GEHL

Form No.
913223
Revision B

CT6-18 Low Profile
CT6-18 Turbo

Telescopic Handlers

Operator's Manual

INTRODUCTION

The information in this Operator's Manual was written to give the owner/operator assistance in preparing, adjusting, maintaining and servicing of the Telescopic Handler. More important, this manual provides an operating plan for safe and proper use of the machine. Major points of safe operation are detailed in the **SAFETY** chapter of this manual.

GEHL Company asks that you read and understand the contents of this manual COMPLETELY and become familiar with the machine before operating it.

The use of this Telescopic Handler is subject to certain hazards that cannot be eliminated by mechanical means, but only by the exercise of intelligence, care and common sense. It is therefore essential to have competent and careful operators, who are not physically or mentally impaired, and who are thoroughly trained in the safe operation of the equipment and the handling of the loads.

Throughout this manual information is provided that is set in *italic* type and introduced by the word **IMPORTANT** or **NOTE.** Be sure to read carefully and comply with the message or directive given. Following this information will improve operating and maintenance efficiency, help to avoid breakdowns and damage, and extend the machine's life. A chart of standard hardware torques is located in the back of this manual.

A storage area is provided on the unit for storing the Operator's Manual. After using the manual, please return it to the storage area and keep it with the unit at all times! If this machine is resold, **GEHL Company** recommends that this manual be given to the new owner.

If this machine was purchased "used," or if the owner's address has changed, please provide your **GEHL** dealer or **GEHL Company** Service Department with the owner's name and current address, along with the machine model and serial number. This will allow the registered owner information to be updated, so that the owner can be notified directly in case of an important product issue, such as a safety update program.

"Right" and "left" are determined from a position sitting on the seat and facing forward.

Our wide dealership network stands ready to provide any assistance needed, including genuine **GEHL** service parts. All parts should be obtained from or ordered through your **GEHL** dealer. Give complete information about the part and include the model and serial number of the machine. Record the serial number in the space provided on page 4 as a handy record for quick reference.

GEHL Company reserves the right to make changes or improvements in the design or construction of any part without incurring the obligation to install such changes on any unit previously delivered.

GEHL Company, in cooperation with the Society of Automotive Engineers, has adopted this

Safety Alert Symbol

to identify potential safety hazards, which, if not properly avoided, could result in injury. When you see this symbol in this manual or on the machine itself, you are reminded to BE ALERT! Your personal safety is involved!

Table of Contents

Chapter	Description	Page

Chapter	Description	Page

IDENTIFICATION INFORMATION

Write the GEHL Telescopic Handler model and serial numbers below.
Refer to these numbers when inquiring about parts or service from your GEHL dealer.

MODEL NO.	
SERIAL NO.	

The model and serial numbers for this machine are on a decal located inside the operator's station.

Chapter 1

SPECIFICATIONS

IDENTIFICATION OF THE TELESCOPIC HANDLER

Because of our policy to promote a continual improvement of our products, our lines of telescopic handlers may undergo certain modifications, without obligation to update units previously delivered.

When ordering parts or when requesting technical information, always specify applicable model and serial numbers.

NOTE: *For the owner's convenience, it is recommended these numbers be recorded in the spaces provided at the time of the delivery of the telescopic handler.*

SERIAL PLATE OF THE TELESCOPIC HANDLER (FIG. A)

- Model _____
- P.I.N. _____
- Net Mass _____
- Capacity _____
- Year of Manufacture _____

For further technical information regarding the telescopic handler, refer to chapter: 3 - SPECIFICATIONS: SPECIFICATIONS.

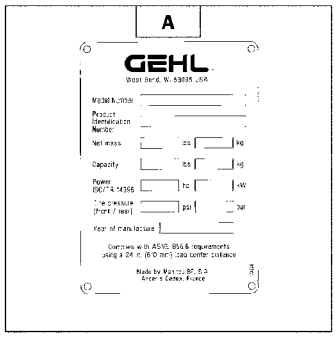

ENGINE (FIG. B)

- Engine No. _____

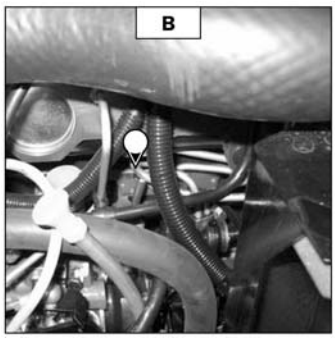

TRANSMISSION (FIG. C)

- Type _____
- Serial No. _____

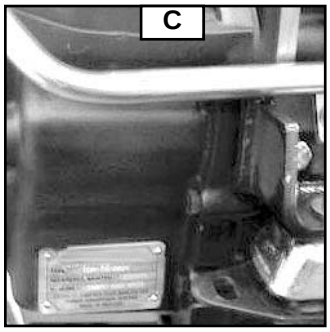

FRONT AXLE (FIG. D)

- Type _____
- Serial No. _____
- Reference No. _____

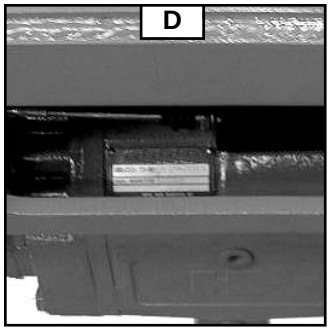

REAR AXLE (FIG. E)

- Type _____
- Serial No. _____
- Reference No. _____

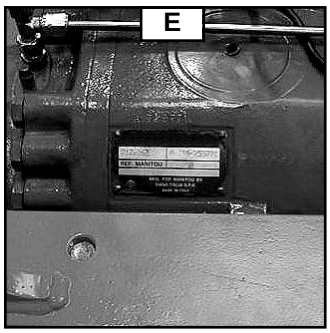

CAB (FIG. F)

- Type _____
- Serial No. _____

BOOM (FIG. G)

- Reference No. _____
- Date of Manufacture _____

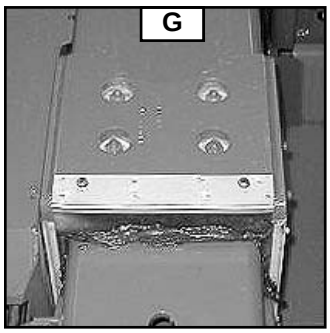

SERIAL PLATE OF THE ATTACHMENT (FIG. H)

- Model _____
- Serial No. _____
- Hydraulic Pressure _____
- Weight _____
- Capacity _____

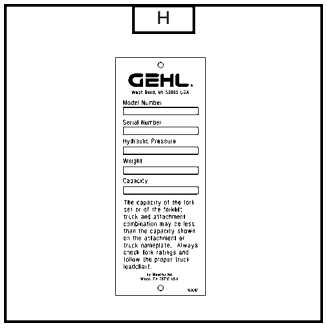

SPECIFICATIONS

ENGINE

Model	CT6-18	CT6-18 Turbo
Type	PERKINS 1104C-44	PERKINS 1104C-44T
- Number of cylinders	4 in line	4 in line
- Number of strokes	4	4
- Suction	Natural	Turbocharged
- Injection system	Direct	Direct
- Ignition sequence	1,3,4,2	1,3,4,2
- Clearance of rocker valve (cold)		
• Inlet	0.78” (20 mm)	0.78” (20 mm)
• Exhaust	1.77” (45 mm)	1.77” (45 mm)
- Capacity	268 cu.in. (4400 cm^3)	268 cu.in. (4400 cm^3)
- Bore	4.13” (105 mm)	4.13” (105 mm)
- Stroke	5” (127 mm)	5” (127 mm)
- Compression ratio	19.3:1	17.5:1
- Nominal loaded rating	2200 rpm	2200 rpm
- Low idle	930 ± 20 rpm	820 ± 10 rpm
- High idle	2400 rpm	2355 rpm
- Power (SAE J1995)	84 hp (63 kW)	101 hp (75 kW)
- Maximum torque	223 ft.-lbs. (302 Nm) at 1400 rpm	304 ft.-lbs. (412 Nm) at 1400 rpm
- Air cleaner	Dry w/safety element	Dry w/safety element

COOLING CIRCUIT

- Type	Water
- Fan	Puller
• Number of blades	10
• Diameter	20” (508 mm)
- Thermostat	
• Start opening	174°F to 183°F (79°C to 84°C)
• Full opening	199°F (93°C)

TRANSMISSION

- Type	TURNER POWERTRAIN SYSTEMS
- Torque converter	SACHS
- Gear box	
• Number of forward speeds	4
• Number of reverse speeds	4
- Gear reverser	Electro-hydraulic

FRONT AXLE

- Type	DANA
- Limited slip differential	45 %
- Hub reducers	Epicyclic

REAR AXLE

- Type	DANA
- Hub reducers	Epicyclic

BRAKE

- Service brake	Foot pedal; Hydraulic brake, applied on the front and rear wheels
• Type	Multidisc brake immersed in oil
- Parking brake	Hand lever applied, mechanical brake on the front wheels
• Type	Multidisc brake immersed in oil

ELECTRIC CIRCUIT

- Ground	Negative
- Battery	12 V - 145 Ah - 950 A EN
- Alternator	12 V - 75 A
• Type	Denso A115i
• Tension regulator	Incorporated into the alternator
- Starter	12 V - 3,0 kW
• Type	Denso E95RL

FRONT AND REAR TIRES

DIMENSIONS	PRESSURE	TIRE LOAD		CONTACT SURFACE PRESS.	CONTACT SURFACE AREA
17,5L X 24 TUBELESS	38 PSI	FRONT NO LOAD	3086 lbs.	18.1 lb./in.^{2}	170 in.^{2}
		FRONT FULL LOAD	8488 lbs.	49.9 lb./in.^{2}	
		REAR NO LOAD	3417 lbs.	20.1 lb./in.^{2}	
		REAR FULL LOAD	1102 lbs.	6.5 lb./in.^{2}	

SPECIFICATIONS

Type of pump	Gear pump with flow divider
Capacity	2.50 cu. in. (41 cm^3)
Pump flow rate	26 gpm (97 L/min)
Pressure	
Lifting, tilting, telescoping, attachment circuit	3770 psi (260 bar)
Steering circuit	2031 psi (140 bar)
Filtration	
Return	10 micron
Suction	125 micron
Travel speed (standard configuration on horizontal ground)	
Forward, no load	21 mph (33 km/h)
Reverse, no load	21 mph (33 km/h)
Standard lift height	18’3” (5.55 m)
Rated capacity (with standard attachment)	6000 lbs. (2721 kg)
Load center	24” (610 mm)
Weight of forks (each)	159 lbs. (72 kg)
Lifting times (boom retracted)	
No load, lifting	6.8 seconds
Rated load, lifting	7.1 seconds
No load, lowering	4.8 seconds
Rated load, lowering	4.7 seconds
Telescoping times	
No load, extending	4.5 seconds
Rated load, extending	4.6 seconds
No load, retracting	2.2 seconds
Rated load, retracting	2.2 seconds
Rearward tilt time, no load	3.3 seconds
Forward tilt time, no load	2.7 seconds
Operating weight with standard attachment	13496 lbs. (6122 kg)
Axle weight with attached equipment (transport position)	
Front, no load	6162 lbs. (2795 kg)
Front, rated load	16909 lbs. (7670 kg)
Rear, no load	6923 lbs. (3140 kg)
Rear, rated load	2127 lbs. (965 kg)
Drawbar pull, rated load	15961 lbf (71 kN)
Breakout force on bucket teeth with tilt cylinder (ISO 14397-2)	9352 lbf (41.6 kN)

FRONT AND REAR TIRES

DIMENSIONS	PRESSURE	TIRE LOAD		CONTACT SURFACE PRESS.	CONTACT SURFACE AREA
15-19,5 NHS 12PR TUBELESS	55 PSI	FRONT NO LOAD FRONT FULL LOAD REAR NO LOAD REAR FULL LOAD	3086 lbs. 8488 lbs. 3417 lbs. 1102 lbs.	25.7 lb./in.^{2} 70.7 lb./in.^{2} 28.5 lb./in.^{2} 9.2 lb./in.^{2}	120 in.^{2}

SPECIFICATIONS

Type of pump	Gear pump with flow divider
Capacity	2.50 cu. in. (41 cm^3)
Pump flow rate	24 gpm (89 L/min)
Pressure	
Lifting, tilting, telescoping, attachment circuit	3770 psi (260 bar)
Steering circuit	2031 psi (140 bar)
Filtration	
Return	10 micron
Suction	125 micron
Travel Speed (standard configuration on horizontal ground)	
Forward, no load	18 mph (29 km/h)
Reverse, no load	18 mph (29 km/h)
Standard lift height	17’ 11” (5.46 m)
Rated capacity (with standard attachment)	6000 lbs. (2721 kg)
Load center	24” (610 mm)
Weight of forks (each)	137 lbs. (62 kg)
Lifting times (boom retracted)	
No load, lifting	7.2 seconds
Rated load, lifting	7.4 seconds
No load, lowering	5.1 seconds
Rated load, lowering	5.0 seconds
Telescoping times	
No load, extending	4.7 seconds
Rated load, extending	4.8 seconds
No load, retracting	2.4 seconds
Rated load, retracting	2.4 seconds
Rearward tilt time, no load	3.3 seconds
Forward tilt time, no load	2.7 seconds
Operating weight with standard attachment	12996 lb. (5895 kg)
Axle weight with attached equipment (transport position)	
Front, no load	6239 lbs. (2830 kg)
Front, rated load	16987 lbs. (7705 kg)
Rear, no load	6923 lbs. (3140 kg)
Rear, rated load	2127 lbs. (965 kg)
Breakout force on bucket teeth with tilt cylinder (ISO 14397-2)	9577 lbf (42.6 kN)

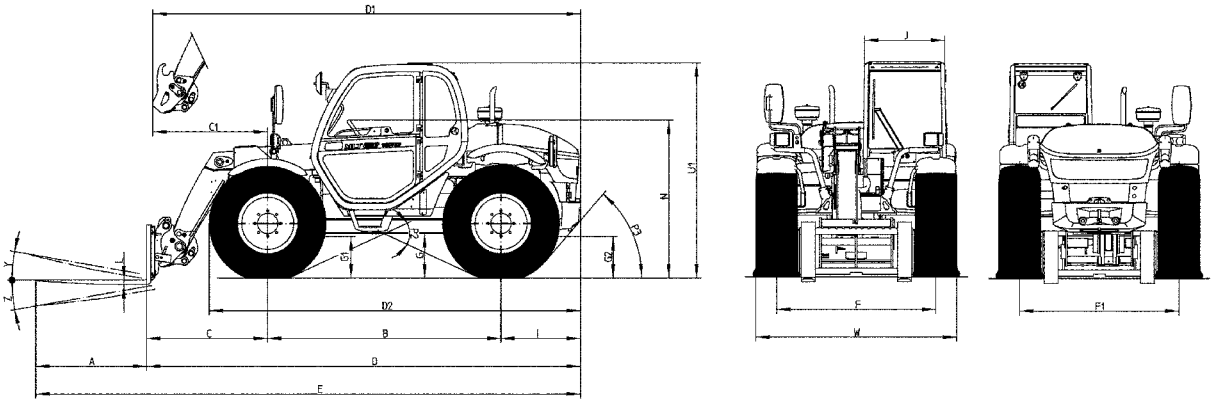

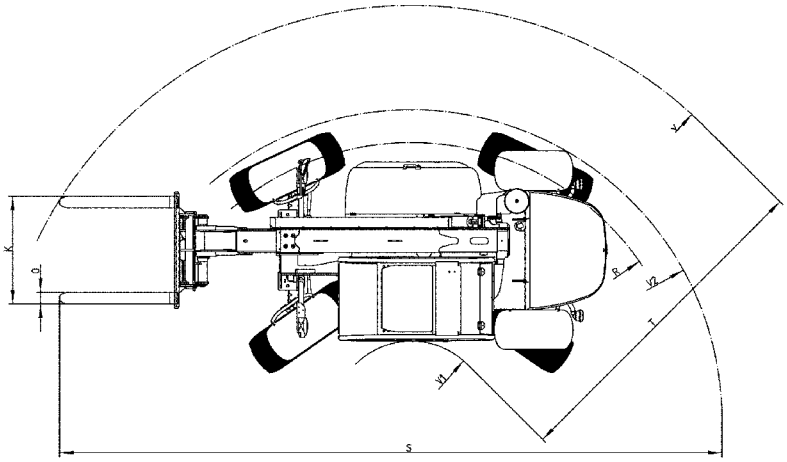

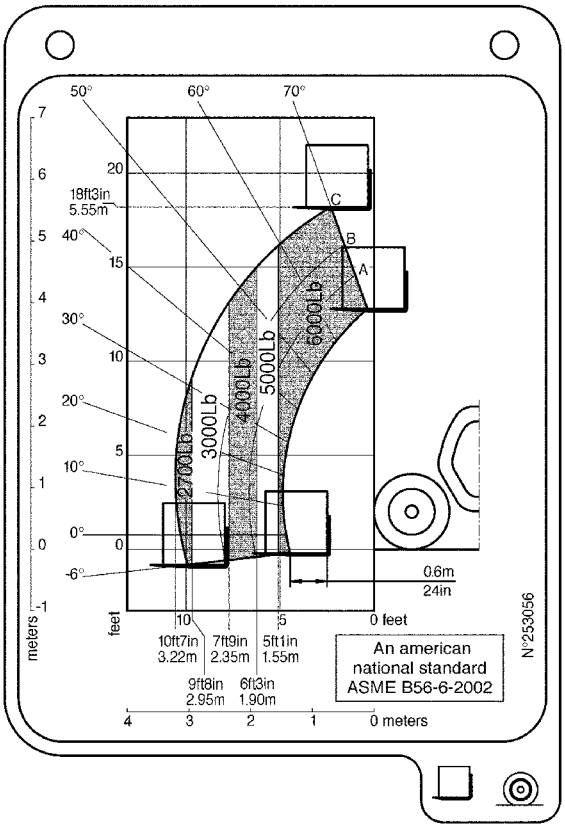

A	3’ 11” (1200 mm)
B	8’ 4” (2520 mm)
C	4’ 3” (1307 mm)
C1	4’ 2” (1260 mm)
D	15’ 5” (4699 mm)
D1	15’ 3” (4640 mm)
D2	13’ 1” (3980 mm)
E	19’ 4” (5887 mm)
F	5’ 8” (1720 mm)
F1	5’ 8” (1720 mm)
G	1’ 7” (490 mm)
G1	1’ 6” (455 mm)
G2	1’ 6” (455 mm)
I	2’ 9” (860 mm)
J	2’ 10” (866 mm)
K	4’ 2” (1260 mm)
L	1 3/4” (45 mm)
N	5’ 5”/5’ 7”(1655/1695 mm)
O	5” (125 mm)
P2	50°
P3	49°
R	10’ 10” (3310 mm)
S	24’ 4” (7417 mm)
T	10’ 7” (3230 mm)
U1	7’ 7” (2300 mm)
V	15’ 4” (4680 mm)
V1	4’ 9” (1450 mm)
V2	12’ 2” (3708 mm)
W	6’ 11” (2108 mm)
Y	11.8°
Z	142.3°

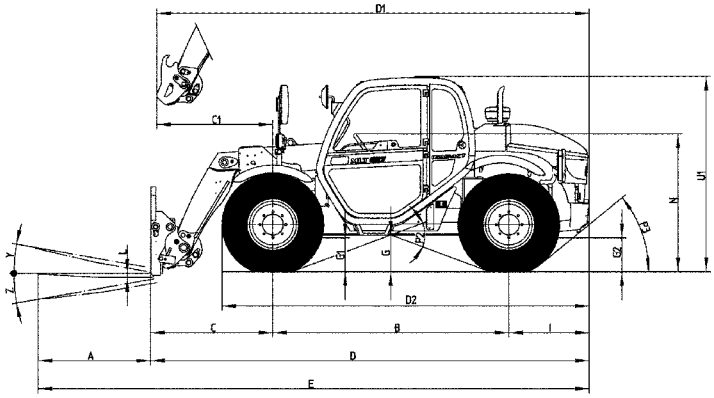

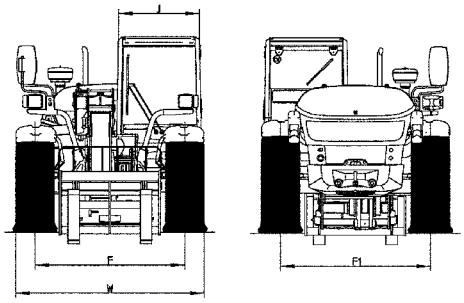

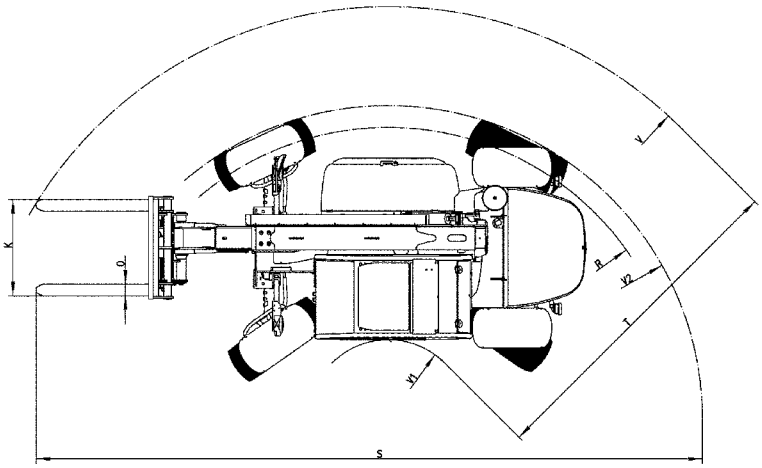

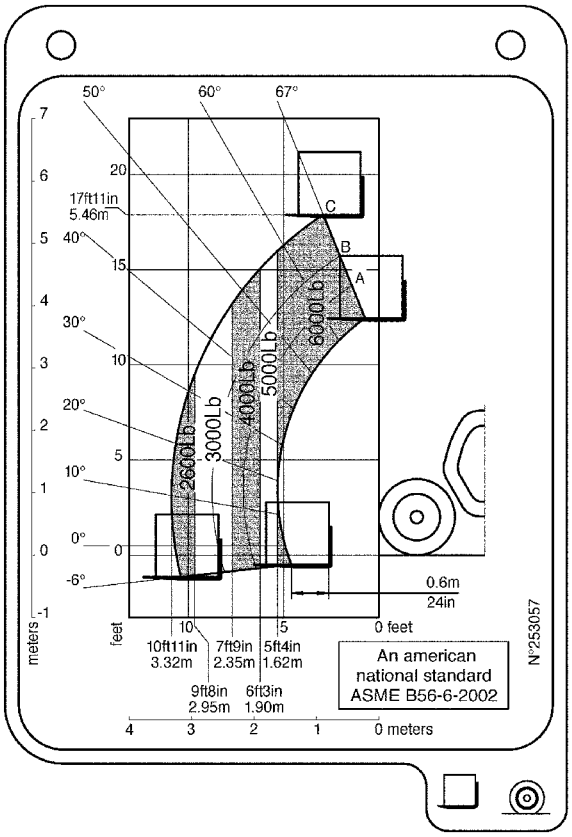

A	3’ 11” (1200 mm)
B	8’ 3” (2520 mm)
C	4’ 3” (1307 mm)
C1	4’ 2” (1260 mm)
D	15’ 5” (4687 mm)
D1	15’ 3”” (4640 mm)
D2	12’ 8” (3870 mm)
E	19’ 4” (5887 mm)
F	6’ 3” (1600 mm)
F1	6’ 3” (1600 mm)
G	1’ 4” (400 mm)
G1	1’ 2” (365 mm)
G2	1’ 2” (365 mm)
I	2’ 9” (860 mm)
J	2’ 10” (866 mm)
K	3’ 5” (1040 mm)
L	1 3/4” (45 mm)
N	4’ 8”/4’ 9”(1415/1455 mm)
O	5” (125 mm)
P2	41°
P3	39°
R	10’ 8” (3250 mm)
S	24’ 1” (7352 mm)
T	10’ 7” (3215 mm)
U1	6’ 11” (2108 mm)
V	15’ 2” (4615 mm)
V1	4’ 7” (1400 mm)
V2	11’ 10” (3609 mm)
W	6’ 7” (2010 mm)
Y	11.8°
Z	142.3°

Chapter 2

CHECKLISTS

PRE-DELIVERY

The following Checklist is an important reminder of inspections that MUST be made before delivering the Telescopic Handler to the customer. Check off each item after prescribed action is taken.

✔ Check that:

- ❑ No parts of machine have been damaged in shipment. Check for such things as dents and loose or missing parts; correct or replace components as required.
- ❑ Battery is securely mounted and not cracked. Cable connections are tight. Electrolyte at proper level.
- ❑ Cylinders, hoses and fittings are not damaged, leaking or loosely secured.
- ❑ Oil, fuel and air filters are not damaged, leaking or loosely secured.
- ❑ All grease fittings have been properly lubricated and no fittings are missing; see MAINTENANCE chapter of this manual.
- ❑ Wheel nuts are torqued to 465 ft-lbs (630 Nm).
- ❑ Tires are inflated to specified pressure cold.
- ❑ Hydraulic system reservoir, engine crankcase, engine coolant, transmission and axles are filled to the proper operating fluid levels.
- ❑ All adjustments have been made to comply with the settings given in this manual and in the separate engine manual.
- ❑ All guards, shields and decals are in place and securely attached.
- ❑ Model and serial numbers for this unit are recorded in space provided on this page and page 4.

Start the machine and test-run the unit while checking that proper operation is exhibited by all controls.

✔ Check that:

- ❑ All indicators (lamps, switches, etc.) function properly.
- ❑ All hand and foot controls operate properly.
- ❑ Boom, Quick-attach System with attachment tool and frame level control all function properly.
- ❑ No hydraulic system leaks when under pressure.
- ❑ Listen for abnormal noises or vibrations; if detected, determine their cause and repair as necessary.

I acknowledge that pre-delivery procedures were performed on this unit as outlined above.

_____
Dealership's Name

_____
Dealer Representative's Name

_____
Date Checklist Filled Out

_____
Machine Model # Machine Serial # Engine Serial #

DELIVERY

The following Checklist is an important reminder of valuable information that MUST be passed on to the customer at the time the unit is delivered. Check off each item as you explain it to the customer.

✔ Check that:

- ❑ Review with the customer the contents of the AEM SAFETY MANUAL and this manual for the following:
- ❑ The INDEX at the back, for quickly locating topics.
- ❑ The SAFETY and OPERATING AND SAFETY INSTRUCTIONS chapters for information regarding safe use of the machine.
- ❑ The MAINTENANCE chapter for information regarding proper maintenance of the machine. Explain that regular lubrication and maintenance are required for continued safe operation and long life.
- ❑ Give this Operator's Manual and the AEM Safety Manual to the customer and instruct them to be sure to read and completely understand their contents before operating the unit.
- ❑ Explain that the customer must consult the engine manual (provided) for related specifications, operating adjustments and maintenance instructions.
- ❑ Completely fill out the Owner's Registration, including customer's signature, and return it to the Company.

_____
Customer's Signature

_____
Date Delivered

(Dealer's File Copy - Remove at Perforation)

INTENTIONALLY BLANK

(To be removed as Dealer's file copy)

Chapter 2

CHECKLISTS

PRE-DELIVERY

The following Checklist is an important reminder of inspections that MUST be made before delivering the Telescopic Handler to the customer. Check off each item after prescribed action is taken.

✔ Check that:

- ❑ No parts of machine have been damaged in shipment. Check for such things as dents and loose or missing parts; correct or replace components as required.
- ❑ Battery is securely mounted and not cracked. Cable connections are tight. Electrolyte at proper level.
- ❑ Cylinders, hoses and fittings are not damaged, leaking or loosely secured.
- ❑ Oil, fuel and air filters are not damaged, leaking or loosely secured.
- ❑ All grease fittings have been properly lubricated and no fittings are missing; see MAINTENANCE chapter of this manual.
- ❑ Wheel nuts are torqued to 465 ft-lbs (630 Nm).
- ❑ Tires are inflated to specified pressure cold.
- ❑ Hydraulic system reservoir, engine crankcase, engine coolant, transmission and axles are filled to the proper operating fluid levels.
- ❑ All adjustments have been made to comply with the settings given in this manual and in the separate engine manual.
- ❑ All guards, shields and decals are in place and securely attached.
- ❑ Model and serial numbers for this unit are recorded in space provided on this page and page 4.

Start the machine and test-run the unit while checking that proper operation is exhibited by all controls.

✔ Check that:

- ❑ All indicators (lamps, switches, etc.) function properly.
- ❑ All hand and foot controls operate properly.
- ❑ Boom, Quick-attach System with attachment tool and frame level control all function properly.
- ❑ No hydraulic system leaks when under pressure.
- ❑ Listen for abnormal noises or vibrations; if detected, determine their cause and repair as necessary.

I acknowledge that pre-delivery procedures were performed on this unit as outlined above.

_____
Dealership's Name

_____
Dealer Representative's Name

_____
Date Checklist Filled Out

_____
Machine Model # Machine Serial # Engine Serial #

DELIVERY

The following Checklist is an important reminder of valuable information that MUST be passed on to the customer at the time the unit is delivered. Check off each item as you explain it to the customer.

✔ Check that:

- ❑ Review with the customer the contents of the AEM SAFETY MANUAL and this manual for the following:
- ❑ The INDEX at the back, for quickly locating topics;
- ❑ The SAFETY and OPERATING AND SAFETY INSTRUCTIONS chapters for information regarding safe use of the machine.
- ❑ The MAINTENANCE chapter for information regarding proper maintenance of the machine. Explain that regular lubrication and maintenance are required for continued safe operation and long life.
- ❑ Give this Operator's Manual and the AEM Safety Manual to the customer and instruct them to be sure to read and completely understand their contents before operating the unit.
- ❑ Explain that the customer must consult the engine manual (provided) for related specifications, operating adjustments and maintenance instructions.
- ❑ Completely fill out the Owner's Registration, including customer's signature, and return it to the Company.

_____
Customer's Signature

_____
Date Delivered

(Pages 13 and 14 have been removed at perforation)

Chapter 3

SAFETY

GENERAL INSTRUCTIONS

Before operating this equipment, read and study the following safety information. In addition, be sure that everyone who operates or works with this equipment, is familiar with these safety precautions.

WHENEVER YOU SEE THIS SYMBOL:

IT MEANS: WARNING! BE CAREFUL! YOUR SAFETY OR THE SAFETY OF THE TELESCOPIC HANDLER IS AT RISK.

WARNING

The risk of accident while using, servicing and repairing the telescopic handler can be minimized by following the safety warnings and instructions detailed in this manual.

Gehl Company has ensured that this telescopic handler is suitable for use under normal operating conditions defined in this Operator's Manual and in accordance with safety standard ANSI/ASME B56.6.

Before using the telescopic handler, the owner must make sure that the telescopic handler is appropriate for the work to be done.

In addition to standard equipment mounted on the telescopic handler, many options are available, such as: flashing lights, front light, rear light, light at the boom head, etc.

The operator must take into account the operating conditions to determine the necessary signalling and lighting equipment. Contact your dealer for information.

GEHL Company always takes the operator's safety into consideration when designing its machinery, and guards exposed moving parts for his/her protection. However, some areas cannot be guarded in order to assure proper operation. Further, this Operator's Manual and decals on the machine warn of additional hazards and should be read and observed closely.

It is the owner's responsibility for communicating information on the safe use and proper maintenance of this machine! This includes providing understandable interpretations of these instructions to operators who are not fluent in reading English.

DANGER

"DANGER" indicates an imminently hazardous situation which, if not avoided, will result in death or serious injury.

WARNING

"WARNING" indicates a potentially hazardous situation which, if not avoided, could result in death or serious injury.

CAUTION

"CAUTION" indicates a potentially hazardous situation which, if not avoided, may result in minor or moderate injury. It may also alert users to unsafe practices.

It is the responsibility of the operator to read and understand the Operator's Manual and other information provided, and to use correct operating procedures. Machines should be operated only by qualified operators.

MANDATORY SAFETY SHUTDOWN PROCEDURE

BEFORE cleaning, adjusting, lubricating or servicing the unit:

1. **Stop machine on a level surface. (Avoid parking on a slope, but if necessary, park across the slope and block the tires.)**
2. **Fully retract the boom and lower the attachment tool to the ground. Idle engine for gradual cooling.**
3. **Place controls in neutral and apply parking brake.**
4. **Shut off the engine and remove the key.**

ONLY when you have taken these precautions can you be sure it is safe to proceed. Failure to follow the above procedure could lead to death or serious bodily injury.

WARNING

U.S. OSHA regulations require employers in general industry and the construction, shipyard and cargo-handling industries (excepting agricultural operations) to ensure that forklift operators are competent, as demonstrated by successful completion of a training course.

The training course must consist of a combination of formal instruction and practical training, including both forklift-related and workplace-related topics, and evaluation of the operator's performance in the workplace.

All operator training and evaluation is to be conducted by persons who have the knowledge, training and experience to train and evaluate operators.

WARNING

ALWAYS maintain a safe distance from electric power lines and avoid contact with any electrically charged conductor or gas line. It is not necessary to make direct contact with a power line for power to ground through the structure of the machine. Keep the boom at least 10 ft. (3 m) from all power lines. Accidental contact or rupture can result in electrocution or an explosion. Contact the North American One-Call Referral System at (888) 258-0808 for the local "Digger's Hotline" number or proper local authorities for utility line locations BEFORE starting to dig!

WARNING

The telescopic handler is designed for outdoor use under normal atmospheric conditions, and indoor use in suitably ventilated premises.

It is prohibited to use the telescopic handler in areas where there is a risk of fire or potentially explosive materials (e.g., refineries, fuel or gas depots, stores of flammable products) For use in these areas, specificly approved equipment is available. (Ask your dealer for information.)

SAFETY REMINDERS

- User/operator safety practices, as established by industry standards, are included in this Operator's Manual and intended to promote safe operation of the machine. These guidelines do not, of course, preclude the use of good judgment, care and common sense, as may be indicated by the particular jobsite work conditions.
- It is essential that operators be physically and mentally free of mind-altering drugs and chemicals, and thoroughly trained in the safe operation of the machine. Such training should be presented completely to all new operators and not condensed for those claiming previous experience. Information on operator training is available from several sources, including the manufacturer.

- Some illustrations used in this manual may show doors, guards and shields open or removed for illustration purposes ONLY. BE SURE that all doors, guards and shields are in their proper operating positions before starting the engine.
- Only the operations and actions described in this operator's manual may be performed. The manufacturer cannot predict all possible risky situations. Consequently, the safety instructions in this operator's manual and on the telescopic handler itself are not 100% exhaustive, and operators must always consider the possible risks to themselves, to others and to the telescopic handler itself.
- A telescopic handler operating in an area without fire extinguishing equipment must be equipped with an individual extinguisher.

WARNING

Failure to follow the safety and operating instructions, and the instructions for repairing and servicing the telescopic handler may lead to serious, or even fatal accidents.

OPERATOR INSTRUCTIONS

A - OPERATOR'S MANUAL

- Read the operator's manual carefully.
- The operator's manual must always be in good condition and in the place provided for it on the telescopic handler.
- Report any warning decals that are no longer legible.

B - AUTHORIZATION FOR USE

- Only qualified, trained and authorized personnel may use the telescopic handler. This authorization is given by the appropriate person in the company in charge of using the telescopic handler.
- The operator is not allowed to authorize the use of the telescopic handler by another person.

WARNING

There are a number of possible situations in which operating the telescopic handler is not allowed. Such abnormal uses are strictly forbidden. For example:

- Abnormal behavior resulting from carelessness.

- Behavior resulting from “doing it the easy way” when performing a task.

- Operation by such persons as: teenagers, handicapped persons, trainees tempted to drive a telescopic handler, and operators tempted to operate in a manner to win a bet, in competition or for their own personal experience.

The person in charge of the equipment must take these possibilities into account when assessing whether or not a person will make a suitable operator.

C - MAINTENANCE

WARNING

The telescopic handler must be inspected periodically to ensure that it remains in good operating condition. The frequency of inspections is determined by usage and regulations of the country and state/province in which the telescopic handler is used.

- The operator must immediately advise his supervisor if the telescopic handler is not in good working condition.
- NEVER use your hands to search for hydraulic fluid leaks. Instead use a piece of paper or cardboard. Escaping fluid under pressure can be invisible and can penetrate the skin, causing serious injury. If any fluid is injected into your skin, see a doctor at once. Injected fluid MUST be surgically removed by a doctor familiar with this type of injury or gangrene may result.
- ALWAYS wear safety glasses with side shields when striking metal against metal. In addition, it is recommended that a softer (chip-resistant) material be used to cushion the blow. Failure to heed could lead to serious injury to the eyes or other parts of the body.

- Avoid lubrication or mechanical adjustments with the machine in motion or the engine running. If the engine must be running to make certain adjustments, position the equipment in a safe position, place the transmission in neutral, apply the parking brake, securely block the tires and use extreme caution.
- The operator is prohibited from performing any repairs or adjustments unless he/she has been trained for this purpose.
- The operator must keep the telescopic handler properly cleaned.
- The operator must carry out daily maintenance (see: chapter: 6 - MAINTENANCE: A - DAILY OR EVERY 10 HOURS SERVICE) if this is among his/her responsibilities.
- The operator must ensure the tires are suitable for the nature of the ground (see contact surface area of the tires in chapter: 1 - SPECIFICATIONS: CHARACTERISTICS). Consult your dealer regarding: flotation tires, traction tires, snow chains.

WARNING

Do not use the telescopic handler if the tires are incorrectly inflated, damaged or excessively worn, because this could put the operator's safety or that of others at risk, or cause damage to the telescopic handler. The fitting of foam-filled tires is prohibited and is not warranted by the manufacturer without prior authorization.

- To ensure continued safe operation, replace damaged or worn-out parts with genuine GEHL service parts before using this equipment.

D - MODIFICATION OF THE TELESCOPIC HANDLER

- Modifications and additions that affect capacity or safe operation must never be performed without the manufacturer's prior written approval. Where such authorization is granted, any applicable markings are to be changed accordingly.
- All attachment tools MUST be marked to identify the attachment tool and the total capacity with the attachment tool at maximum elevation with the load laterally centered.
- Be sure all nameplates, warnings and instruction markings are in place and legible. Local government regulations may require specific equipment, which is the responsibility of the owner to provide.
- For the safety of the operator and others, do not change the structure or settings of the various components used in the telescopic handler (hydraulic pressure, calibrating limits, engine speed, addition of extra equipment, addition of counterweight, unapproved attachments, alarm systems, etc.). In this event, the manufacturer cannot be held responsible.

E - SAFETY GUARDS AND WARNING DEVICES

- This machine is fitted with a Roll-Over Protective Structure (ROPS) and Falling Object Protective Structure (FOPS) in accordance with industry standards. It is intended to offer protection to the operator from falling objects and in case of an overturn, but it cannot protect against every possible hazard. Therefore, it should not be considered a substitute for good judgment and safe practices in operating the machine. If the ROPS / FOPS structure is damaged, it must be replaced to restore the protection it provides.

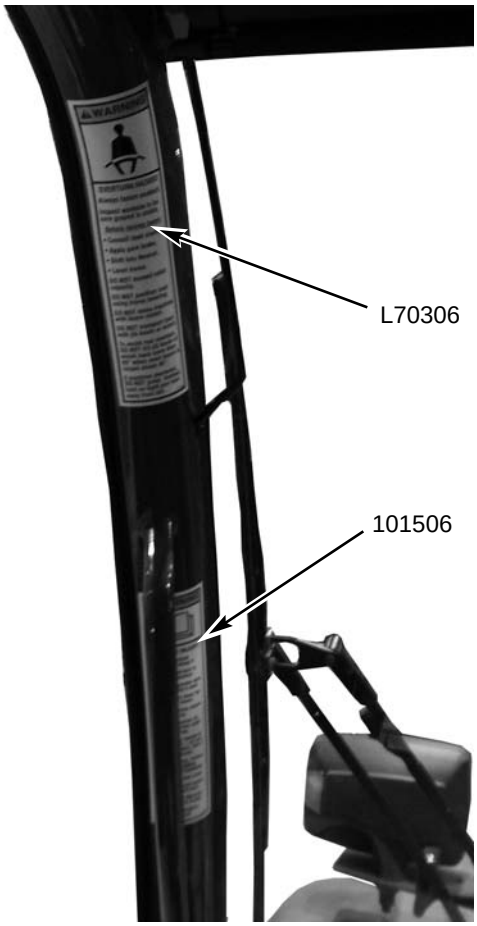
L70306
101506

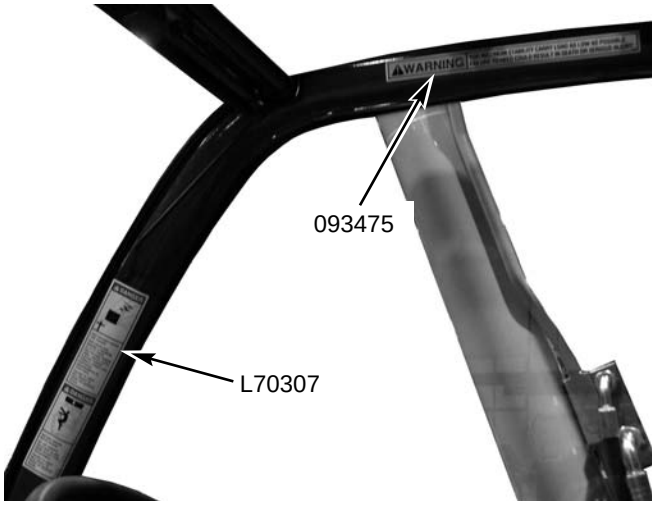
WARNING
093475
L70307

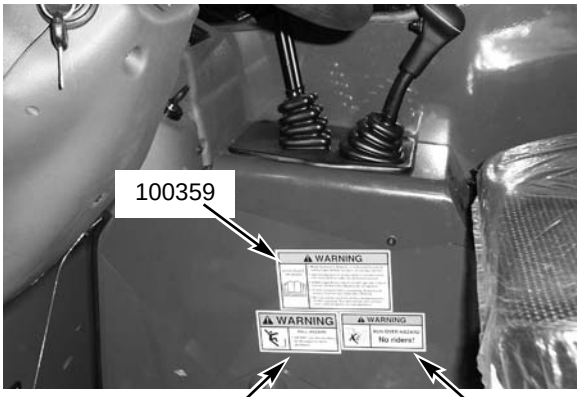
100359
WARNING
WARNING
WARNING
No riders!
L65928
L65932

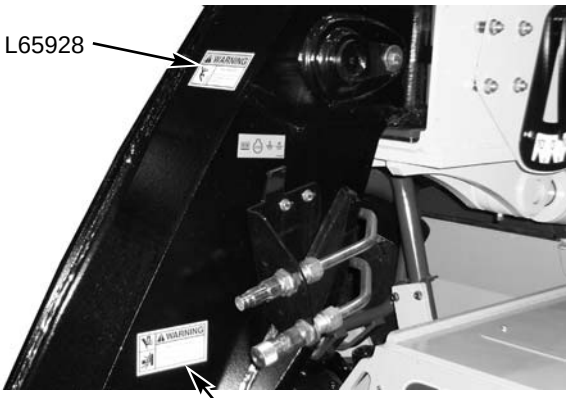
L65928
WARNING
WARNING
L65927

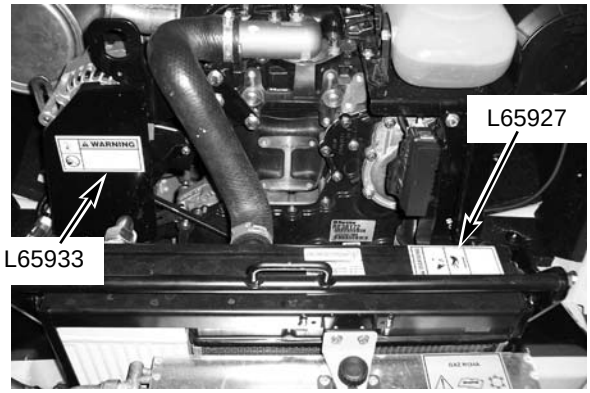
WARNING
L65927
L65933

101506

WARNING

TO AVOID INJURY

Inspect machine before operating it.

Be sure work tool is securely attached.

Start and operate only from operator's seat.

Use 2-wheel steer for high speed travel.

Be sure backup alarm is functioning.

Look in direction of travel and clear path before moving.

DO NOT use hands to find oil leak -- oil can inject into skin. See a doctor if injured.

Before exiting, follow Mandatory Safety Shutdown Procedure:

1) Stop in level area;

2) Fully retract boom, lower work tool;

3) Shift into Neutral, apply park break;

4) Shut off engine, remove key.

101506

L70306

WARNING

OVERTURN HAZARD

Always fasten seatbelt.

Inspect worksite to be sure ground is stable.

Before raising boom:

- Consult load charts,
- Apply park brake,
- Shift into Neutral,
- Level frame.

DO NOT exceed rated capacity.

DO NOT position load using frame leveling.

DO NOT move machine with boom raised.

DO NOT transport load with jib boom or winch.

To avoid rear overturn, DO NOT tilt jib boom or winch back more than 45° when main boom is raised above 45°.

If machine overturns, DO NOT jump. Instead, hold on tight and lean away from fall.

L70306

L70307

DANGER

HIGH VOLTAGE POWER LINE HAZARD.

KEEP BOOM AND MACHINE A MINIMUM OF 10 FT. FROM HIGH VOLTAGE POWER LINES. CHECK LOCAL ELECTRIC POWER COMPANY CODES FOR ADDITIONAL REQUIREMENTS IN YOUR AREA.

FAILURE TO HEED WILL RESULT IN DEATH OR SERIOUS INJURY.

DANGER

MACHINE MOVING PARTS HAZARD.

DO NOT REMOVE RIGHT SIDE GLASS PANEL EXCEPT FOR REPLACEMENT.

FAILURE TO HEED WILL RESULT IN DEATH OR SERIOUS INJURY.

L70307

100359

WARNING

AVOID INJURY OR DEATH

- Read Operator's Manual (in seat pouch) and all safety signs before using or servicing machine.
- Owner/employer is responsible to ensure users are instructed on safe use and maintenance.
- OSHA regulations require forklift operators to be trained, tested and judged to be competent.
- Check machine before operating, inspect and service machine per Operator's Manual.
- Do not modify machine without manufacturer's written approval. For information and service parts, contact dealer (or manufacturer).

100359

L65928

WARNING

FALL HAZARD

- DO NOT use this machine to lift people or work platforms.

L65928

L65932

WARNING

RUN-OVER HAZARD

No riders!

L65932

WARNING

RUN-OVER HAZARD

- DO NOT bypass starter solenoid.
- Follow jump-starting procedure in Operator's Manual.

L65933

L65933

L65924

WARNING

- Keep hands away when engine is running.
- Stop engine and allow it to cool before servicing.

L65924

WARNING

PINCH POINT HAZARD

- Keep clear when engine is running.
- Follow Mandatory Safety Shutdown Procedure before servicing.

L65927

L65927

093475

WARNING FOR MAXIMUM STABILITY CARRY LOAD AS LOW AS POSSIBLE. FAILURE TO HEED COULD RESULT IN DEATH OR SERIOUS INJURY.

093475

Chapter 4

OPERATING AND SAFETY INSTRUCTIONS

A - BEFORE STARTING THE TELESCOPIC HANDLER

- Perform daily maintenance (see chapter: 6 - MAINTENANCE: A - DAILY OR EVERY 10 HOURS SERVICE).
- Make sure the lights, indicators and windshield wipers are working properly.
- Make sure the rearview mirrors are in good condition, clean and properly adjusted.
- Make sure the horn works.
- Check brakes, steering, and hydraulic system prior to starting operation. Operate all controls to ensure proper operation. Observe all gauges and indicators for proper operation. If any malfunctions are found, correct the cause prior to using the machine.
- ALWAYS wear appropriate personal protective equipment for the job and working conditions. Hard hats, goggles, protective shoes, gloves, reflector-type vests, respirators and ear protection are exampes of types of equipment that may be required. DO NOT wear loose-fitting clothing, long hair, jewelry or loose personal items while operating or servicing the machine.
- ALWAYS check the job site for terrain hazards, obstructions and people. Remove all objects that do not belong in or on the machine and its equipment.
- Walk around the machine and warn all personnel who may be servicing the machine or who are in the machine's path prior to starting. DO NOT start until all personnel are clearly away from the machine.

B - OPERATOR INSTRUCTIONS

- Whatever his/her experience, the operator is advised to familiarize himself/herself with the location and operation of all the controls and instruments before operating the telescopic handler.
- Wear clothes suited for operating the telescopic handler. Avoid loose clothing.
- Make sure you have the appropriate personal protective equipment for the job.
- Prolonged exposure to high noise levels may cause hearing problems. It is recommended to wear ear muffs to protect against excessive noise.
- Always keep alert when using the telescopic handler. Do not listen to the radio or music using headphones or earphones.
- Never operate the telescopic handler when hands or feet are wet or soiled with greasy substances.
- For increased comfort, ensure that the seat is adjusted to your requirements and in the correct position.

WARNING

DO NOT adjust the seat while the telescopic handler is moving.

- The operator must always be in the normal position in the cab. It is prohibited to have arms, legs or any part of the body protruding from the cab of the telescopic handler.
- The seat belt must be worn and adjusted to the operator's size.
- The controls must never be used for anything except their intended purposes (e.g., climbing onto or down from the telescopic handler).
- If a control is equipped with a locking device, it is forbidden to leave the cab without first locking the control in neutral.
- It is prohibited to carry passengers either on the telescopic handler or in the cab.

C - ENVIRONMENT

- Comply with all work site safety rules.
- If the telescopic handler must be used in a dark area or at night, make sure it is equipped with working lights.
- During operation, make sure that no one is in the way of the telescopic handler and its load.
- Do not allow anybody to come near the work area of the telescopic handler or pass under an elevated load.

- When using the telescopic handler on a side slope, before lifting the boom, follow the instructions given in the paragraph: INSTRUCTIONS FOR HANDLING A LOAD: M - TRANSVERSE ATTITUDE OF THE TELESCOPIC HANDLER.
- Travelling on a longitudinal slope :
  - Drive and brake gently.
  - Moving without a load: Forks or attachment facing downhill.

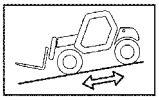

  - Moving with a load: Forks or attachment facing uphill.

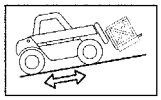

- Never move onto a trailer without having first checked:
  - That it is suitably positioned and made fast.
  - That the unit to which it is connected (wagon, truck, etc.) will not shift.
  - That the trailer is suitable for the total weight of the telescopic handler.
  - That the trailer is suitable for the size of the telescopic handler.
- Never move onto a bridge, floor or elevator, without being certain that it is suitable for the weight and size of the telescopic handler and without having checked that it is in good condition.
- Be careful in the area of loading bays, trenches, scaffolding, soft ground and manholes.
- Make sure the ground is stable and firm under the wheels and/or stabilizers before lifting or removing the load. If necessary, add sufficient wedging under the stabilizers, if equipped.
- Make sure that the scaffolding, loading platform, pilings or ground is capable of bearing the load.
- Never stack loads on uneven ground, because they may tip over.
- In the case of work near power lines, ensure that the safety distance is sufficient between the work area of the telescopic handler and the power lines.

WARNING

You could be electrocuted or seriously injured if you operate or park the telescopic handler too close to power lines. Consult your local utilities.

WARNING

In the event of high winds, do not perform work that jeopardizes the stability of the telescopic handler and its load, particularly if the load can be affected by the wind.

D - VISIBILITY

- Maintain good visibility throughout the route. In reverse, either look directly behind or use the rearview mirrors. In any case, avoid driving in reverse over long distances.
- Visibility may be reduced on the right side when the boom is raised, so before lifting the boom make sure that the movement can be made in complete safety.
- If the forward visibility is not sufficient because of the bulkiness of the load, drive in reverse. This movement must be an exception and only done for short distances.
- Ensure good visibility (clean windows, adequate lighting, correctly adjusted rearview mirrors, etc.).
- If visibility of the road is inadequate, ask someone to help, standing outside the area in which the machine will be moving, and making sure you always have a good view of this person.

E - STARTING THE TELESCOPIC HANDLER

WARNING

The telescopic handler must only be started or moved when the operator is sitting in the cab with the seat belt fastened and adjusted.

- Never try to start the telescopic handler by pushing or towing it. Such operation may cause severe damage to the transmission. If it's necessary to tow the telescopic handler in an emergency, the transmission must be placed in neutral (see chapter: 6 - MAINTENANCE: G - PERIODIC MAINTENANCE).
- Check for closing and locking of covers.
- Make sure that the forward/reverse lever is in neutral.

- Turn the ignition key to position “I” to activate the electrical system.
- Make sure the signal lights on the instrument panel and fuel level indicators are working properly (see chapter: 5 - INSTRUMENTS AND CONTROLS: 3 - CONTROL AND SIGNAL LAMP PANEL).
- Turn the ignition key to position “II” to preheat for 15 seconds and then turn the ignition key fully; the engine should then start. Release the ignition key and let the engine run at idle.
- Do not engage the starter motor for more than 15 seconds. Carry out the preheating for 10 seconds between unsuccessful attempts.
- Make sure all the signal lamps on the instrument panel are off.
- Check all instruments when the engine is warm and at regular intervals during use, to detect any faults and be able to correct them without delay.
- If an instrument does not show the correct display, stop the engine and immediately carry out the necessary corrections.

WARNING

The electrolyte in the battery may produce an explosive gas. Avoid open flames and sparks close to the batteries. Never disconnect a battery while it is charging.

Failure to ensure proper polarity between batteries can cause serious damage to the electrical circuit.

Jump-Starting Procedure

If the battery becomes discharged or does not have enough power to start the engine, use jumper cables and the following procedure to jump-start the engine.

If using a jumper battery for start-up, use a battery with the same voltage and ensure proper polarity when connecting it.

IMPORTANT: *BE SURE that the jumper battery is also a 12-volt D. C. battery, and the vehicle used for jump starting has a negative-ground electrical system.*

WARNING

The ONLY safe method for jump-starting a disharged battery is for TWO PEOPLE to perform the following procedure. The second person is needed for removing the jumper cables so that the operator does not have to leave the operator’s compartment while the engine is running. NEVER connect the jumper cables directly to the starter solenoid of either engine. DO NOT start the engine from any position other than the operator’s seat, and then ONLY after making sure all controls are in “neutral.”

Closely follow the jump-start procedures, in the order listed, to avoid personal injury. In addition, wear safety glasses to protect your eyes, and avoid leaning over the batteries while jump-starting.

DO NOT attempt to jump-start the machine if the battery is frozen, because this may cause it to rupture or explode.

1. Turn the keyswitches on both vehicles to “OFF.” Be sure that both vehicles are in “neutral” and not touching.
2. Connect one end of the positive (+) jumper cable to the positive (+) battery terminal on the disabled machine first. DO NOT allow the positive (+) jumper cable clamps to touch any metal other than the positive (+) battery terminals. Connect the other end of the positive jumper cable to the jumper battery positive (+) terminal.
3. Connect one end of the negative (-) jumper cable to the jumper battery negative (-) terminal.
4. Make the final negative (-) jumper cable connection to the disabled machine’s engine block or frame (ground) -- NOT to the disabled battery negative post. If making the connection to the engine, keep the jumper clamp away from the battery, fuel lines, or moving parts.

NOTE: *Twist the jumper cable clamps on the battery terminals to ensure a good electrical connection.*

5. Proceed to start the machine. If it does not start immediately, start the jumper vehicle engine to avoid excessive drain on the booster battery.

6. After the machine is started and running smoothly, have the second person remove the jumper cables (negative (-) jumper cable first) from the jumper vehicle battery, and then from the disabled machine, while ensuring NOT to short the two cables together.

Allow sufficient time for the alternator to build up a charge in the battery before operating the machine or shutting off the engine.

NOTE: *If the battery frequently becomes discharged, have the battery checked for possible dead cells, or troubleshoot the electrical system for possible short circuits or damaged wire insulation.*

F - OPERATING THE TELESCOPIC HANDLER

WARNING

Operators must always consider the risks involved in using the telescopic handler, in particular:

- **Risk of losing control**
- **Risk of losing side or front stability of the telescopic handler**

The operator must remain in control of the telescopic handler at all times.

In the event of the telescopic handler overturning, do not try to leave the cabin during the incident. THE BEST PROTECTION IS TO STAY IN THE CAB, AND LEAN AWAY FROM THE FALL.

- Do not perform operations that exceed the capacities of the telescopic handler or attachments.
- Always drive the telescopic handler with the forks or attachment in the transport position, i.e., 1 foot (300 mm) from the ground, the boom retracted and the carriage tilted rearward.

NOTE: *If the hydraulic functions do not operate on CT6-18 Turbo machines, turn the steering wheel to recharge the hydraulic control accumulator and hydraulic functions should be restored.*

- Only carry loads that are balanced and properly anchored to avoid any risk of a load falling off.
- Ensure that pallets, cases, banding, etc. are in good condition and suitable for the load to be lifted.
- Familiarize yourself with the telescopic handler on the terrain where it will be used.
- Ensure that the service brakes are working properly.
- The loaded telescopic handler must not travel at speeds in excess of 7 mph (12 km/h).
- Drive smoothly at an appropriate speed for the operating conditions (terrain, load on the telescopic handler).
- Do not use the hydraulic boom controls when the telescopic handler is moving.
- Do not move the telescopic handler with the boom in the raised position unless under exceptional circumstances, and then with extreme caution, at very low speed and using gentle braking. Ensure that visibility is adequate.
- Drive around turns slowly.
- In all circumstances make sure you are in control of your speed.
- On damp, slippery or uneven terrain, drive slowly, and brake gently, never abruptly.
- Only use the telescopic handler's forward/reverse lever from a stationary position and never do so abruptly.
- Do not drive with your foot on the brake pedal or with the parking brake on.
- Always remember that hydrostatic steering is very sensitive to movement of the steering wheel, so turn it gently and smoothly.
- Never leave the engine running when the telescopic handler is unattended.
- Do not leave the cab when the telescopic handler has a raised load.
- Look where you are going and always make sure you have good visibility along the route.
- Use the rear-view mirrors frequently.
- Drive around, not over, obstacles.
- Never drive along the edge of a ditch or a steep slope.
- It is hazardous to use two telescopic handlers simultaneously to handle heavy or large loads, because this operation requires particular precautions to be taken. It must only be used when no other option is available and after risk analysis.

- Any or all of the following elements may affect the stability of the machine: terrain, engine speed, type of load being carried and placed, improper tire inflation, weight of the attachment tool, and abrupt movement of any control lever. **IF YOU ARE NOT CAREFUL WHILE OPERATING THIS MACHINE, ANY OF THE ABOVE FACTORS COULD CAUSE THE MACHINE TO TIP AND THROW YOU OUT OF THE OPERATOR'S STATION, WHICH MAY CAUSE SERIOUS BODILY INJURY OR DEATH!**
- ALWAYS wear the seat belt provided to prevent being thrown from the machine. If you are in an overturn:

  - DO NOT jump!

  - Hold on tight and stay with the machine!

  - Lean away from the fall!
- ALWAYS use the recommended hand holds and steps with at least three points of support when getting on and off the machine. Keep steps and platform clean. Face the machine when climbing up and down.
- Engage the gear required (see chapter: 5 - INSTRUMENTS AND CONTROLS: 16 - SHIFT LEVER AND TRANSMISSION CUT-OFF).
- Select the steering mode appropriate for its use and working conditions.
- Shift the forward/reverse lever to the selected direction of travel.
- Release the parking brake and accelerate gradually.

G - STOPPING THE TELESCOPIC HANDLER

- Never leave the ignition key in the telescopic handler during the operator's absence.
- When the telescopic handler is stationary, or if the operator has to leave the cab (even for a moment), place the forks or attachment on the ground, apply the parking brake and put the forward/reverse lever in neutral.
- Make sure that the telescopic handler is stopped where it will not interfere with the traffic flow and is at least 3 feet (1 meter) away from any railway tracks.
- Park the telescopic handler on flat ground or on an incline less than 15 %.
- Place the forward/reverse lever in neutral.
- Apply the parking brake.
- Entirely retract the boom.
- Lower the forks or attachment to rest on the ground.
- When using an attachment with a grab or jaws, or a bucket with hydraulic opening, close the attachment fully.
- Before stopping the telescopic handler after a long working period, let the engine idle for a few minutes, to allow the coolant and oil to lower the temperature of the engine and transmission. Do not neglect this precaution in the event of frequent stops or stalling of the engine, or else the temperature of certain parts will rise significantly due to the stopping of the cooling system, with the risk of badly damaging such parts.
- Stop the engine with the ignition switch.
- Remove the ignition key.
- Make sure all means of access to the telescopic handler are closed and locked (doors, windows, engine cover…).
- In the event of prolonged parking on a site, protect the telescopic handler from bad weather, particularly from freezing (check the level of antifreeze).

H - DRIVING THE TELESCOPIC HANDLER ON A PUBLIC HIGHWAY

- Operators driving on a public highway must comply with highway regulations.
- The telescopic handler must also comply with highway regulations. If necessary, contact your dealer.
- If equipped, make sure the rotating beacon is in place. Switch it on and verify its operation.
- Check for good working order and cleanliness of lights, indicators and windshield wipers.
- Switch off the working lights if the telescopic handler is so equipped.
- Select the steering mode for "HIGHWAY TRAFFIC" (see chapter: 5 - INSTRUMENTS AND CONTROLS: 19 - STEERING MODE SELECTION).
- Entirely retract the boom and position the attachment approximately 1 foot (300 mm) from the ground.

- On the road, start off in 3rd gear and shift into 4th when the conditions allow. In hilly areas, start off in 2nd gear and shift into 3rd when the conditions allow.

WARNING

Never coast in neutral (forward/reverse lever in neutral or transmission cut-off button pressed) to avoid the effects of engine braking. Failure to follow this warning on a slope will lead to excessive speed, which may make the telescopic handler uncontrollable (steering, brakes) and may cause an accident or severe mechanical damage.

I - DRIVING THE TELESCOPIC HANDLER WITH FRONT-MOUNTED ATTACHMENT

- You must comply with regulations in your state/province.
  - The attachment must not be loaded.
  - Make sure that the attachment does not block the forward lights.

J - OPERATING THE TELESCOPIC HANDLER WITH A TRAILER

- For using a trailer, observe the regulations in force in your state/province (maximum travel speed, braking, maximum weight of trailer, etc.).
- Do not forget to connect the trailer’s electrical equipment to that of the telescopic handler if equipped.
- The trailer's braking system must comply with regulations.
- When pulling a trailer with brakes, the telescopic handler must be equipped with a trailer brake control. In this case, remember to connect the trailer brake equipment to the telescopic handler.
- The maximum vertical load on the trailer hook must not exceed 3372 lbs. (15.0 kN).
- The authorized maximum trailer weight must not exceed the maximum weight authorized by the manufacturer (consult the manufacturer’s plate on the telescopic handler).
- When driving with a trailer, start off in 2nd gear and shift into 3rd when the conditions and condition of the road allow. Do not use 4th gear, to avoid overheating the engine and transmission. IF NECESSARY, CONSULT YOUR DEALER.

INSTRUCTIONS FOR HANDLING A LOAD

K - CHOICE OF ATTACHMENTS

- Only attachments approved by GEHL can be used on GEHL telescopic handlers.
- Make sure the attachment is appropriate for the work to be done (see chapter: 7 - ATTACHMENTS).
- Make sure the attachment is correctly installed and locked onto the carriage.
- Make sure that the attachments work properly.
- Comply with the load chart limits for the attachment used.
- Do not exceed the rated capacity of the attachment.
- Never lift a load in a sling without the proper attachment for the purpose.

L - MASS AND CENTER-OF-GRAVITY OF LOAD

- Before picking up a load, you must know its weight and its center-of-gravity.
- TThe load chart for your telescopic handler is valid for a load in which the longitudinal position of the load center is 24” (610 mm) forward of the base of the forks (fig. L1). For different load centers, contact your dealer.

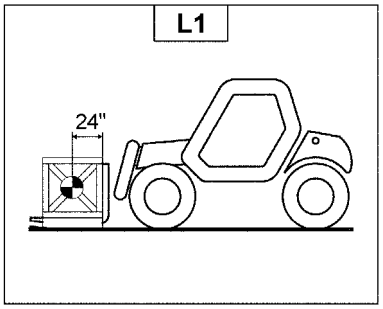

- For irregular loads, determine the side to side center-of-gravity before any movement (fig. L2) and set it on the longitudinal axis of the telescopic handler.

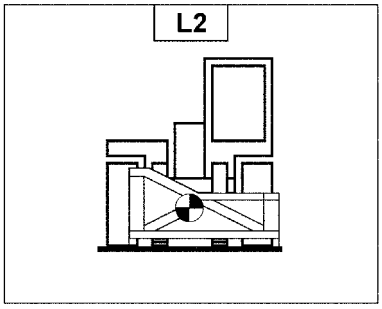

WARNING

DO NOT move a load heavier than the telescopic handler's rated capacity as listed on the load charts.

WARNING

For loads with a moving center-of-gravity (e.g., liquids), take into account the movement of the center-of-gravity to determine the load that can be safely handled. Be vigilant and take extra care to limit these movements as much as possible.

M - TRANSVERSE ATTITUDE OF THE TELESCOPIC HANDLER

The transverse (side-to-side) attitude is the angle of the chassis with respect to horizontal.

Raising the boom reduces the telescopic handler's lateral stability.

- Position the telescopic handler so that the bubble in the inclinometer is between the two lines (see chapter: 5 - INSTRUMENTS AND CONTROLS: 34 - INCLINOMETER).

N - PICKING UP A LOAD ON THE GROUND

- Approach the load with the telescopic handler perpendicular to the load, with the boom retracted and the forks in a horizontal position (fig. N1).
- Adjust the fork spread and centering to best connect with the load (fig. N2).
- Never lift a load on a single fork.
- Move the telescopic handler forward slowly (1) and bring the forks to stop in front of the load (fig. N3). If necessary, slightly lift the boom (2) while picking up the load.

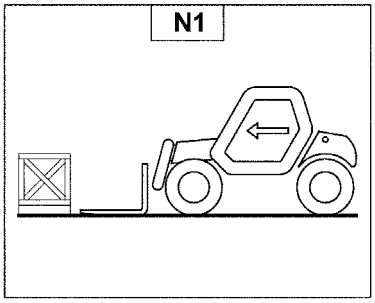

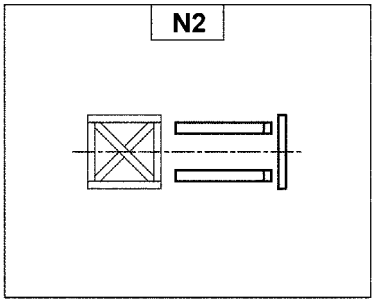

WARNING

Beware of the risks of trapping or pinching limbs when manually adjusting the forks.

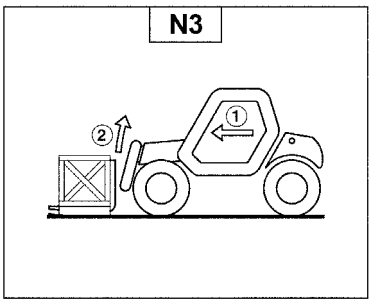

- Bring the load into the transport position.
- Tilt the load back far enough to ensure stability (loss of load while braking or going downhill).

FOR A NON-PALLETIZED LOAD:

- Tilt the carriage (1) forward and move the telescopic handler slowly forward (2), to insert the forks under the load (fig. N4) (block the load if necessary).
- Continue to move the telescopic handler forward (2) tilting the carriage (3) (fig. N4) rearward to position the load on the forks and check the load's longitudinal and lateral stability.

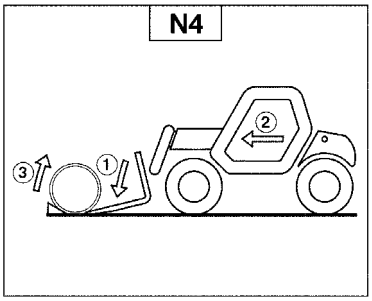

O - PICKING UP A HIGH LOAD

⚠ WARNING

DO NOT raise the boom until you have verified the side-to-side attitude of the telescopic handler.
Make sure that the following operations can be performed with good visibility.

- Ensure that the forks will easily pass under the load.
- Lift and extend the boom (1) (2) until the forks are level with the load, moving the telescopic handler (3) forward if necessary (fig. O1), moving very slowly and carefully.
- Always think about keeping the distance necessary to fit the forks under the load between the pile and the telescopic handler (fig. O1) and use the shortest possible extension of the boom.

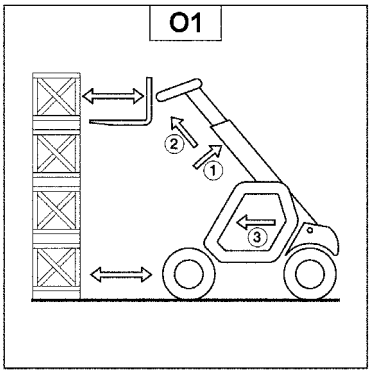

- Stop the forks in front of the load by alternately raising and extending the boom (1) or, if necessary, moving the telescopic handler forward (2) (fig. O2). Apply the parking brake and shift the transmission into neutral.

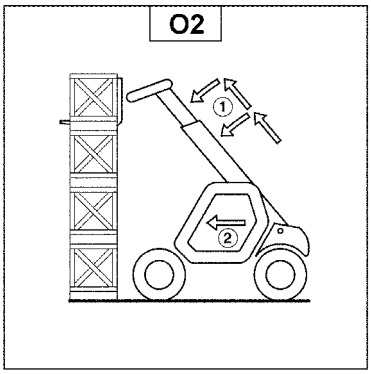

- Slightly lift the load (1) and tilt the carriage (2) rearward to stabilize the load (fig. O3).

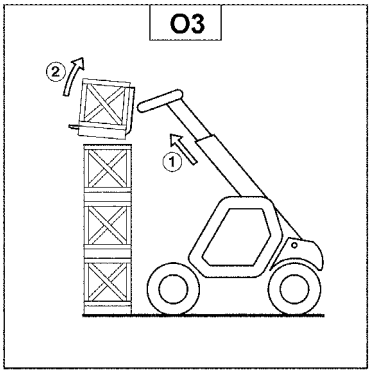

- Tilt the load sufficiently rearward to ensure its stability.
- If possible lower the load without moving the telescopic handler. Lift the boom (1) to release the load, retract (2) and lower the boom (3) to bring the load into the transport position (fig. O4).

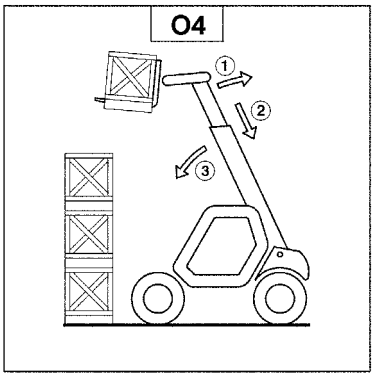

- If this is not possible, back up the telescopic handler (1), maneuvering very gently and carefully to release the load. Retract (2) and lower the boom (3) to bring the load into the transport position (fig. O5).

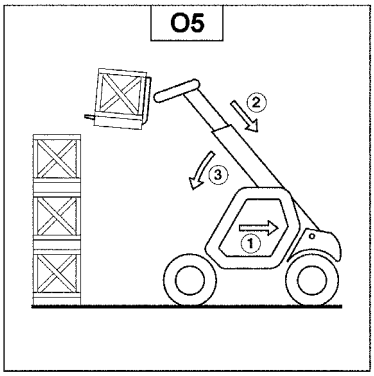

P - SETTING DOWN A HIGH LOAD

➲ Approach with the load in the transport position in front of the stack (fig. P6).

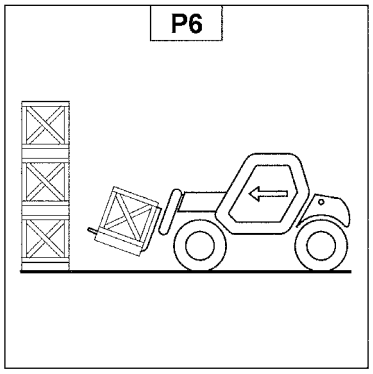

➲ Apply the parking brake and set the forward/reverse lever in neutral.

➲ Lift and extend the boom (1) (2) until the load is above the stack. If necessary, move the telescopic handler (3) forward (fig. P7), driving very slowly and carefully.

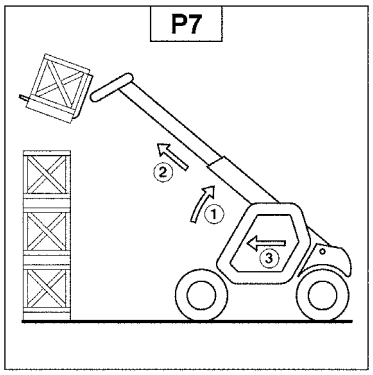

➲ Place the load in a horizontal position and set it down on the stack by lowering and retracting the boom (1) (2) to position the load correctly (fig. P8).

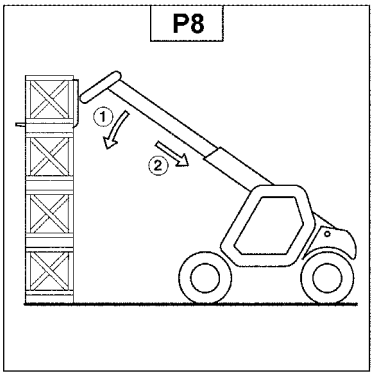

➲ If possible, release the fork by alternately retracting and raising the boom (1) (fig. P9). Then return the forks to transport position.

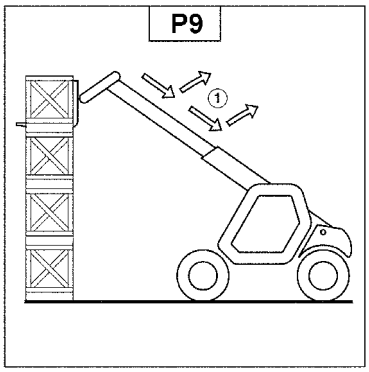

➲ If this is not possible, reverse the telescopic handler (1) very slowly and carefully to release the forks (fig. P10). Then return the forks to transport position.

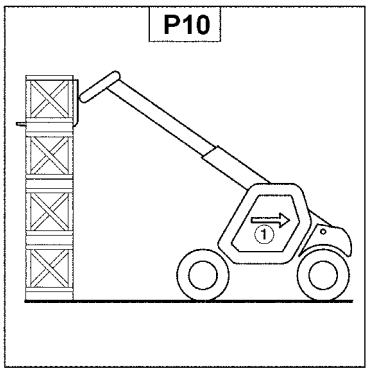

Q - SUSPENDED LOADS

The handling of suspended loads by means of the truss boom or other similar device can introduce dynamic forces affecting the stability of the machine that are not considered in the stability criteria of industry test standards. Grades, sudden starts, stops and turns can cause the load to swing and create a hazard.

DO NOT exceed the Telescopic Handler capacity for handling suspended loads. Only lift the load vertically; NEVER drag it horizontally. Use tag lines to restrain load swing whenever possible.

GUIDELINES FOR "FREE RIGGING/SUSPENDED LOADS"

1. The rigging equipment must be in good condition and comply with the applicable U.S. OSHA regulation, 1910.184, "Slings," or 1926.251, "Rigging equipment for material handling."
2. The rigging equipment must be secured to the forks such that it cannot slip or slide either sideways or fore and aft.
3. The capacity of the fork(s) and the machine (whichever is less) must not be exceeded.
4. The load center must remain at 24" (610 mm) or less.
5. No lifting of material may be done when anyone is on the load, rigging or forks.
6. Multiple pickup points on the load are preferred to prevent the load from rotating, but a single pickup point may be used if one or more tag lines are utilized. And, of course, the load must never be positioned over personnel at any time.

Chapter 5

INSTRUMENTS AND CONTROLS

CT6-18 TURBO

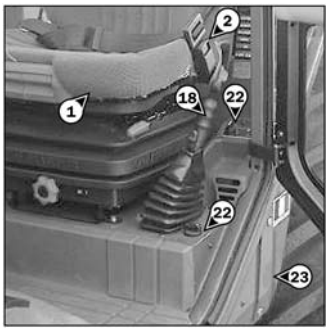

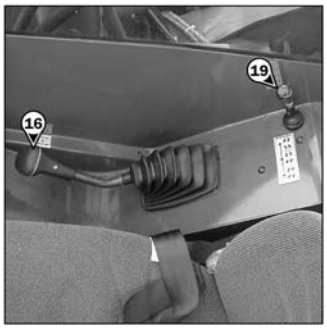

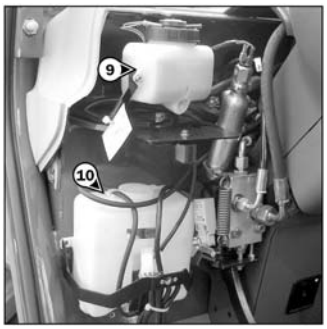

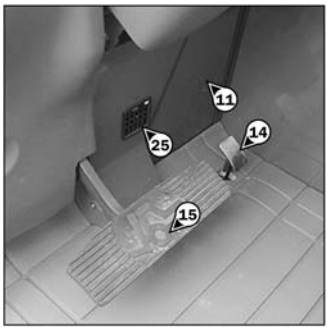

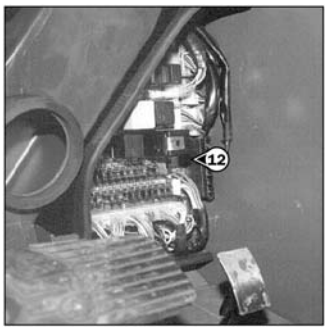

DESCRIPTION

1 - OPERATOR'S SEAT
2 - SEAT BELT
3 - CONTROL AND SIGNAL LAMP PANEL
4 - BOOM-MOUNTED WORK LIGHTS (See page 37)
5 - SWITCH PANEL
6 - LIGHT SWITCH, HORN AND INDICATOR SWITCH
7 - IGNITION SWITCH
8 - BRAKE FLUID RESERVOIR AND WINDSHIELD WASHER TANK ACCESS PANEL
9 - BRAKE FLUID RESERVOIR
10 - WINDSHIELD WASHER TANK
11 - FUSES AND RELAYS ACCESS PANEL
12 - FUSES AND RELAYS
13 - CAB INTERIOR LIGHT
14 - ACCELERATOR PEDAL
15 - SERVICE BRAKE PEDAL AND TRANSMISSION CUT-OFF
16 - SHIFT LEVER AND TRANSMISSION CUT-OFF
17 - FORWARD/REVERSE LEVER
18 - PARKING BRAKE LEVER
19 - STEERING SELECTION
20 - HYDRAULIC CONTROLS AND TRANSMISSION CUT-OFF
21 - LOAD CHARTS
22 - HEATER CONTROLS
- HEATER / AIR CONDITIONING CONTROLS
23 - CAB AIR FILTERS
24 - WINDSHIELD DEFROSTER
25 - HEATING VENTS
26 - DOOR LOCK
27 - LOCKING HANDLE FOR UPPER HALF DOOR
28 - RELEASING BUTTON FOR UPPER HALF DOOR
29 - HANDLE FOR REAR WINDOW OPENING
30 - MANUAL HOLDER
31 - FRONT LIGHTS (See page 45)
32 - REAR LIGHTS (See page 45)
33 - ENGINE BLOCK HEATER (See page 45)
34 - INCLINOMETER
35 - STEERING WHEEL REGULATING HANDLE
36 - ARM REST
37 - RADIO (See page 46)
TOW PIN (See page 46)
A - TOWING PIN
B - TRAILER ELECTRIC CONNECTOR

NOTE: *All terms such as: RIGHT, LEFT, FRONT, REAR are meant for an observer seated in the operator's seat and looking forward.*

1 - OPERATOR'S SEAT - CT6-18

Designed for maximum comfort, this seat can be adjusted as follows:

LONGITUDINAL ADJUSTMENT

- Pull locking lever (1) towards the right.
- Slide the seat to the required position.
- Release the lever and be sure it returns to the lock position.

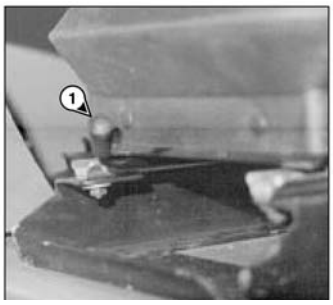

SEAT SUSPENSION ADJUSTMENT

- Refer to the seat's graduation.
- Turn handle (2) depending on the operator's weight.

ADJUSTMENT OF THE ANGLE OF THE BACK-REST

- Pull locking lever (3) upwards.
- Slide the back-rest to the required position.
- Release the lever and be sure it returns to the lock position.

1 - OPERATOR'S SEAT - CT6-18 TURBO

Designed for maximum comfort, this seat can be adjusted as follows.

WEIGHT ADJUSTMENT (FIG. A)

It is recommended that the weight be adjusted when the operator is not sitting in the seat.

- Refer to graduation (1) of the seat.
- Turn handle (2) according to the operator's weight.

NOTE: *It is recommended that the weight should be checked and adjusted before starting the telescopic handler.*

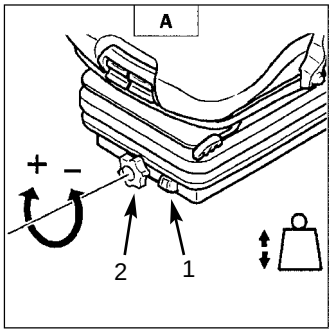

SEAT HEIGHT ADJUSTMENT (FIG. B)

Raise the seat to the desired position, until you hear the ratchet click. If you raise the seat above the last notch (stop), the seat drops down to the lowest position.

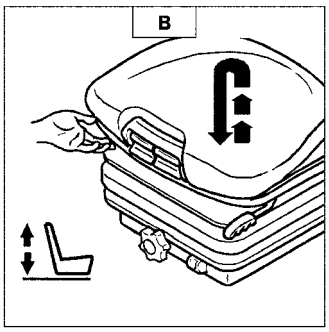

SEAT BACK-REST ANGLE ADJUSTMENT (FIG. C)

The back rest angle of the seat may be adjusted to suit the individual.

- Press the left-hand button while pushing on the seat or relaxing pressure on the seat to find a comfortable position.

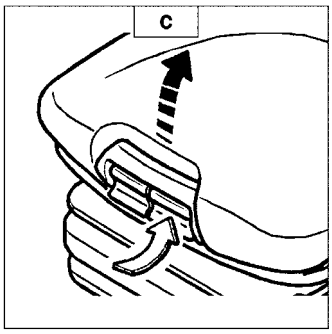

SEAT DEPTH ADJUSTMENT (FIG. D)

The depth of the seat may be adjusted to suit the individual.

- Press the right-hand button while raising or lowering the seat to find the desired position.

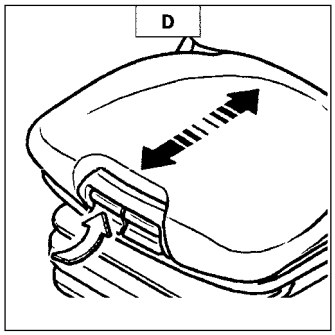

EXTENDING THE HEAD REST (FIG. E)

- The height of the back rest can be adjusted by pulling it upwards (the notches will click) up to the stop.
- The head rest can be removed by applying sufficient pressure to pull it off the stop.

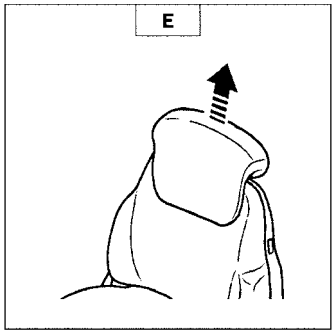

LUMBAR ADJUSTMENT (FIG. F)

This increases the comfort of the seat and the operator's freedom of movement.

- Turn the handle either left or right to adjust the height or depth of the lumbar support.

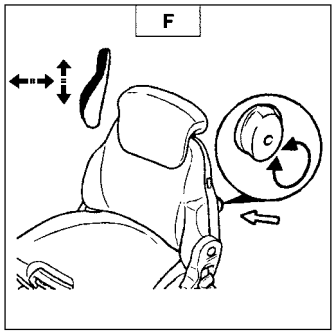

ADJUSTMENT OF THE ANGLE OF THE BACK-REST (FIG. G)

- Support the back rest, pull the lever and position the back-rest to find the desired position.

LONGITUDINAL ADJUSTMENT (FIG. H)

- Adjust the locking lever until you reach the position required. This then locks and the seat will not shift into another position.

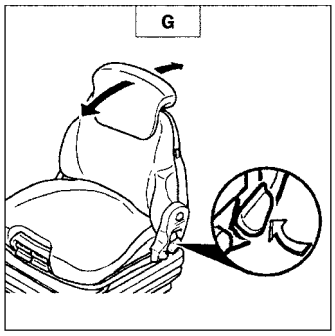

⚠ WARNING

Support the back rest when making adjustments to prevent it from swinging completely forward.

MAINTENANCE (FIG. I)

Dirt may adversely affect the correct functioning of the seat. For this reason, make sure your seat is always clean.

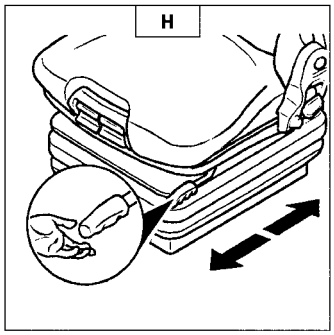

- To clean or change the cushions, simply remove them from the seat frame.

Avoid wetting the cushion fabric when cleaning. Check the resistance of the fabric on a small hidden area before using any fabric or plastic cleaner.

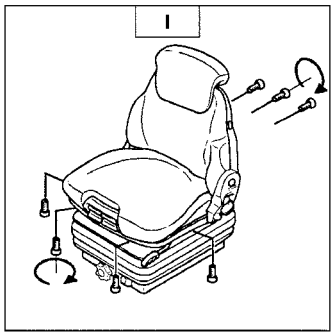

2 - SAFETY BELT

- Sit correctly on the seat.
- Check that seat belt is not twisted.
- Place the seat belt at hip level.
- Attach the seat belt and check that it latches.
- Adjust the seat belt to your body shape, without squeezing your hips and without excess slack.

WARNING

Do not use the telescopic handler if the seat belt is damaged (not latching, cuts, tears, etc.). Repair or replace the seat belt immediately.

3 - CONTROL AND SIGNAL LAMP PANEL

CONTROL INSTRUMENTS

A - HOURMETER AND TACHOMETER

CT6-18 Turbo

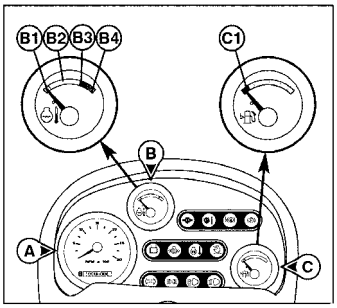

CT6-18 Turbo

A - HOURMETER

CT6-18

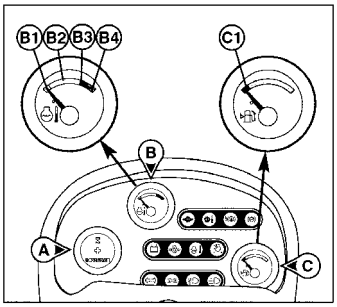

CT6-18

B - ENGINE COOLANT TEMPERATURE

Temperature zone

B1 - Blue zone 32° F - 122° F (0° C - 50° C)

B2 - Green zone 122° F - 212° F (50° C - 100° C)

B3 - Black/red zone 212° F - 221° F (100° C - 105° C)

B4 - Red zone 221° F - 248° F (105° C - 120° C)

NOTE: *Red indicator light "E" comes on between zone B3 and B4.*

C - FUEL LEVEL

Red zone C1 indicates that you are using the reserve supply and that time of use is limited.

SIGNAL LIGHTS

When activating the electrical system of the telescopic handler, all the red lamps must light and the panel's buzzer must sound to indicate their good working order. If one of the red lamps or the buzzer does not function, carry out the necessary repairs.

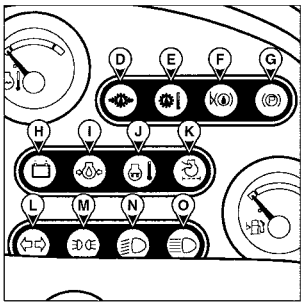

D - RED TRANSMISSION OIL PRESSURE LAMP

The lamp and the buzzer come on when the pressure in the transmission, when driving forward, is abnormally low. Stop the telescopic handler and look for the cause (insufficient transmission oil level, internal leak in the transmission, etc.).

NOTE: *The signal lamp operates in forward travel conditions only. The signal should not be taken into account when the engine is running at idle or is stopped.*

E - RED TRANSMISSION OIL TEMPERATURE LAMP

The lamp and the buzzer come on when the converter oil temperature is abnormally high. Stop the lift truck and look for the cause of this overheating.

F - RED BRAKE FLUID LEVEL LAMP

If the lamp and the buzzer come on, when the lift truck is running, stop the engine immediately and check the brake fluid level.

In the event of an abnormal dropping of the level, consult your dealer.

G - RED PARKING BRAKE LAMP

This lamp comes on when the parking brake is applied.

H - RED ALTERNATOR CHARGE LAMP

If the lamps E - F - H - I - J - K and the buzzer come on, when the lift truck is running, stop the engine immediately and check the electrical circuit as well as the alternator belt.

I - RED ENGINE OIL PRESSURE LAMP

If the lamp and the buzzer come on when the telescopic handler is running, stop the engine immediately and look for the cause (check oil level in engine crankcase).

J - RED ENGINE COOLANT TEMPERATURE LAMP

If the lamp and the buzzer come on when the telescopic handler is running, stop the engine immediately and investigate the cooling system for the cause of the malfunction.

K - RED LAMP - AIR FILTER OR HYDRAULIC RETURN FILTER CLOGGED

The lamp and buzzer come on when the air filter cartridge or the hydraulic return oil filter cartridge is clogged. Stop the telescopic handler and carry out the necessary repairs (see cleaning and replacement requirements in chapter: 6 - MAINTENANCE: FILTER CARTRIDGES AND BELTS).

L - GREEN TURN INDICATOR LAMP

M - GREEN SIDELIGHTS LAMP

N - GREEN LOW BEAM LAMP

O - BLUE MAIN BEAM LAMP

4 - BOOM-MOUNTED WORK LIGHTS (OPTION)

5 - SWITCH PANEL

The location of the switches may vary depending on the options.

A - WARNING LIGHTS

This switch enables the left and right indicators to be switched on simultaneously, with the ignition off. The switch lamp indicates that the switch is being used.

B - BOOM-MOUNTED WORK LIGHTS (OPTION)

This switch lights the work lights mounted at the end of the boom. Pressing the bottom of the switch turns “ON” the boom work lights.

C - REAR FOG LIGHT

D - FRONT WINDSHIELD WIPER AND WINDSHIELD WASHER

Pressing the bottom of this switch to the first position operates the windshield wiper. Further pressing and holding the bottom of the switch simultaneously operates the windshield wiper and windshield washer.

E - REAR WINDSHIELD WIPER AND ROOF WINDSHIELD WIPER

Pressing the top of the switch operates the roof window wiper when equipped. Pressing and holding the bottom of the switch operates the rear windshield wiper.

NOTE: *The rear windshield wiper is operated with this switch only ; to do so, the switch (E1) located on the rear windshield wiper motor must be switched to the “ON” position (I).*

F - TRANSMISSION CUT-OFF

The switch selects transmission cut-off to the service brake pedal or the hydraulic controls lever.

Position A: Indicator light on, transmission cut-off to service brake pedal enabled.

Position B: Indicator light off, transmission cut-off to hydraulic control lever enabled.

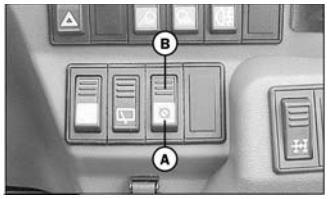

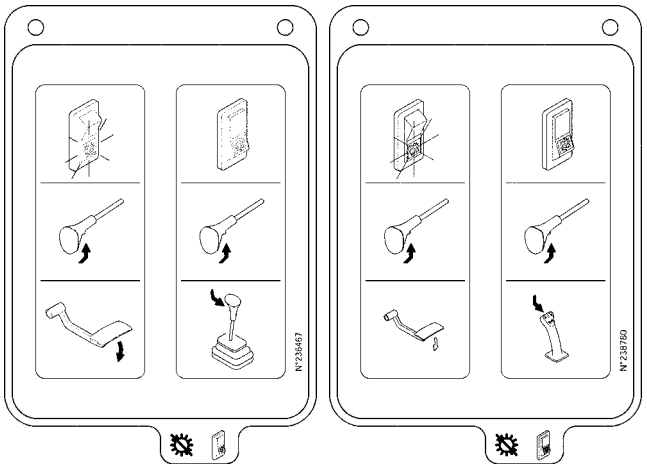

CT6-18 CT6-18 TURBO

NOTE: *In all cases transmission cut-off can be effected by using the shift lever.*

USE OF TRANSMISSION CUT-OFF

Transmission cut-off to brake pedal (position A):

- When loading.

Transmision cut-off to hydraulic controls lever (position B):

- When driving
- For inching and continuous stopping and starting (delicate handling) (In order to optimise hydraulic movements, cut off transmission to the hydraulic controls lever).
- Starting up on a slope

G - FRONT WORKING LIGHT
(OPTION for CT6-18)

Pressing the bottom of this switch turns “ON” the front work lights located on the top front of the cab.

H - REAR WORKING LIGHT
(OPTION for CT6-18)

Pressing the bottom of this switch turns “ON” the rear work light located on the top rear of the cab.

I - OPTION

J - OPTION

6 - LIGHT SWITCH, HORN AND INDICATOR SWITCH

The switch controls the visual and audible alarms.

A - All lights are off; the direction indicators do not flash.

B - The right turn indicators flash.

C - The left turn indicators flash.

D - The sidelights and the rear lights are on.

E - The low-beam headlights and the rear lights are on.

F - The high-beam headlights and the rear lights are on.

G - Flashes high-beam headlights when held in this position.

Pressing the switch sounds the horn.

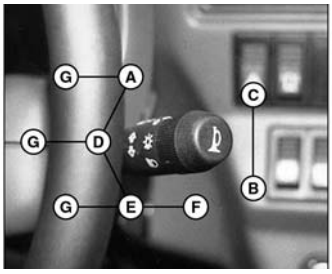

NOTE: *The positions D - E - F - G can be used without the ignition being on.*

7 - IGNITION SWITCH

The key switch has five positions:

P - Ignition off, parking position

O - Ignition switched off and engine stopped

I - Ignition on

II - Pre-heating

III -Start

When the engine starts, return to position I as soon as the key is released

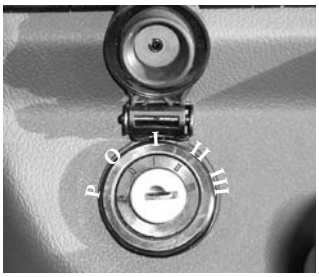

8 - BRAKE FLUID RESERVOIR AND WINDSHIELD WASHER ACCESS PANEL

- Loosen screw (1) and lift up the brake fluid and windscreen washer access panel.

9 - BRAKE FLUID RESERVOIR

See chapter: 6 - MAINTENANCE: B - EVERY 50 HOURS SERVICE.

10 - WINDSHIELD WASHER RESERVOIR

See chapter: 6 - MAINTENANCE: B - EVERY 50 HOURS SERVICE.

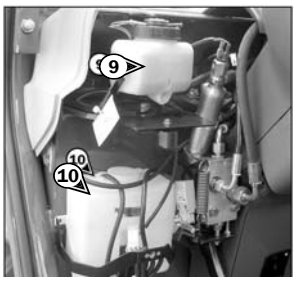

11 - FUSE AND RELAY ACCESS PANEL

- Lift up the fuse and relay access panel 11.

12 - FUSES AND RELAYS

A sticker on the inside of the access panel gives a clear display of the use of the components described below.

K0 - OPTION
K1 - Relay cutting transmission to hydraulic controls (CT6-18 TURBO)
- OPTION (CT6-18)
K2 - Transmission cut-off relay
K3 - Reverse gear relay
K4 - Forward gear relay
K5 - Buzzer
K6 - OPTION
K7 - OPTION
K8 - Safety system starting switch relay
K9 - Flashing unit
K16 - Preheating engine relay
K17 - Control panel lighting relay

NOTE: *Replace a used fuse with a new fuse of the same quality and capacity. Never reuse a repaired fuse.*

F1 - (10A MAX.) - Electric controls of hydraulic movements (7.5A) (CT6-18 TURBO)
- OPTION (CT6-18)

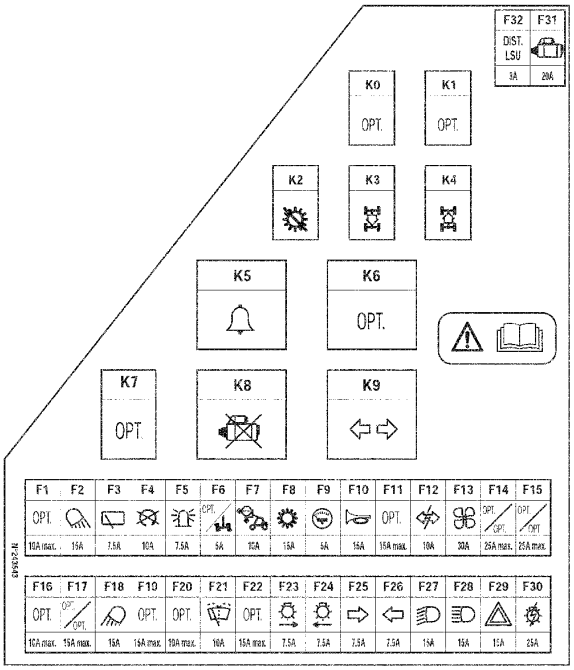

F2 - (15A MAX.) - Working tail light (10A) (CT6-18 Turbo)
- Working tail light (OPTION) (10A) (CT6-18)
F3 - (10A MAX.) - Rear windshield wiper (7.5A)
- Roof windshield wiper (7.5A) (CT6-18 TURBO)
- Roof windshield wiper (OPTION) (7.5A) (CT6-18)
F4 - (10A MAX.) - Stop engine electrovalve (7.5A)
F5 - (10A MAX.) - OPTION
F6 - (7.5A MAX.) - Alignment of the wheels (5A)
F7 - (15A MAX.) - OPTION
F8 - (15A MAX.) - Gear reverser (15A)
- Transmission cut-off (15A)
- Reverse lights (15A)
- Reverse buzzer alarm (15A)
F9 - (10A MAX.) - Control instruments panel (5A)
F10 - (15A MAX.) - Sound alarm (15A)
- Stop switch (15A)
F11 - (15A MAX.) - OPTION
F12 - (10A MAX.) - Indicator power supply (10A)
F13 - (35A MAX.) - Heating (30A)
F14 - (25A MAX.) - OPTION
F15 - (25A MAX.) - OPTION
F16 - (10A MAX.) - OPTION
F17 - (15A MAX.) - OPTION
F18 - (15A MAX.) - Front working head light (15A) (CT6-18 TURBO)
- Front working head light (15A) (OPTION CT6-18).

F19 - (15A MAX.) - OPTION

F20 - (10A MAX.) - OPTION

F21 - (10A MAX.) - Front windscreen wiper and windscreen washer (10A)

F22 - (15A MAX.) - OPTION

F23 - (10A MAX.) - Right sidelight (7.5A)
- Sidelight indicator light (7.5A)
- Control panel lighting (7.5A)

F24 - (10A MAX.) - Left sidelights (7.5A)

F25 - (10A MAX.) - Right indicators (7.5A)

F26 - (10A MAX.) - Left indicators (7.5A)

F27 - (15A MAX.) - Low beam (15A)
- Low beam indicator light (15A)
- Rear fog light (15A)

F28 - (15A MAX.) - Main beam (15A)
- Main beam lamp (15A)

F29 - (25A MAX.) - Hazard warning lights power supply (15A)
- Roof light (15A)

F30 - (25A MAX.) - Light switch power supply, horn and indicators (25A)

F31 - (20A MAX.) - Starter (20A)

Remove cap 1 for access to fuses F40 to F43

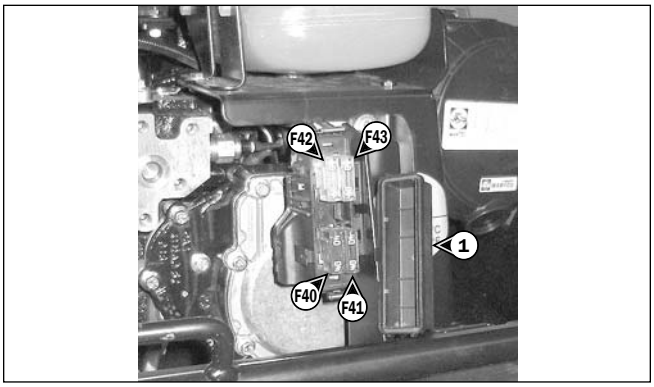

F40 - (40A MAX.) - Telescopic Handler electrical equipment (40A)

F41 - (40A MAX.) - Telescopic Handler electrical equipment (40A)

F42 - (80A MAX.) - Preheating engine (80A)

F43 - (80A MAX.) - Alternator (80A)

13 - ROOF LIGHT

14 - ACCELERATOR PEDAL

15 - SERVICE BRAKE PEDAL AND TRANSMISSION CUT-OFF

Depressing the brake pedal hydraulically activates the internal braking mechanism in the front and rear axles. Depending on the position of the transmission cut-off switch, power to the transmission is cut off. This allows greater engine acceleration and power to the hydraulic system without power to the drive axles while the service brake pedal is depressed.. (see: chapter 5 - INSTRUMENTS AND CONTROLS: 5 - SWITCH PANEL).

16 - SHIFT LEVER AND TRANSMISSION CUT-OFF

To shift gears, it is necessary to cut off the transmission by pressing the button (1) on the shift lever.

1st gear: To the right, upwards

2nd gear: To the right, downwards

3rd gear: To the left, upwards

4th gear: To the left, downwards

SHIFTING THE TRANSMISSION

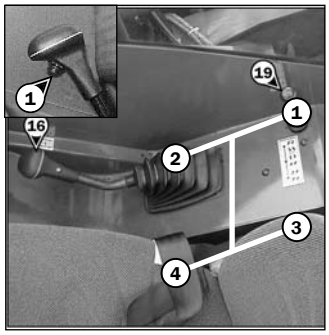

Because this telescopic handler has a torque converter, it is not necessary to always start up in 1st gear and progress up through the gears.

IMPORTANT: *The choice of transmission gear should be made carefully according to the nature of the work being carried out. A poor choice may result in an extremely rapid elevation of the transmission oil temperature through excessive slipping of the converter, which could lead to serious damage to the transmission. (It is essential to stop and change the working conditions if the transmission oil temperature indicator light comes on.) This poor choice may also result in a reduction in the telescopic handler's performance in forward speed. When the forward force increases, the forward speed in the chosen gear (for example, 3rd gear) may be lower than the forward speed that could be obtained with a lower gear (in 2nd instead of the 3rd).*

In general, use the following gears according to the nature of the work being carried out:

- On the road: Start off in 3rd gear and shift up to 4th if the conditions permit. In hilly areas: Start off in 2nd gear and shift up to 3rd if the conditions permit.
- With a trailer on the road: Start in 2nd gear and shift up to 3rd if the conditions permit.
- Material handling: Start in 3rd gear, or 2nd gear in restricted spaces.
- Earthmoving: Start in 1st gear.
- Loading (with bucket, manure fork, etc.): Start in 2nd gear.

17 - FORWARD/REVERSE LEVER

This lever is used to change the direction of travel (forward or reverse).

NOTE: *To prevent damage to the transmission, the telescopic handler should be traveling at a slow speed and not accelerating when changing the direction of travel.*

When the forward/reverse lever is in the neutral position, a mechanical lock prevents an inadvertent shifting movement.

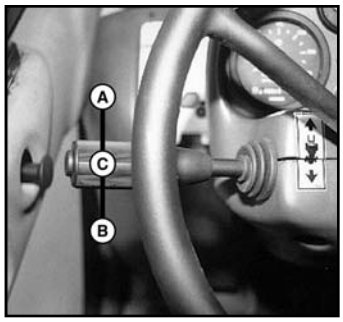

FORWARD: Lift slightly and push the lever forward (position A).

REVERSE: Lift slightly and pull the lever rearward (position B).

NEUTRAL: To start the engine, the lever must be in neutral (position C).

NOTE: *The reverse lights and the backup alarm indicate when the telescopic handler is operating in reverse.*

PROCEDURE TO MOVE THE TELESCOPIC HANDLER

The telescopic handler is equipped with an electronic unit that prevents the machine from moving unless the operator is seated in the seat.

To move the telescopic handler, the following sequence must be followed:

1 - sit in the operator's seat,

2 - release the parking brake, and

3 - shift into forward or reverse.

To stop the telescopic handler, the following sequence must be followed:

1 - shift into neutral,

2 - apply the parking brake, and

3 - step out of the telescopic handler.

If this sequence is not followed (for example, leaving the operator's seat without applying the parking brake), an alarm will sound. The operator must then shift into neutral and follow the sequence.

18 - PARKING BRAKE LEVER

To prevent inadvertent release, the lever is fitted with a safety lock.

- To apply the parking brake, pull the lever rearward (position A).
- To release the parking brake, release the safety lock and push the lever forward (position B).

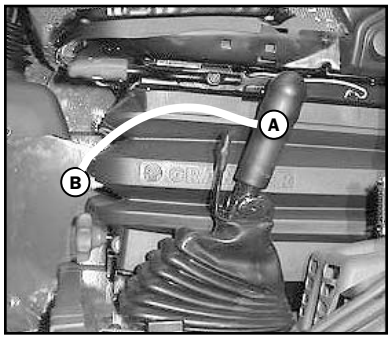

19 - STEERING MODE SELECTION

Before selecting one of the three possible steering positions, bring the four wheels into alignment, i.e., in the straight-ahead position.

A - STEERING SELECTOR LEVER

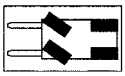

A1 - Front wheels steer (highway use)

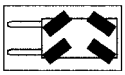

A2 - Front and rear wheels steer in opposite direction (4-wheel steer)

A3 - Front and rear wheels steer in the same direction (crab steer)

B - GREEN LAMPS FOR ALIGNMENT OF THE WHEELS

These lamps come on to indicate the alignment of the wheels in relation to the axles of the telescopic handler. The lamp B1 is for the front wheels, and the lamp B2 is for the rear wheels.

C - SWITCH FOR ALIGNMENT OF THE WHEELS

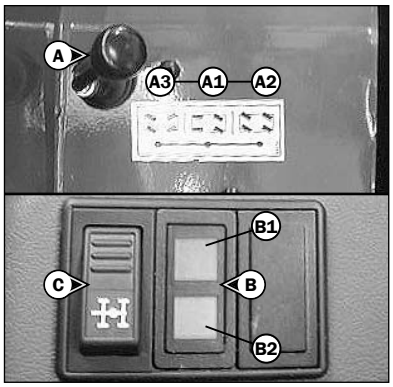

This switch enables alignment of the wheels. The indicator lamp indicates if it is ON.

WHEEL ALIGNMENT PROCEDURE

- Press the switch (signal lamp ON).
- Shift the hydraulic valve control lever for steering selection A to position A2 (4-wheel steering).
- Turn the steering wheel and bring the rear wheels into alignment until the lamp B2 is ON.
- Shift the hydraulic valve control lever for steering selection A to position A1 (highway use).
- Turn the steering wheel and bring the front wheels into alignment until the lamp B1 is ON.

WARNING

Before driving on roads, it is necessary to check the alignment of the rear wheels and to select front-wheel steering mode. The alignment of the rear wheels must be done regularly while driving the telescopic handler, with the help of the green lamps. In case of problems, consult your dealer.

20 - HYDRAULIC CONTROLS AND TRANSMISSION CUT-OFF

IMPORTANT*: Do not attempt to alter the hydraulic system pressure by adjusting the pressure regulating valve. In the event of suspected malfunction, contact your dealer. ANY ALTERATION MAY VOID THE WARRANTY.*

WARNING

Use the hydraulic controls carefully without jerking, to avoid accidents caused by sudden movement of the telescopic handler.

CT6-18 with Loader-Type Controls

LIFTING A LOAD

- Pull lever A rearward to raise the boom.
- Push lever A forward to lower the boom.

TILTING THE CARRIAGE

- Move lever A to the left for rearward tilt.
- Move lever A to the right for forward tilt.

TELESCOPING THE BOOM

- Push lever B forward to extend the boom.
- Pull lever B rearward to retract the boom.

ATTACHMENT OPERATION

- Move lever C forward or rearward to actuate a hydraulic attachment.

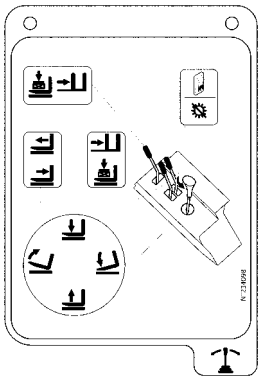

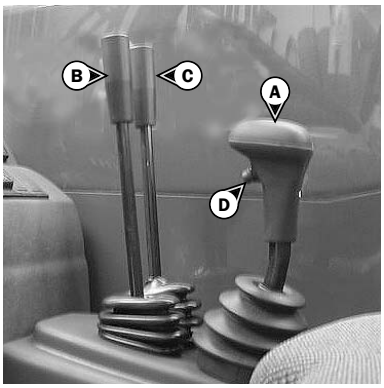

TRANSMISSION CUT-OFF

- Press button D (see: chapter 5 - INSTRUMENTS AND CONTROLS: 5 - SWITCH PANEL).

CT6-18 with “Pick-N-Place” Controls

LIFTING A LOAD

- Pull lever A rearward to raise the boom.
- Push lever A forward to lower the boom.

TELESCOPING THE BOOM

- Move lever A to the left to retract the boom.
- Move lever A to the right to extend the boom.

TILTING THE CARRIAGE

- Push lever B forward to tilt the carriage forward.
- Pull lever B backward to tilt the carriage rearward.

ATTACHMENT OPERATION

- Move lever C forward or rearward to actuate a hydraulic attachment.

TRANSMISSION CUT-OFF

- Press button D (see: chapter 5 - INSTRUMENTS AND CONTROLS: 5 - SWITCH PANEL).

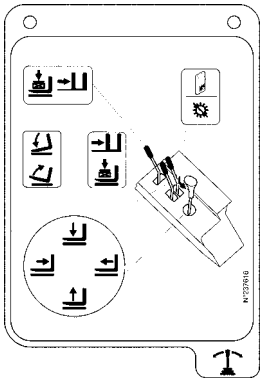

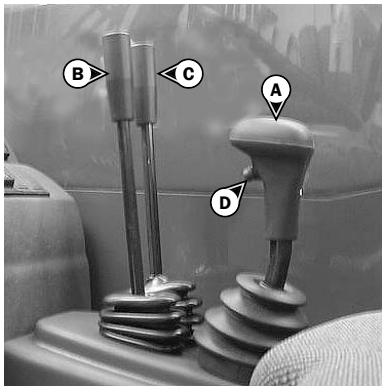

CT6-18 Turbo

LIFTING A LOAD

- Pull lever A rearward to raise the boom.
- Push lever A forward to lower the boom.

TILTING THE CARRIAGE

- Move lever A to the left for rearward tilt.
- Move lever A to the right for forward tilt.

TELESCOPING THE BOOM

- Press button B to extend the boom.
- Press button C to retract the boom.

ATTACHMENT OPERATION

- Press buttons D or E to actuate a hydraulic attachment..

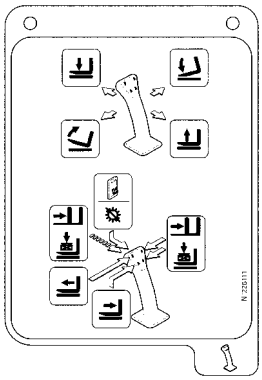

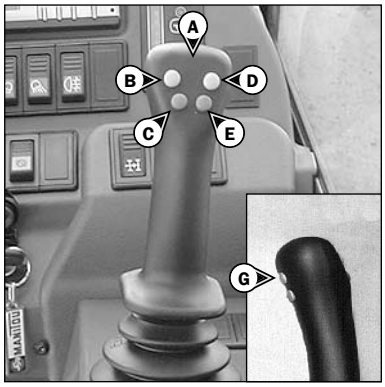

TRANSMISSION CUT-OFF

- Press button G (see: chapter 5 - INSTRUMENTS AND CONTROLS: 5 - SWITCH PANEL).

NOTE: *If the hydraulic functions do not operate on CT6-18 Turbo machines, turn the steering wheel to recharge the hydraulic control accumulator and hydraulic functions should be restored.*

21 - LOAD CHARTS

This flip chart includes the description of the hydraulic controls and the load charts for the attachments used on the telescopic handler.

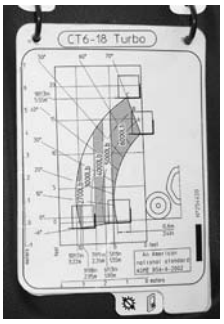

22 - HEATER CONTROLS

A - FAN CONTROL

This 3-speed control regulates the airflow through the vents.

B - TEMPERATURE CONTROL

This control is used to adjust the temperature in the cab.

B1 - With the valve closed, the fan delivers unheated air.

B2 - With the valve opened completely, the fan delivers fully heated air.

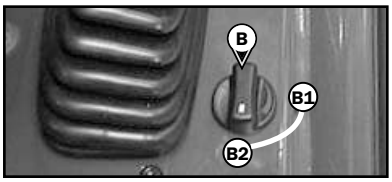

The intermediate positions allow the temperature to be adjusted.

22 - HEATER / AIR CONDITIONER CONTROLS

IMPORTANT: *The air conditioner only comes on when the telescopic handler has been started. When using the air conditioning, the doors and windows should be kept closed.*

In cold weather: Warm the engine before switching on the compressor, to allow any refrigerant that has collected in the liquid state at the lowest point of the compressor circuit to turn into gas under the effect of the heat given off by the engine, because the compressor is likely to be damaged by liquid refrigerant.

In winter: To ensure proper operation and complete efficiency of the air conditioning unit, switch on the compressor once a week, if only briefly, to lubricate the internal seals.

IMPORTANT: *If the air conditioner does not seem to be working properly, have it examined by your dealer (see chapter: 6 - MAINTENANCE: H - EVERY TWO YEARS). Never try to repair any problems yourself.*

DESCRIPTION OF THE AIR CONDITIONER CONTROLS

A - Control with signal light indicating start-up and cut-out of the air conditioning system, if control "C" is in position 1, 2 or 3

B - Heating air temperature control

C - Air flow setting and fan speed control.

In position "0" the air conditioning system no longer functions.

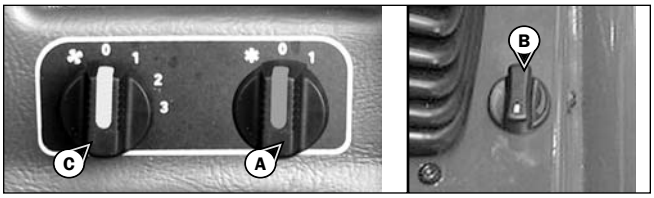

NOTE: *Possible losses of water under the telescopic handler are due to condensate discharges caused by the drying effect of the air conditioning, especially with high outside temperatures and high relative humidity.*

For the air conditioner to perform properly, the air intakes must not be blocked by frost, snow or leaves.

When the air conditioner is running, at least one of the cab air vents must be open to avoid the risk of freezing the evaporator.

HEATING MODE

The controls must be adjusted in the following way:

A - Control, with signal light off

B - At the selected temperature

C - At the selected fan speed 1, 2 or 3

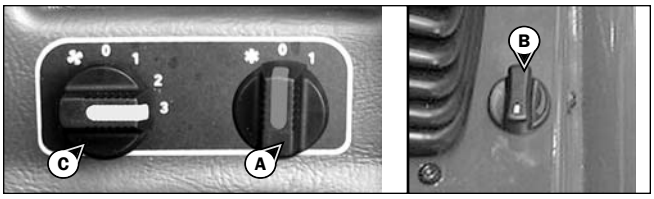

AIR CONDITIONING MODE

The controls must be adjusted in the following way:

A -Control, with signal light on

B - At the selected temperature

C - At the selected fan speed 1, 2 or 3

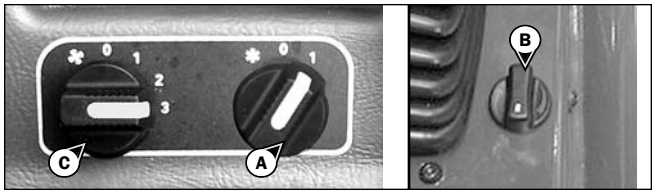

DEFROSTING MODE

The controls must be adjusted in the following way:

A - Control, with signal light on

B - At the selected temperature

C - At the selected fan speed 1, 2 or 3

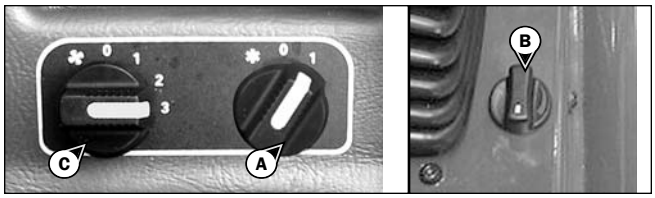

23 - CAB AIR FILTERS

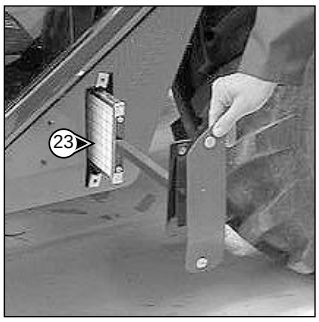

See chapter: 6 - MAINTENANCE: D - EVERY 500 HOURS SERVICE.

24 - WINDSHIELD DEFROSTER

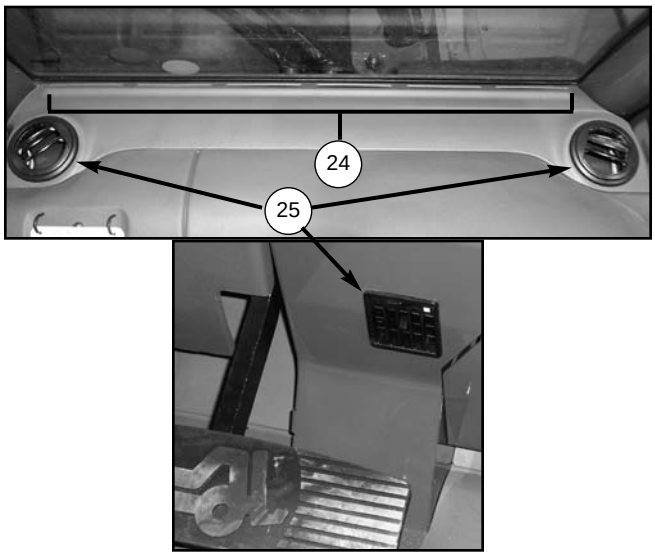

For optimum effectiveness, close the heater vents.

25 - HEATER VENTS

These heater vents enable the air to be directed to the interior of the cab and onto the side windows.

26 - DOOR LOCK

Two keys are provided with the telescopic handler to enable the cabin to be locked.

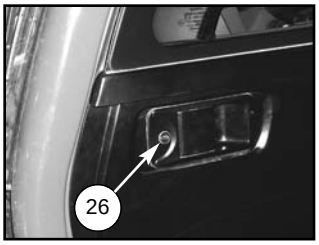

27 - LOCKING HANDLE FOR UPPER HALF DOOR

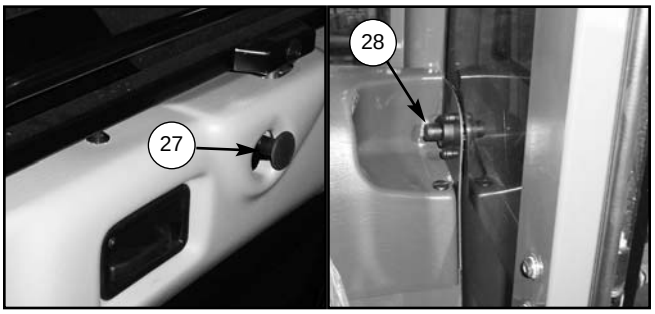

28 - RELEASING BUTTON FOR UPPER HALF DOOR

29 - HANDLE FOR REAR WINDOW OPENING

EMERGENCY EXIT

Use the rear window as an emergency exit, if it is not possible to leave the cab by the door.

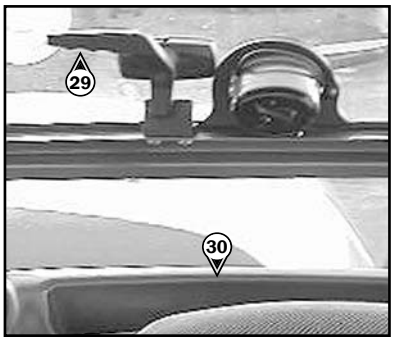

30 - MANUAL HOLDER

Ensure that the operator's manual is in its place in the document holder.

31 - FRONT LIGHTS

A - Left front indicator
B - Left front dipped headlight
C - Left front main beam
D - Left front sidelight
E - Right front indicator
F - Right front dipped headlight
G - Right front main beam
H - Right front sidelight

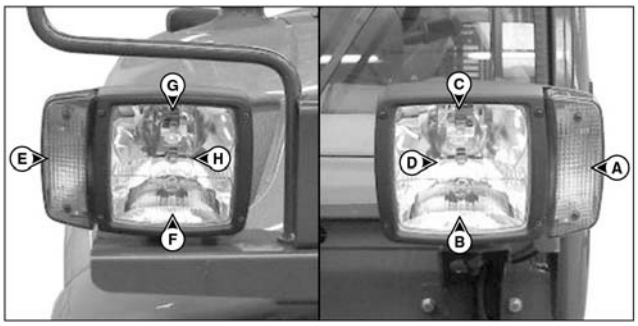

32 - REAR LIGHTS

A - Left rear indicator
B - Left rear stoplight
C - Left tail light
D - Left rear reverse light
E - Left rear fog light
F - Right rear fog light
G - Right rear reverse light
H - Right tail light
I - Right rear stoplight
J - Right rear indicator

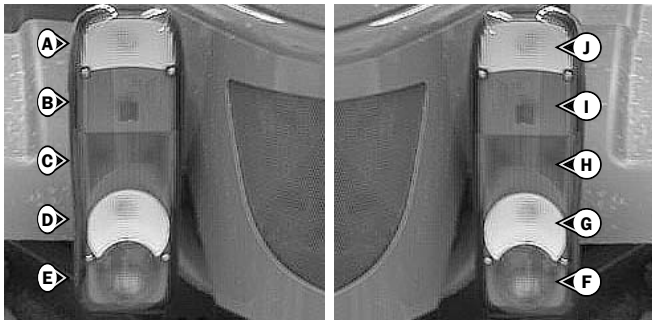

33 - ENGINE BLOCK HEATER

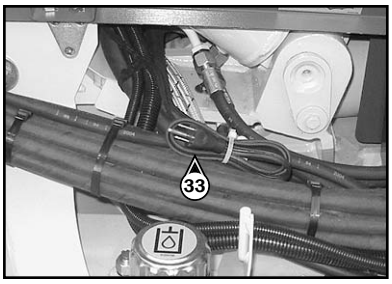

34 - INCLINOMETER

Enables the operator to check that the telescopic handler is in the horizontal position.

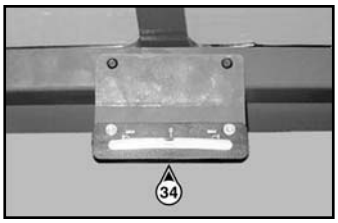

35 - STEERING WHEEL POSITIONING HANDLE - CT6-18 Turbo

This handle enables the angle and height of the steering wheel to be adjusted.

- Turn handle (1) toward A to loosen and adjust steering wheel.
- Turn handle (1) toward B to lock steering wheel in the position required.

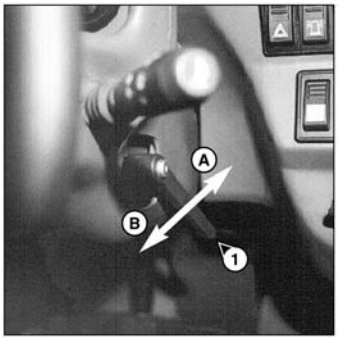

36 - ARM REST - CT6-18 Turbo

The arm rest can be adjusted in height.

- Untighten screws (1) and adjust arm-rest to the height desired.
- Retighten screws (1).

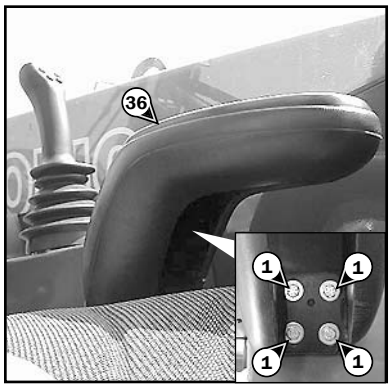

37 - RADIO

To prevent discharging the telescopic handler's battery, the radio must be turned off when leaving the machine for extended periods of time. The radio remains on when the ignition key is turned to the "off" position. Press button (1) on the radio until the display on the radio turns off. Review the radio manual provided with the machine for further radio operation controls.

TOW PIN

Located at the rear of the telescopic handler, this device is used to attach a trailer. Its capacity is limited for each telescopic handler by the authorized gross vehicle weight, tractive effort and maximum vertical force on the coupling point. This information is given on the manufacturer's plate fixed to each telescopic handler (see chapter: 1 - SPECIFICATIONS AND CONTROLS: IDENTIFICATION OF THE TELESCOPIC HANDLER).

- To use a trailer, see current regulations in your state/province (maximum running speed, braking, maximum weight of trailer, etc.).
- Verify the trailer's condition before using it (tire condition and pressures, electrical connection, hydraulic hose, braking system).

WARNING

Do not tow a trailer that is not in good working condition. Using a trailer in poor condition may affect the telescopic handler's steering and braking, and cause an accident.

WARNING

If an assistant helps in connecting or disconnecting the trailer, this person must always be visible to the operator and wait until the telescopic handler has stopped, the parking brake is applied and the engine is stopped before performing the operation.

A - TOW PIN

CONNECTING AND DISCONNECTING A TRAILER

- To connect a trailer, position the telescopic handler as close as possible to the trailer hitch ring.
- Apply the parking brake and turn off the engine.
- Remove the clip (1,) lift the tow pin (2) and insert (or remove) the trailer hitch ring.

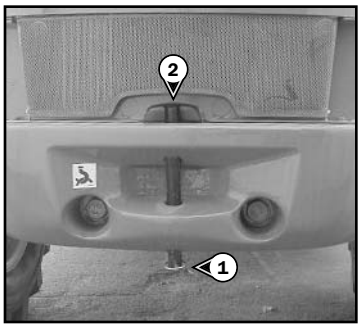

WARNING

Be careful not to get your fingers caught or crushed during this operation.

Do not forget to put clip (1) back in place.

When uncoupling, make sure that the trailer is independently supported.

B - TRAILER ELECTRIC CONNECTOR

This 7-pin connector enables electrical power supply connection for a trailer or signal bar.

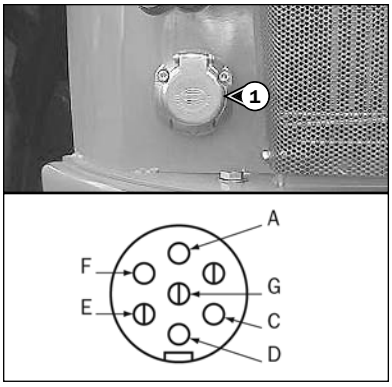

A - Left turn indicator

C - Ground

D - Right turn indicator

E - Right tail light

F - Rear stoplight

G - Left tail light

Chapter 6

MAINTENANCE

GEHL TELESCOPIC HANDLERS MUST BE SERVICED USING GEHL ORIGINAL EQUIPMENT SERVICE PARTS.

IF PARTS ARE USED THAT ARE NOT GEHL ORIGINAL EQUIPMENT SERVICE PARTS, YOU RISK:

- legally - being held responsible in the event of an accident, and
- technically - causing an operating failure or shortening the life of the telescopic handler.

THE USE OF COUNTERFEIT PARTS OR COMPONENTS NOT APPROVED BY THE MANUFACTURER MEANS YOU LOSE THE BENEFIT OF THE WARRANTY.

BY USING GEHL ORIGINAL EQUIPMENT PARTS FOR MAINTENANCE OPERATIONS, YOU BENEFIT THROUGH ITS DEALER NETWORK, WHICH PROVIDES USERS WITH:

- Expert know-how and competence,
- guarantee of high-quality work,
- original equipment replacement components,
- help with preventive maintenance,
- efficient help with diagnosis,
- improvements due to experience feedback, and
- operator training.

Only the GEHL dealer network has detailed knowledge of the design of the telescopic handler, and therefore has the best technical ability to provide maintenance.

ORIGINAL EQUIPMENT REPLACEMENT PARTS ARE DISTRIBUTED EXCLUSIVELY BY GEHL COMPANY AND ITS DEALER NETWORK.

A Gehl “Dealer Locator” is available on the Gehl Company website: www.gehl.com

LUBRICANTS AND FUEL

SYSTEM/COMPONENT	CAPACITY	RECOMMENDED
ENGINE		
CRANKCASE	9 quarts (8.5 liters)	API CH-4
COOLING SYSTEM	19 quarts (18 liters)	Ethylene Glycol/Water Solution (protection -30° F)
FUEL TANK	27-1/2 gallons (104 liters)	Diesel Fuel (*)
TRANSMISSION	15-1/4 quarts (14.5 liters)	Automatic Transmission Fluid
TRANS. UNIVERSAL JOINT		No. 2 Lithium-Based Grease
BOOM		
WEAR PADS		No. 2 Lithium-Based Grease
GREASING THE BOOM		No. 2 Lithium-Based Grease
HYDRAULIC SYSTEM		
HYDRAULIC OIL RESERVOIR	35-1/2 gallons (135 liters)	Hydraulic ISO VG46 (Mobil DTE 15 M or equal)
BRAKE SYSTEM		
BRAKE CIRCUIT		ATF Dexron II
CAB		
CAB DOOR		No. 2 Lithium-Based Grease
WINDSHIELD WASHER RESERVOIR		Windshield Washer Fluid
FRONT AXLE DIFFERENTIAL	5-3/4 quarts (5.5 liters)	API GL5, SAE 85W90
REAR AXLE DIFFERENTIAL	6-3/4 quarts (6.35 liters)	API GL5, SAE 85W90
FRONT WHEEL PLANETARIES	1-1/2 pints (0.75 liters)	API GL5, SAE 85W90
REAR WHEEL PLANETARIES	1-1/2 pints (0.75 liters)	API GL5, SAE 85W90
FRONT AND REAR WHEEL STEERING SPINDLES		No. 2 Lithium-Based Grease
REAR AXLE OSCILLATION		No. 2 Lithium-Based Grease
TRANSFER BOX	1-1/4 pints (0.6 liters)	API GL5, SAE 85W90

IMPORTANT: *Use only the recommended lubricants and fuel.*

NOTE: *For topping up, all oils may not be compatible.*

(*) FUEL CHARACTERISTICS

Use a high-quality diesel fuel to obtain optimal performance of the engine.

FILTERS CARTRIDGES AND BELTS (CT6-18)

ENGINE

ENGINE OIL FILTER
Part number: 219975
Change: 500 H

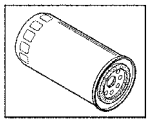

DRY AIR FILTER CARTRIDGE
Part number: 219980
Clean: 50 H*
Change: 500 H*

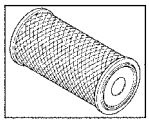

SAFETY DRY AIR FILTER CARTRIDGE
Part number: 219979
Change: 1000 H*

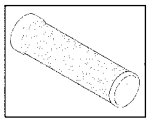

FUEL FILTER CARTRIDGE
Part number: 219994
Change: 500 H

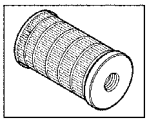

ALTERNATOR BELT
Part number: 219996

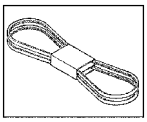

TRANSMISSION

TRANSMISSION OIL FILTER
Part number: 219976
Change: 500 H

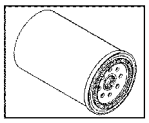

HYDRAULICS

HYDRAULIC RETURN OIL FILTER CARTRIDGE (15µ)
Part number: 217785
Change: 500 H

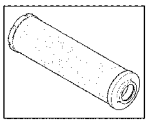

FILTER CAP FOR HYDRAULIC OIL TANK
Part number: 219937
Change: 1000 H

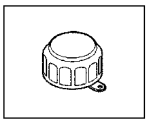

SUCTION STRAINER FOR HYDRAULIC OIL TANK
Part number: 219945
Clean: 1000 H

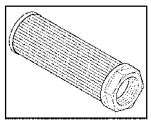

CAB

CAB VENTILATION FILTER (WITHOUT AIR CONDITIONING)
Part number: 217786
Clean: 500 H

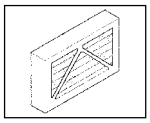

* This service interval is given for information only for cleaning and changing. (see chapter: 3 - MAINTENANCE: SERVICING SCHEDULE)

FILTERS CARTRIDGES AND BELTS (CT6-18 Turbo)

ENGINE

ENGINE OIL FILTER
Part number: 219975
Change: 500 H

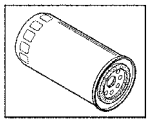

DRY AIR FILTER CARTRIDGE
Part number: 219980
Clean: 50 H*
Change: 500 H*

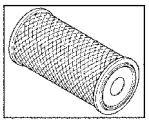

SAFETY DRY AIR FILTER CARTRIDGE
Part number: 219979
Change: 1000 H*

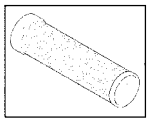

FUEL FILTER CARTRIDGE
Part number: 219994
Change: 500 H

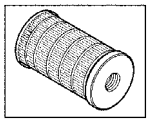

ALTERNATOR BELT
Part number: 219996

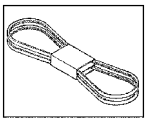

CYCLONIC PRE-FILTER
Part number: 218591
Clean: 10 H

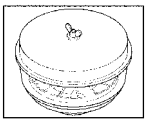

TRANSMISSION

TRANSMISSION OIL FILTER
Part number: 219976
Change: 500 H

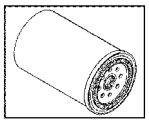

HYDRAULICS

HYDRAULIC RETURN OIL FILTER CARTRIDGE (15µ)
Part number: 217785
Change: 500 H

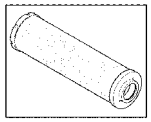

FILTER CAP FOR HYDRAULIC OIL TANK
Part number: 219937
Change: 1000 H

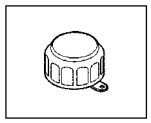

SUCTION STRAINER FOR HYDRAULIC OIL TANK
Part number: 219945
Clean: 1000 H

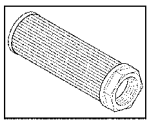

CAB

CAB VENTILATION FILTER (WITHOUT AIR CONDITIONING)
Part number: 217786
Clean: 500 H

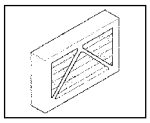

* This service interval is given for information only for cleaning and changing. (see chapter: 3 - MAINTENANCE: SERVICING SCHEDULE)

MAINTENANCE INSTRUCTIONS

GENERAL INSTRUCTIONS

- Ensure the area is sufficiently ventilated before starting the telescopic handler.
- Wear clothes suitable for the maintenance of the telescopic handler. Avoid wearing jewelery and loose clothes. Tie and protect your hair, if necessary.
- Stop the engine and remove the ignition key, when service is necessary.
- Read the operator's manual carefully.
- Carry out all repairs immediately, even if the repairs are minor.
- Repair all leaks immediately, even if the leak is minor.
- Make sure that the disposal of materials and of service parts is carried out in total safety and in a ecological way.
- Be careful of the risk of burning and splashing (exhaust, radiator, engine, etc.).

MAINTENANCE

- Perform the periodic service (see chapter: 6 - MAINTENANCE) to keep the telescopic handler in good working conditions. Failure to perform the periodic service may void the waranty.

LUBRICANT AND FUEL LEVELS

IMPORTANT: *For operation under normal climatic conditions, i.e.: between 5°F and 95°F, correct types of lubricants in all the systems are provided from the factory. For operation under more severe climatic conditions, before starting up, it may be necessary to drain some or all the systems, and ensure correct types of lubricants and coolant properly suited to the ambient temperatures.*

- Use the recommended lubricants. Never use contaminated lubricants.
- Do not fill the fuel tank when the engine is running.
- Only fill the fuel tank in areas specified for this purpose.
- Do not fill the fuel tank to the maximum level.
- Do not smoke or approach the telescopic handler with an open flame, when the fuel tank is open or is being filled.

HYDRAULIC SYSTEM

- Do not attempt to loosen connections, hoses or any hydraulic component with the circuit under pressure.

WARNING

COUNTER-BALANCE VALVES: For inspection, see chapter: 6 – MAINTENANCE: D7 - EVERY 500 HOURS SERVICE. It is hazardous to change the setting or remove the counter-balance valves or other safety valves that may be fitted to the telescopic handler cylinders. These operations must only be performed by trained personnel (consult your dealer).

WARNING

HYDRAULIC ACCUMULATORS, which may be on your telescopic handler, are under pressure and it is hazardous to disassemble them. This operation must only be performed by trained personnel (consult your dealer).

ELECTRICAL SYSTEM

- Do not short-circuit the starter relay to start the telescopic handler. If the forward/reverse shifter is not in neutral, the telescopic handler will start to move immediately.
- Do not drop metal items on the battery.
- Disconnect the battery before working on the electrical system.

WELDING

- Disconnect the battery before performing any welding operations on the telescopic handler.
- When carrying out electric welding work on the telescopic handler, connect the negative cable for the welding equipment directly to the part being welded, to avoid high voltage current passing through the alternator.

- Never perform welding or work that gives off heat on an assembled tire. The heat would increase the tire pressure, which could cause the tire to explode.
- If the telescopic handler is equipped with an electronic control unit, disconnect this before starting to weld, to avoid the risk of causing permanent damage to electronic components.

WASHING THE TELESCOPIC HANDLER

- Clean the telescopic handler or at least the area concerned before any servicing.
- Remember to close and lock all accesses to the telescopic handler (door, window, …).
- During washing, avoid the pinch points and electrical components and connections.
- If necessary, protect components susceptible to being damaged, against the penetration of water, steam or cleaning agents, particularly electrical components and connections and the injection pump.
- Clean the telescopic handler of any fuel, oil or grease and grime.

IMPORTANT: *For any service other than regular maintenance, consult your dealer.*

STORAGE INSTRUCTIONS

The following recommendations are intended to prevent the telescopic handler from being damaged when it is withdrawn from service for an extended period.

IMPORTANT: *Procedures to follow if the telescopic handler is not to be used for a long time and for starting it up again afterward are best performed by a dealer.*

PREPARING THE TELESCOPIC HANDLER

- Clean the telescopic handler thoroughly.
- Check and repair any leakage of fuel, oil, water or air.
- Replace or repair any worn or damaged parts.
- Wash the painted surfaces of the telescopic handler with clean clear water and wipe them dry.
- Touch up the paint if necessary.
- Shut down the telescopic handler (see chapter: 4 OPERATING AND SAFETY INSTRUCTIONS: STOPPING THE TELESCOPIC HANDLER).
- Make sure the boom cylinder rods are all in retracted position.
- Relieve the pressure in the hydraulic circuits.

PROTECTING THE ENGINE

- Fill the fuel tank (see chapter: 6 - MAINTENANCE: A - DAILY OR EVERY 10 HOURS SERVICE).
- Drain and replace the coolant (see chapter: 6 - MAINTENANCE: F - EVERY 2000 HOURS SERVICE).
- Leave the engine running at idle speed for a few minutes, then turn off.
- Replace the engine oil and oil filter (see chapter: 6 - MAINTENANCE: D - EVERY 500 HOURS SERVICE).
- Add the protective product to the engine oil.
- Run the engine for a short time so that the oil and coolant circulate.
- Disconnect the battery after charging it, and store it in a safe place away from the cold.
- Remove the injectors and spray the protective product into each cylinder for two seconds with the piston at bottom dead center.
- Turn the crankshaft once slowly and reinstall the injectors (see engine manual).
- Remove the intake hose from the manifold or turbocharger and spray the protective product into the manifold or turbocharger.
- Cap the intake manifold or turbocharger inlet with waterproof adhesive tape.
- Remove the exhaust pipe and spray the protective product into the exhaust manifold or turbocharger.

IMPORTANT: *The spray time is noted on the product packaging and must be increased by 50% for turbo engines.*

- Reinstall the exhaust pipe and block the outlet with waterproof adhesive tape.
- Open the oil filler cap, spray the protective product around the rocker arm shaft and reinstall the filler cap.

- Cap the fuel tank using waterproof adhesive tape.
- Remove the drive belts and store them in a safe place.
- Disconnect the engine fuel cut-off solenoid on the injection pump and carefully insulate the connection.

PROTECTING THE TELESCOPIC HANDLER

- Set the telescopic handler on axle stands so that the tires are not in contact with the ground and release the parking brake.
- Protect cylinder rods that will not be retracted from corrosion.
- Wrap the tires.

IMPORTANT: *If the telescopic handler is to be stored outdoors, cover it with a waterproof tarpaulin.*

RETURNING THE TELESCOPIC HANDLER INTO SERVICE

- Remove the waterproof adhesive tape from all the inlets.
- Reinstall the intake hose.
- Reinstall and reconnect the battery.
- Remove the protection from the cylinder rods.
- Perform the daily service (see chapter: 6 - MAINTENANCE: A - DAILY OR EVERY 10 HOURS SERVICE).
- Apply the parking brake and remove the axle stands.
- Drain and replace the fuel, and replace the fuel filter (see chapter: 6 - MAINTENANCE: D - EVERY 500 HOURS SERVICE).
- Reinstall and adjust the tension in the drive belts (see chapter: 6 - MAINTENANCE: C - EVERY 250 HOURS SERVICE).
- Turn the engine using the starter, to allow the oil pressure to rise.
- Reconnect the engine fuel cut-off solenoid.
- Lubricate the telescopic handler completely (see chapter: 6 - MAINTENANCE: SERVICING SCHEDULE).
- Start up the telescopic handler, following the safety instructions (see chapter: 4 - OPERATING AND SAFETY INSTRUCTIONS).

WARNING

Make sure the area is adequately ventilated before starting the telescopic handler.

- Run all the boom's hydraulic movements, concentrating on the ends of travel for each cylinder.

TOWING THE TELESCOPIC HANDLER

WARNING

Do not tow the telescopic handler at more than 15 mph (40 km/h).

TOWING

- Place the forward/reverse lever and the gear shift in neutral.
- Release the parking brake.
- Switch on the hazard warning lights.
- If the engine is not running, there will be no steering or braking assistance. Operate the steering and brake pedal slowly, avoiding sudden jerky movements.

LIFTING THE TELESCOPIC HANDLER

- Take into account the position of the telescopic handler center-of-gravity for lifting (fig. 1/1).

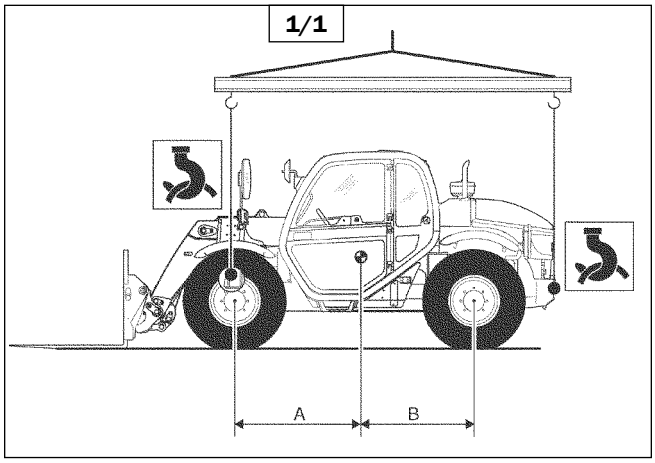

A = 52 inches, B = 47 inches for CT6-18

A = 52 inches, B = 47 inches for CT6-18 Turbo

➲ Place the hooks in the fastening points provided (fig. 1/2 and 1/3).

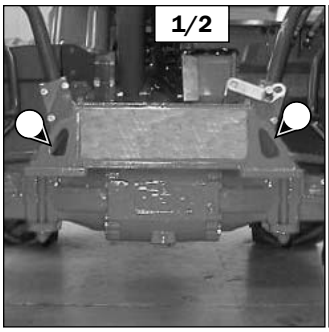

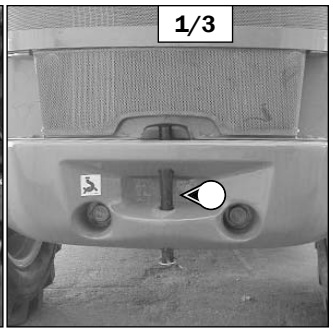

LOADING THE TELESCOPIC HANDLER ON A TRAILER

WARNING

Ensure that the safety instructions for the trailer are followed before loading the telescopic handler, and that the driver of the truck knows the dimensions and the weight of the telescopic handler (see chapter: 1 - SPECIFICATIONS: SPECIFICATIONS).

WARNING

Ensure that the trailer has the size and load capacity sufficient for transporting the telescopic handler.

IMPORTANT: *For telescopic handlers equipped with a turbocharged engine, block off the exhaust outlet to avoid rotation of the turbocharger without lubrication when transporting the machine.*

LOADING THE TELESCOPIC HANDLER

➲ Block the wheels of the trailer.

➲ Attach the loading ramps to obtain an angle as low as possible to load the telescopic handler.

➲ Load the telescopic handler parallel to the trailer.

➲ Stop the telescopic handler (see chapter: 2 - OPERATING AND SAFETY INSTRUCTIONS: OPERATOR INSTRUCTIONS).

TYING DOWN THE TELESCOPIC HANDLER

➲ Insert wheel chocks to the trailer at the front and back of each tire (fig. 2/1).

➲ Secure wheel chocks to the platform on the inside of each tire (fig. 2/2).

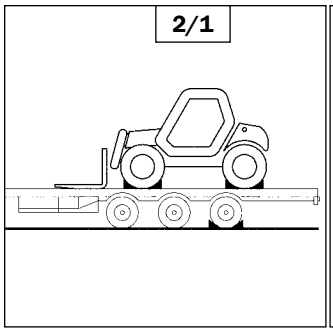

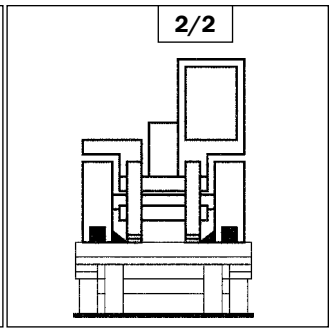

➲ Tie down the telescopic handler on the trailer with chains and binders, at the front of the telescopic handler, at the tie-down points (1) (fig. 2/3), and at the back, at the tow pin (2) (fig. 2/4).

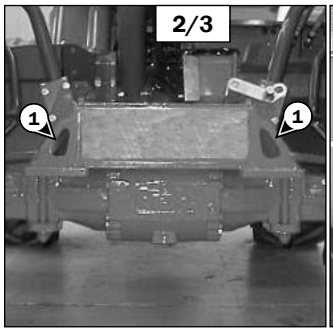

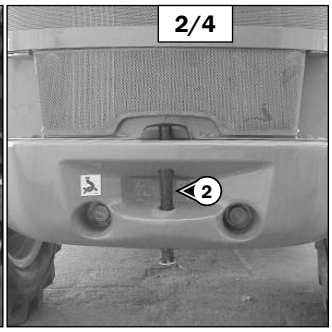

➲ Tighten the chains and binders (fig. 2/5).

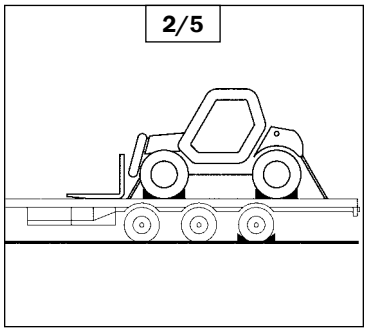

SERVICING SCHEDULE

A = ADJUST C = CHECK D = DESCALE G = GREASE	N = CLEAN P = BLEED R = CHANGE V = DRAIN	After the first 50 hours	Day or 10 hours	50 hours	250 hours	1 year or 500 hours	1 year or 1000 hours	2000 hours	4000 hours
ENGINE									
Engine oil level			C						
Cooling liquid level			C						
Fuel level			C						
Cyclonic prefilter			N						
Dry air filter cartridge				N		R			
Radiator core				N					
Alternator/crankshaft belt tension		A			A				
Engine oil		V				V			
Engine oil filter		R				R			
Fuel filter cartridge		R				R			
Fuel tank							N		
Safety dry air filter cartridge							R		
Engine silent blocks							C**		
Engine rates							C**		
Valves clearances		C**					C**		
Cooling liquid								V	
Radiator								N/D**	
Water pump and the thermostat								C**	
Alternator and the starter motor								C**	
Turbocharger								C**	
TRANSMISSION									
Transmission oil level			C						
Transmission universal joint				G					G/C**
Transmission oil filter		R				R			
Transmission oil		V					V		
Transmission housing strainer							N		
Transmission silent blocks							C**		
Transmission controls							C**		
Transmission pressures								C**	
Converter pressure								C**	
TIRES									
Tires pressure			C						
Wheel nuts torque			C						
Condition of wheels and tires							C**		
Change a wheel									
BOOM									
Boom pads			G*						
Boom				G					
Boom pads wear							C**		
Condition of boom unit								C**	
Bearings and articulation rings								C**	
HYDRAULICS									
Hydraulic oil level				C					
Hydraulic return oil filter cartridge		R				R			
Balancing valve		C				C			
Hydraulic oil							V		
Suction strainer for hydraulic oil tank							N		
Filter cap for hydraulic oil tank							R		
Speeds of hydraulic movements							C**		
Hydraulic pump pipe filter							N**		
Condition of hoses and flexibles pipes							C**		
Condition of cylinders (leakage, shafts)							C**		
Hydraulic circuit pressures								C**	
Hydraulic circuit outputs								C**	
Hydraulic oil tank								N**	

A = ADJUST C = CHECK D = DESCALE G = GREASE	N = CLEAN P = BLEED R = CHANGE V = DRAIN	After the first 50 hours	Day or 10 hours	50 hours	250 hours	1 year or 500 hours	1 year or 1000 hours	2000 hours	4000 hours
BRAKE									
Brake oil level				C					
Parking brake					C/A				
Parking brake lever mechanism						G			
Parking brake mechanism on the transmission						G**			
Brake oil							V**		
Brake circuit							P**		
Brake circuit pressure							C**		
Brake							A**		
STEERING									
Steering								C**	
Steering swivel joints									C**
CAB									
Windshield washer liquid level				C					
Cab door				G					
Cab ventilation filter				N	R				
Seat belt							C		
Condition of the rear view mirrors							C**		
Structure							C**		
ELECTRICITY									
Battery electrolyte level				C					
Battery electrolyte density						C			
Condition of wiring harness and cables							C**		
Lights and signals							C**		
Warning indicators							C**		
FRONT AND REAR AXLES									
Front wheels reducers pivots				G					G/C**
Transfer box oil level					C				
Front axle differential oil level					C				
Front wheels reducers oil level					C				
Transfer box oil		V				V			
Front axle differential oil		V				V			
Front wheels reducers oil		V					V		
Wearing of front axle brake discs								C**	
Front wheels reducers universal joint									C**
Front wheels reducers clearance									C**
Bearings clearance of the transfer box									C**
Rear wheels reducers pivots				G					G/C**
Rear axle oscillation				G				G/C**	
Rear axle differential oil level					C				
Rear wheels reducers oil level					C				
Rear axle differential oil		V				V			
Rear wheels reducers oil		V					V		
Wearing of rear axle brake discs									C**
Rear wheels reducers universal joint									C**
Rear wheels reducers clearance									C**
CHASSIS									
Structure							C**		
Bearings and articulation rings								C**	
ATTACHMENTS									
Forks wear						C**			
Attachment carriage							C**		
Condition of attachments							C**		

(*) : Every 10 hours during the first 50 hours, then once at 250 hours.
(**) : Consult your dealer.

A - DAILY OR EVERY 10 HOURS OF SERVICE

A1 - ENGINE OIL LEVEL

CHECK

Park the telescopic handler on level ground with the engine stopped, and let the oil drain into the oil pan.

- Open the engine cover.
- Remove the dipstick (1) (fig. A1).
- Wipe the dipstick and check for the correct level at the upper mark.
- If necessary, add oil (see chapter: 6 - MAINTENANCE: LUBRICANTS AND FUEL) at the filler port (2) (fig. A1).

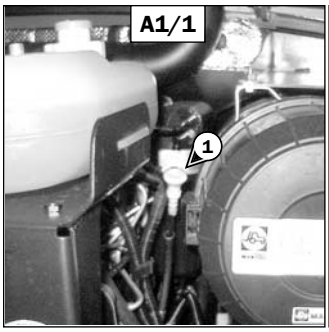

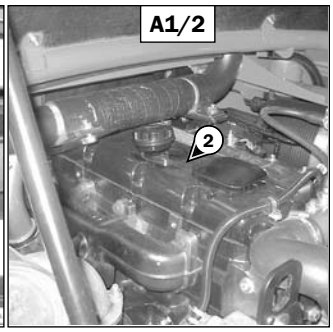

- Visually check that there is no leakage of oil from the engine.

A2 - COOLING LIQUID LEVEL

CHECK

Park the telescopic handler on level ground with the engine stopped, and allow the engine to cool.

- Open the engine cover.
- Check the correct level in the middle of expansion chamber (1) (fig. A2).

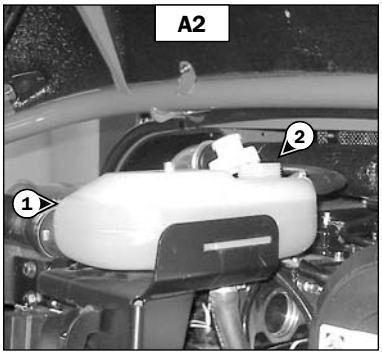

- If necessary, add coolant (see chapter: 6 - MAINTENANCE: LUBRICANTS AND FUEL) by the filler port (2) (fig. A2).
- Visually check that there are no leaks in the radiator and hoses.

WARNING

To avoid the risk of spraying and scalding, wait until the engine has cooled down before removing the cooling system filler plug. If the coolant is very hot, add only hot coolant 176°F (80°C). In an emergency, you can use water as a coolant, and then change the coolant as soon as possible (see chapter: 6 - MAINTENANCE: F1 - COOLANT).

A3 - FUEL LEVEL

CHECK

Keep the fuel tank full, to reduce condensation due to atmospheric humidity.

- Open the right side cover.
- Remove cap (1) (fig. A3).

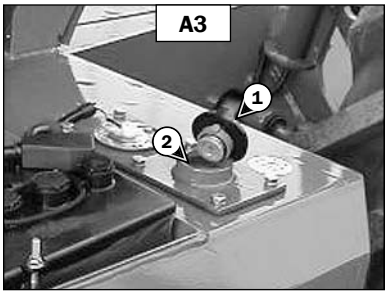

- Fill the fuel tank with clean fuel (see chapter: 6 - MAINTENANCE: LUBRICANTS AND FUEL), filtered through a strainer or a clean, lint-free cloth, through the filler neck (2) (fig. A3).
- Replace the cap (1) (fig. A3).
- Visually check that there is no leakage from the tank and hoses.

WARNING

Never smoke or have an open flame nearby during filling operations or when the tank is open.

Never refuel while the engine is running.

IMPORTANT: *The fuel tank is vented through the filler cap. When changing it, always use an original part, with a vent.*

NOTE: *A locking fuel filler cap is available as an OPTION.*

A4 - CYCLONIC PRE-FILTER

CLEAN

The cleaning interval is given as a guide; however, the pre-filter must be emptied as soon as impurities reach the MAX level on the collector bowl.

- Loosen nut (1) (fig. A4), remove cover (2) (fig. A4) and empty the collector bowl.
- Clean the pre-filter unit with a clean dry cloth and re-assemble the unit.

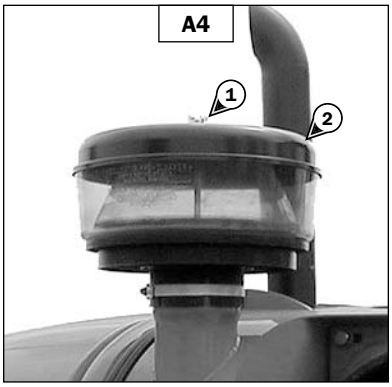

IMPORTANT: *When cleaning the pre-filter, take care not to let impurities into the dry air filter.*

A5 - TRANSMISSION OIL LEVEL

CHECK

Park the telescopic handler on level ground with the boom raised, the engine stopped and cold.

Check the oil level within five minutes of the engine being stopped.

- Remove the plastic cap (1) (fig. A5).
- Remove the dipstick (2) (fig. A5).
- Wipe the dipstick and check for the correct level between the MIN and MAX marks.
- If necessary, add oil (see chapter: 6 - MAINTENANCE: E3 TRANSMISSION OIL).
- Visually check that there is no leakage of oil from the transmission.

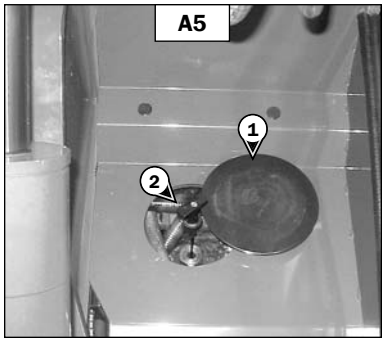

A6 - TIRES PRESSURE AND WHEEL NUTS TORQUE

CHECK

- Check the condition of the tires, to detect cuts, bulges, wear, etc.
- Check the torque of the wheel nuts.

IMPORTANT: *Loose wheel nuts can cause damage and failure of the wheel bolts and distortion to the wheels.*

Wheel nuts tightening torque:

- Front wheels: 465 ft.-lbs. (630 Nm) ± 15 %
- Rear wheels: 465 ft.-lbs. (630 Nm) ± 15 %

- Check and adjust the tire pressures if necessary (see chapter: 1 - SPECIFICATIONS).

WARNING

Check that the air hose is correctly connected to the tire valve before inflating. Keep everyone away during inflation.

Follow the recommended tire pressures.

WARNING

Inflating or servicing tires can be hazardous. Whenever possible, only trained personnel should service and mount tires. To avoid possible death or serious injury, follow the safety precautions below:

1. **Be sure the rim is clean and free of rust.**
2. **Lubricate both the tire beads and rim flanges with a soap solution. DO NOT use oil or grease.**
3. **DO NOT place your fingers on the tire bead or rim during inflation. Use a clip-on tire chuck with a remote hose and gauge, which allows you to stand clear of the tire while inflating it.**
4. **NEVER inflate beyond 35 psi (240 kPa) to seat the beads. If the beads have not seated by the time the pressure reaches 35 psi (240 kPa), deflate the assembly, reposition the tire on the rim, relubricate both parts and re-inflate. Inflation pressure beyond 35 psi (240 kPa) with unseated beads may break the bead or rim with explosive force sufficient to cause death or serious injury.**

5. **After seating the beads, adjust the inflation pressure to the recommended operating pressure listed.**
6. **DO NOT weld, braze, or otherwise attempt to repair and use a damaged rim.**

A7 - BOOM WEAR PADS

CLEAN - GREASE

To be carried out every 10 hours during the first 50 hours service, then once at 250 hours.

- Extend the boom completely.
- With a brush, apply a coat of grease (see chapter: 6 - MAINTENANCE: LUBRICANTS AND FUEL) on the four sides of the telescoping sections (fig. A7).

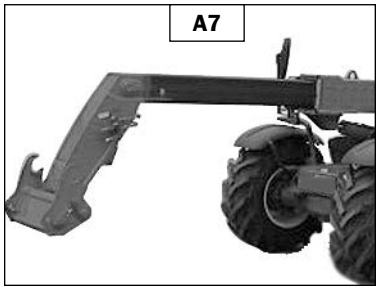

- Telescope the boom several times in order to spread the grease evenly.
- Remove any excess grease.

IMPORTANT: *If the telescopic handler is used in an abrasive environment (dust, sand, coal…), use lubricating oil instead. Consult your dealer.*

A8 - GENERAL MACHINE OPERATION AND CONDITION

CHECK

Are any decals missing or damaged? Are all guards, shields and covers in place? Do all controls function smoothly and properly? Are there any abnormal vibrations or noises? Are any hose or fitting connections leaking? Is the engine exhaust color normal?

⚠ WARNING

Manufacturers of push-pull control cables advise taking the following operation and maintenance precautions:

Do not adjust the control cable with the engine running.

A gradual or sudden increase in the no-load friction (cable disconnected at both ends) of a control cable is an indication of an impending or present performance problem. The control cable should be replaced.

A gradual or sudden decrease in the useable travel is a indication of an impending or present performance problem. The cable should be replaced.

Control cables that have moisture inside of them and/or have frozen should be replaced. Do not apply heat to thaw or dry control cables.

Control cable are lubricated for the life of the control cable. Do not remove the seals or lubricate the control cable.

Control cables are designed to be non-repairable. Do not attempt to repair control cables.

Failure to heed could result in death or serious injury.

B - EVERY 50 HOURS OF SERVICE

Perform the operations described previously as well as the following operations:

B1 - DRY AIR FILTER CARTRIDGE

CHECK - CLEAN

In case of use in a very dusty atmosphere, there are pre-filtration cartridges (see chapter: 6 - MAINTENANCE: FILTER CARTRIDGES AND BELTS). Also, the checking and cleaning period of the cartridge must be reduced.

IMPORTANT: *If the clogged filter indicator light comes on, this operation must be carried out as quickly as possible (1 hour maximum). The cartridge must not be cleaned more than seven times, after which the cartridge must be changed.*

- For the disassembly and reassembly of the cartridge, see chapter: 6 - MAINTENANCE: D3 - DRY AIR FILTER CARTRIDGE.
- Clean the filter cartridge using a compressed air jet (max. pressure 30 psi (2 bar) directed from the top to the bottom and from the inside toward the outside at a minimum distance of 1 inch (25 mm) from the cartridge wall.

- Cleaning is completed when there is no more dust on the cartridge.

IMPORTANT: *Keep the safe distance of 1 inch (25 mm) between the air jet and the cartridge to avoid tearing or making a hole in the cartridge. The cartridge must not be blown out near the air filter box. Never clean the cartridge by tapping it against a hard surface. (Protect your eyes during this procedure.)*

- Clean the cartridge seal surfaces with a damp, clean lint-free cloth and grease with a silicone lubricant.
- Visually check the outer condition of the air filter and its mounts. Also verify the condition of the hoses and their connections.

IMPORTANT: *Do not clean the dry air filter cartridge by washing it. Do not clean the safety cartridge located inside the filter cartridge. Instead, replace it if it is dirty or damaged.*

B2 - RADIATOR CORE

CLEAN

IMPORTANT: *In a dirty atmosphere, clean the radiator every day. Do not use a water jet or high-pressure steam, because this could damage the radiator fins.*

- Open the engine cover.
- In order to prevent the radiator becoming clogged, clean the radiator with a compressed air jet directed from inside to outside. This is the only way to clean the core of debris.
- If necessary, clean the screen on the engine cover.

B3 - AIR CONDITIONING CONDENSER CORE

CLEAN

IMPORTANT: *In a dirty atmosphere, clean the condenser core every day. Do not use a water jet or high-pressure steam, because this could damage the fins.*

- Open the engine cover.
- Loosen the knurled screw (1) (fig. B3/1) and swing out the filter and condenser unit.
- Clean the core with a blast of compressed air aimed from the inside toward the outside (fig. B3/2). This is the only effective way of cleaning the core.

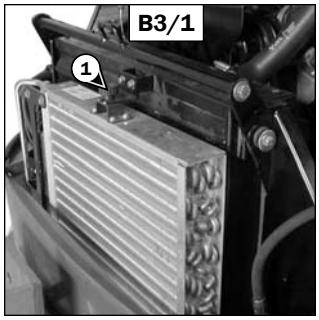

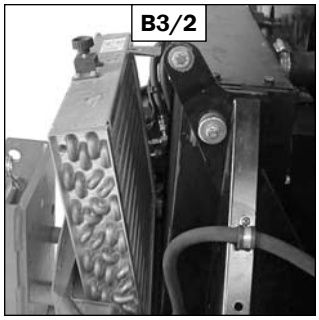

B4 - BOOM

GREASE

To be performed weekly, even if the telescopic handler has been operated for less than 50 hours during the week.

IMPORTANT: *In the event of prolonged use in an extremely dusty or caustic atmosphere, reduce the service interval to 10 working hours or daily.*

Clean and lubricate the following points with grease (see chapter: 6 - MAINTENANCE: LUBRICANTS AND FUEL). Remove any excess grease.

- Grease fittings for the boom pivot shaft (1) (fig. B4/1).
- Grease fittings of the carriage pivot (2) (fig. B4/2).

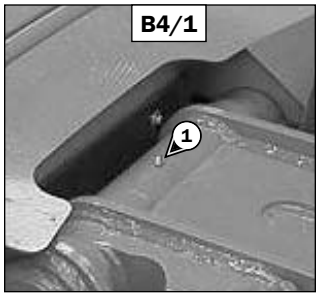

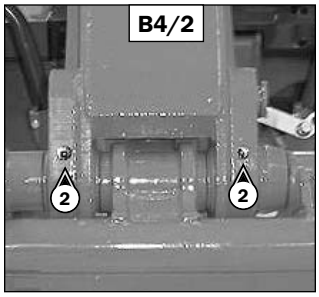

- Grease fitting for the tilt cylinder base end (1) (fig. B4/3).
- Grease fitting for the tilt cylinder rod end (1) (fig. B4/4).

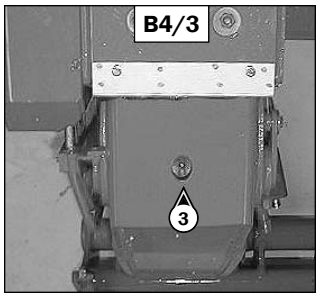

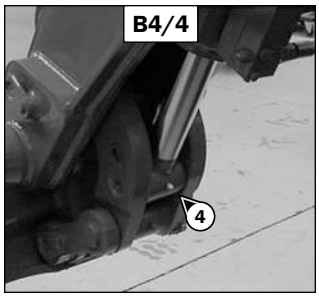

- Grease fittings for the carriage connecting rod shaft (2) (fig. B4/5).
- Grease fitting for the lift cylinder base end (1) (fig. B4/6).

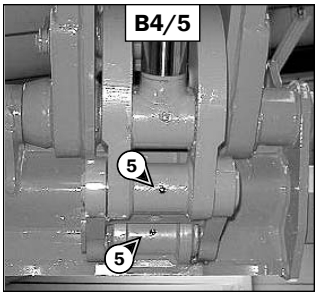

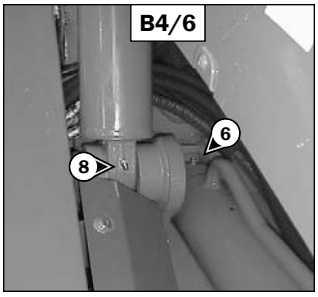

- Grease fitting for the lifting cylinder rod end (1) (fig. B4/7).
- Grease fitting for the slave cylinder base end (1) (fig. B4/6).
- Grease fitting for the slave cylinder rod end (1) (fig. B4/8).

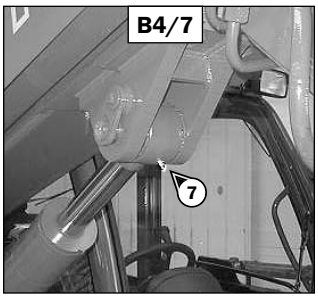

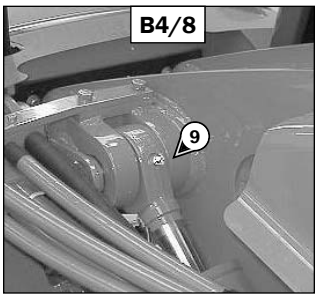

B5 - HYDRAULIC OIL LEVEL

CHECK

Park the telescopic handler on level ground with the engine stopped, and the boom retracted and lowered as far as possible.

- Refer to sight gauge (1) (fig. B5/1).
- The oil level is correct when it is at the level of the red point.
- If necessary, add oil (see chapter: 6 - MAINTENANCE: LUBRICANTS AND FUEL).
- Open the right side cover.
- Remove filler cap (2) (fig. B5/2).
- Add oil at filler neck (3) (fig. B5/2).

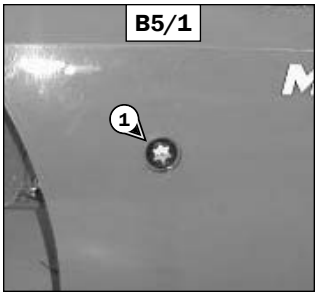

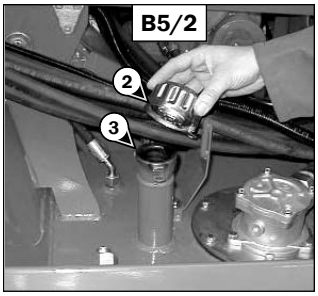

- Replace the cap.
- Visually check that there is no leakage from the reservoir and pipes.

Always maintain the oil level at the maximum, because cooling depends on oil flowing through the reservoir.

B6 - BRAKE OIL LEVEL

CHECK

Park the telescopic handler on level ground.

- Loosen screw (1) (fig. B6/1) and remove the access panel for the brake fluid reservoir and windshield washer tank (2) (fig. B6/1).
- The level is correct when it is at the MAX level on the reservoir.
- If necessary, add oil (see chapter: 6 - MAINTENANCE: LUBRICANTS AND FUEL) at the filler neck (3) (fig. B6/2).

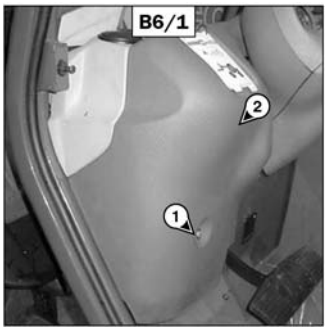

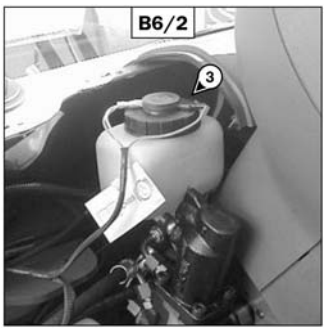

- Visually check that there is no leakage at the reservoir and connections.

B7 - WINDSHIELD WASHER FLUID LEVEL

CHECK

- Loosen screw (1) (fig. B7/1) and remove the access panel for brake fluid reservoir and windshield washer tank (2) (fig. B7/1).
- Visually check the level.
- If necessary, add windshield washer fluid (see chapter: 6 - MAINTENANCE: LUBRICANTS AND FUEL) at filler neck (3) (fig. B7/2).

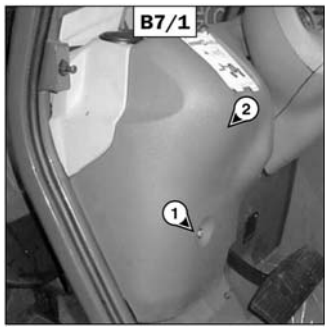

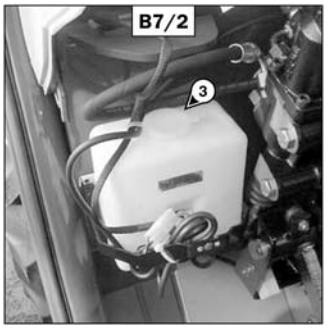

B8 - CAB DOOR

GREASE

Clean and lubricate the points (1) (four fittings) (fig. B8) with grease (see chapter: 6 - MAINTENANCE: LUBRICANTS AND FUEL). Remove any excess grease.

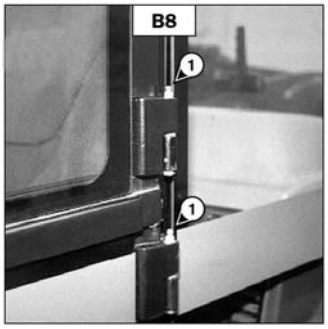

B9 - CAB VENTILATION FILTER

CLEAN

- Remove access cover (1) (fig. B9).
- Slide out cabin ventilation filter (2) (fig. B9).
- Clean the filter with a compressed air jet.
- Check its condition and change if necessary (see chapter: 5 - MAINTENANCE: FILTER CARTRIDGES AND BELTS).
- Re-install the filter and access cover.

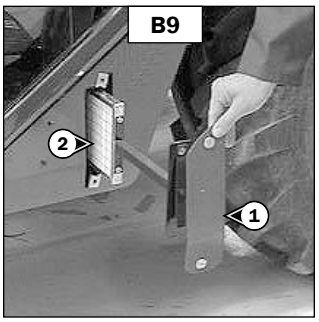

B10 - BATTERY ELECTROLYTE LEVEL

CHECK

Check the electrolyte level in each cell of the battery.

NOTE: *If the telescopic handler is working in a high temperature environment, check the level more frequently than every 50 hours of service.*

- Open the right side cover.
- Remove caps (1) (fig. B10) from each cell of the battery.
- The level is correct when it is 1/2” (13 mm) above the top of the plates in the battery.
- If necessary, top up the cells with clean distilled water that has been stored in a glass container.
- Clean and dry caps (1) (fig. B10) and replace and tighten.

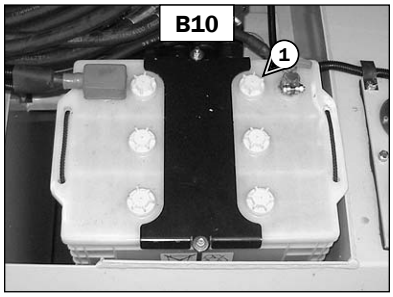

- Check the terminal connections and lightly coat them with petroleum jelly to prevent corrosion.

WARNING

Handling and servicing a battery can be hazarous. Take the following precautions:

- **Wear protective goggles.**
- **Keep the battery horizontal.**
- **Never smoke or work near an open flame.**
- **Work in a well-ventilated area.**
- **In the event of electrolyte being spilled onto the skin or splashed in the eyes, rinse thoroughly with cold water for 15 minutes and call a doctor.**

B11 - FRONT AND REAR AXLE SPINDLES

GREASE

Clean and lubricate the points (1) (eight fittings) (fig. B11) with grease (see chapter: 6 - MAINTENANCE: LUBRICANTS AND FUEL). Remove excess grease.

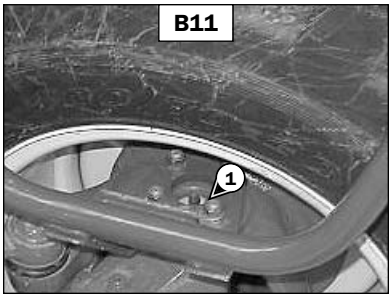

B12 - REAR AXLE OSCILLATION

GREASE

Clean and lubricate the points (1) (two fittings) (fig. B12) with grease (see chapter: 6 - MAINTENANCE: LUBRICANTS AND FUEL). Remove any excess grease.

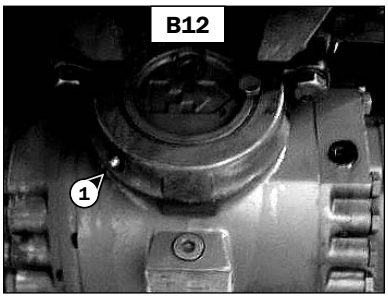

B13 - TRANSMISSION UNIVERSAL JOINT

GREASE

Clean and lubricate the following points with grease (see chapter: 6 - MAINTENANCE: LUBRICANTS AND FUEL). Remove any excess grease.

- Remove access panel (1) (fig. B13/1).

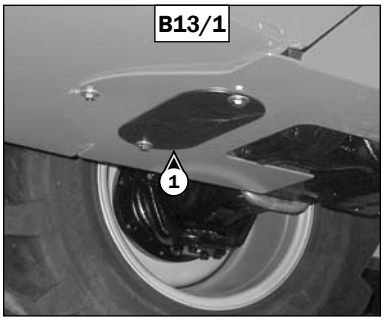

- Grease fittings for the universal joint between the transmission and the front axle (3) (fig. B13/2 and B13/3).

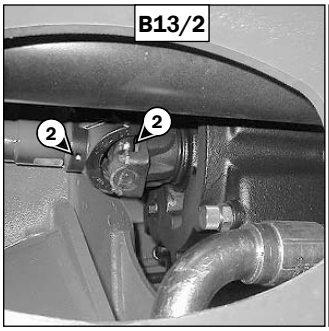

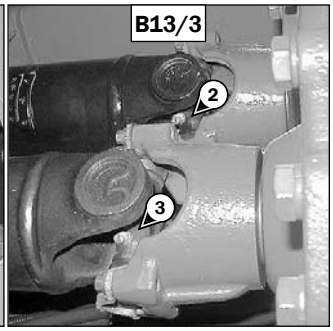

- Grease fittings for the universal joint between the front axle and the rear axle (3) (fig. B13/3 and B13/4).

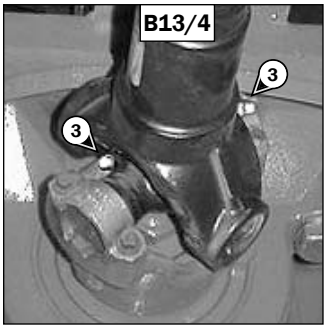

C - EVERY 250 HOURS OF SERVICE

Perform the operations described previously as well as the following operations:

C1 - FANBELT TENSION

CHECK - ADJUST

- Open the engine cover.
- Unscrew the fastening screws (1) (fig. C1/1).
- Remove the protective guard (2) (fig. C1/1).

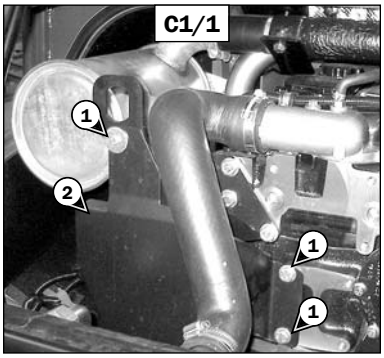

- Check the belt for signs of wear and cracks, and change if necessary (see chapter: 6 - MAINTENANCE: FILTER CARTRIDGES AND BELTS).
- Check the belt tension between the crankshaft pulley and the alternator pulley.
- Under a normal pressure exerted with the thumb 10 lbf. (45N), the tension should be approximately 3/8” (10 mm).
- Adjustment if necessary:
  a. Loosen screws (3) (fig. C1/2) by two to three turns.
  b. Pivot the alternator assembly to obtain the belt tension required.
  c. Retighten screws (3) (fig. C1/2) to a torque of 16 ft.-lbs. (22 Nm).
- Replace the protective guard (2) (fig. C1/1).

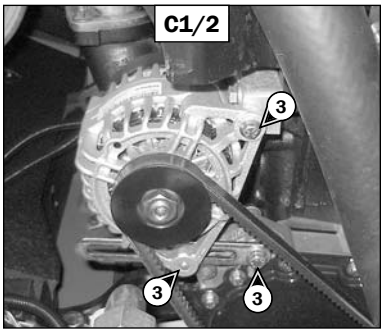

NOTE: *If the alternator belt is changed, check the tension again after 20 hours of operation.*

C2 - COMPRESSOR BELTS TENSION

CHECK - ADJUST

- Open the engine cover.
- Unscrew the fastening screws (1) (fig. C2/1).
- Remove the protective guard (2) (fig. C2/1).

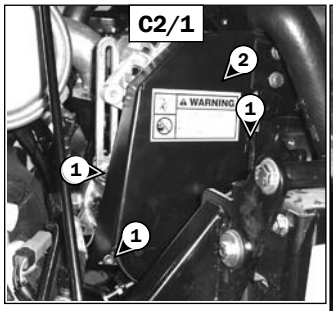

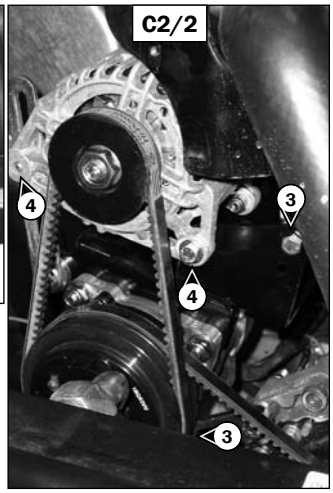

- Check the belts for signs of wear and cracks and change if necessary (see chapter: 3 - MAINTENANCE: FILTERS CARTRIDGES AND BELTS).

FAN TO COMPRESSOR BELT

- Check the belt tension between the fan pulley and the compressor pulley.
- Under normal pressure exerted with the thumb of 10 lbf. (45N), the movement should be approximately 3/8” (10 mm).
- Adjustment if necessary:
  a. Loosen screws (3) (fig. C2/2) two to three turns.
  b. Pivot the compressor assembly to obtain the belt tension required.
  c. Retighten screws (3) (fig. C2/2).

COMPRESSOR TO ALTERNATOR BELT

- Check the belt tension between the compressor pulley and of the alternator pulley.
- Under normal pressure exerted with the thumb of 10 lbf. (45N), the movement should be approximately 3/8” (10 mm).
- Adjustment if necessary:
  a. Loosen screws (4) (fig. C2/2) two to three turns.
  b. Pivot the alternator assembly to obtain the belt tension required.
  c. Retighten screws (4) (fig. C2/2).
- Replace the protective guard 2 (fig. C2/1).

NOTE: *If the compressor belt is changed, check the tension again after 20 hours of operation.*

C3 - TRANSFER BOX OIL LEVEL

CHECK

Park the telescopic handler on level ground with the engine stopped.

- Remove access panel (1) (fig. C3/1).

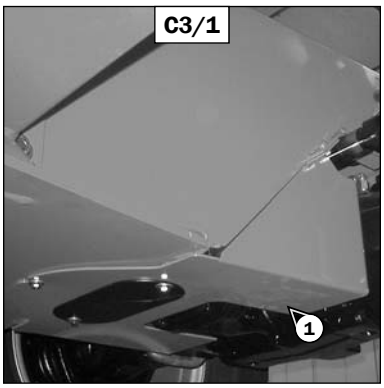

- Remove level plug (1) (fig. C3/2). The oil should be flush with the edge of the filler port.

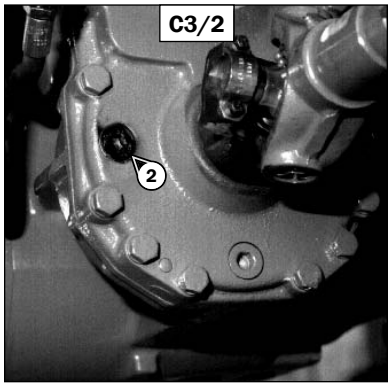

- If necessary, add oil (see chapter: 6 - MAINTENANCE: D11 - TRANSFER BOX OIL) by the same filler port.
- Replace and tighten the level plug (1) (fig. C3/2) 25 to 36 ft.-lb. (34 to 49 Nm) tightening torque.

C4 - PARKING BRAKE

CHECK - ADJUST

Park the telescopic handler on a slope of less than 15% with the rated load in the transport position.

- Check the tightening adjustment by applying the parking brake in position A (fig. C4/1).
- The adjustment is correct if the telescopic handler is held stationary on a slope.
- Adjust if necessary.

ADJUSTMENT OF THE PARKING BRAKE CABLE ON THE FRONT AXLE

- Press and release the brake pedal, then release the parking brake, by putting it in position B (fig. C4/1).

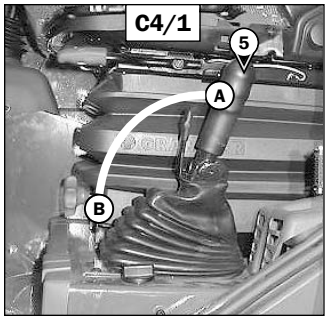

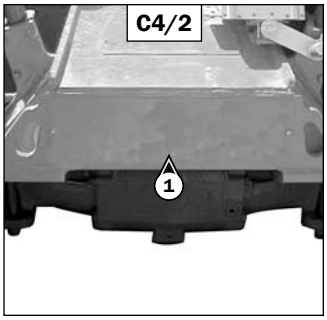

- Remove the cover plate (1) (fig. C4/2).
- Unscrew nuts (2) (fig. C4/3).
- Adjust the cable by loosening nuts (2) (fig. C4/3), until a clearance of 1/16” (1.5 mm) between cams (3) (fig. C4/3) and stops (4) (fig. C4/3) is obtained.

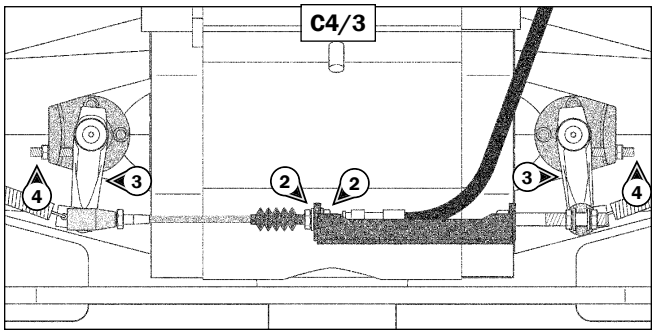

WARNING

The adjustment of the stops performed by the manufacturer must not be modified under any circumstances.

ADJUSTMENT OF THE PARKING BRAKE

- Leave the parking brake in position B (fig. C4/1).
- Progressively tighten the end piece of the lever (5) (fig. C3/1) and recheck braking.
- Repeat the operation until the correct braking adjustment is obtained.

C5 - CAB VENTILATION FILTER

CHANGE

- Remove access cover (1) (fig. C5).
- Slide out cab ventilation filter (2) (fig. C5) and replace with new filter (see chapter: 6 - MAINTENANCE: FILTER CARTRIDGES AND BELTS).

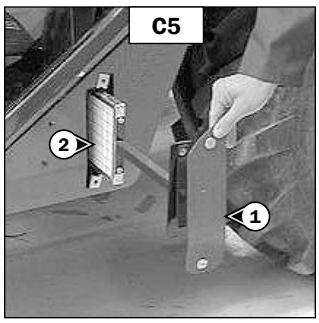

- Re-install the filter and access cover.

C6 - FRONT AND REAR AXLE DIFFERENTIAL OIL LEVEL

CHECK

Park the telescopic handler on level ground with the engine stopped.

- Remove level plug (1) (fig. C6). The oil should be flush with the edge of the hole.
- If necessary, add oil (see chapter: 6 - MAINTENANCE: LUBRICANTS AND FUEL) at the filler port (2) (fig. C6).
- Replace and tighten the level plug (1) (fig. C6) [tightening torque: 25 to 36 lbs.-ft. (34 to 49 Nm)].

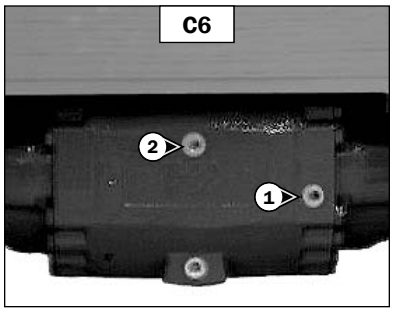

- Repeat this operation for both differentials.

C7 - FRONT AND REAR AXLE PLANETARIES OIL LEVEL

CHECK

Park the telescopic handler on level ground with the engine stopped.

- Check the level on both front axle planetaries.
- Place level plug (1) (fig. C7) in the horizontal position.
- Remove the level plug; the oil should be flush with the edge of the hole.
- If necessary, add oil (see chapter: 6 - MAINTENANCE: LUBRICANTS AND FUEL) through the same hole.
- Replace and tighten the level plug (1) (fig. C7) [tightening torque: 25 to 36 lbs.-ft. (34 to 49 Nm)].

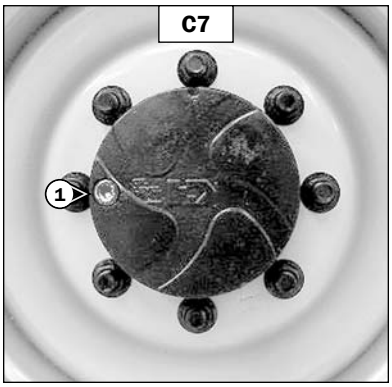

- Repeat the operation on both rear axle planetaries.

D - EVERY 500 HOURS SERVICE

Perform the operations described previously as well as the following operations:

D1 - ENGINE OIL

DRAIN

D2 - ENGINE OIL FILTER

CHANGE

Park the telescopic handler on level ground, let the engine run at idle for a few minutes, and then stop the engine.

DRAINING THE OIL

- Open the engine cover.
- Remove access panel (1) (fig. D1/1).
- Place a container under drain plug (2) (fig. D1/2) and unscrew the plug.

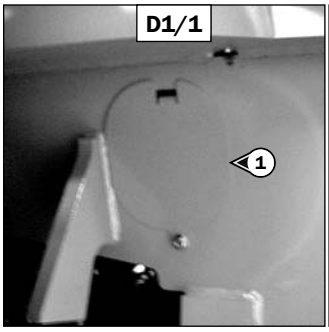

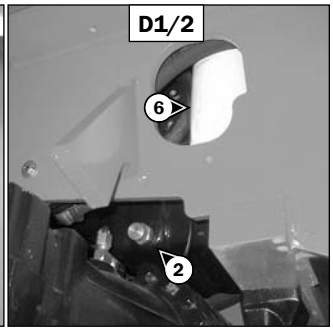

- Take drain hose (3) (fig. D1/3).
- Screw drain hose to the draining port (4) (fig. D1/4).

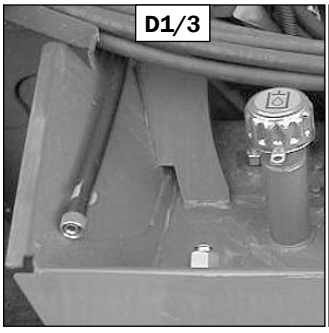

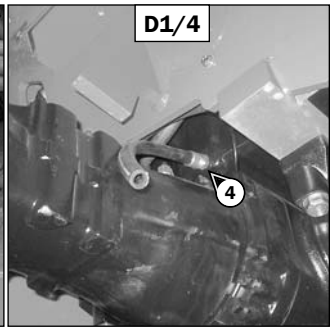

- Remove filler cap (5) (fig. D1/5) to ensure that the oil drains properly.

IMPORTANT: *Dispose of the drain oil in an ecological manner.*

REPLACING THE FILTER

- Remove engine oil filter (6) (fig. D1/2) ; discard the filter and the filter seal.
- Clean the filter mounting surface with a clean, lint-free cloth.
- Lightly grease the new oil filter seal and install the oil filter (see chapter: 6 - MAINTENANCE: FILTER CARTRIDGES AND BELTS).

IMPORTANT: *Tighten the oil filter by hand, and then secure the filter with a quarter turn more.*

REFILLING THE OIL

- Loosen, clean and replace the drain hose (3) (fig. D1/3).
- Replace and tighten drain plug (2) (fig. D1/2).
- Replace access panel (1) (fig. D1/1).
- Fill with oil (see chapter: 6 - MAINTENANCE: LUBRICANT AND FUEL) by filler port (7) (fig. D1/5).
- Wait a few minutes to allow the oil to flow into the crankcase.
- Start the engine and let it run for a few minutes.
- Check for possible leaks at the drain plug and the oil filter.
- Stop the engine, wait a few minutes and check that the level is at the upper mark on dipstick (8) (fig. D1/6).
- Top up if necessary.

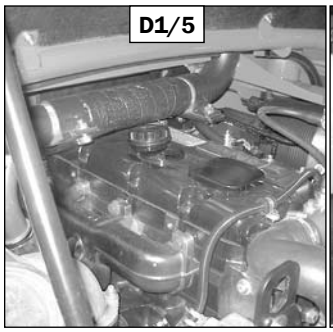

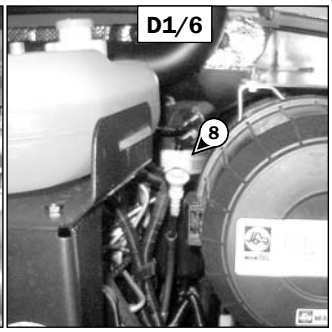

D3 - DRY AIR FILTER CARTRIDGE

CHANGE

In case of use in a very dusty conditions, the checking and cleaning period of the cartridge must be reduced to 250 hours.

IMPORTANT: *Change the cartridge in a clean location, with the engine stopped. Never run the engine with the air filter removed or damaged.*

- Open the engine cover.
- Loosen the clips and remove cover (1) (fig. D3).
- Gently remove the cartridge (2) (fig. D3), taking care to avoid spilling the dust.
- Leave the safety cartridge in place.

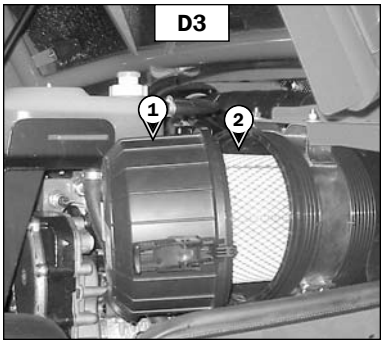

- The following parts must be cleaned with a damp, clean lint-free cloth.
  - The inside of the filter and cover.
  - The inside of the filter inlet hose.
  - The gasket surfaces on the filter and on the cover.
- Check pipes and connections between the air filter and the engine and the connection and condition of the filter indicator.
- Before installing, check the condition of the new cartridge (see chapter: 6 - MAINTENANCE: FILTER CARTRIDGES AND BELTS).
- Install the cartridge onto the filter axis and push it in, pressing the edges and not the middle.
- Reassemble the cover, with the dust valve downward.

D4 - FUEL FILTER CARTRIDGE

CHANGE

- Open the engine cover.
- Open battery cowl.

WARNING

Make sure the electrical system on the telescopic handler is disconnected, otherwise fuel will be released if the fuel pump is on.

- Carefully clean the outside of the filter and its holder, to prevent dust from getting into the fuel system.
- Place a container under the filter and drain it via drain plug (1) (fig. D4/1).
- Loosen the body of filter (2) (fig. D4/1).
- Remove the filter cartridge by pressing the cartridge (3) (fig. D4/2) down against the pressure of the spring and turn it to the left.
- Insert a new cartridge (see chapter: 6 - MAINTENANCE: FILTER CARTRIDGES AND BELTS), by pressing the cartridge (3) (fig. D4/2) down against the pressure of the spring and turning it to the right to lock it into the body of the filter.

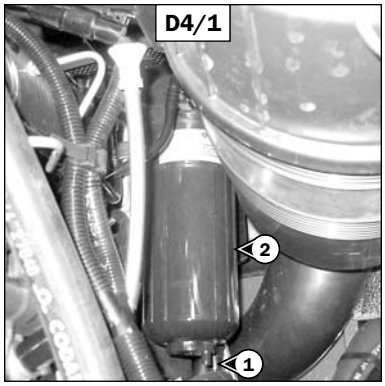

- Place the new seal (4) (fig. D4/2) onto the body of the filter and lubricate the contact surface using clean engine oil.

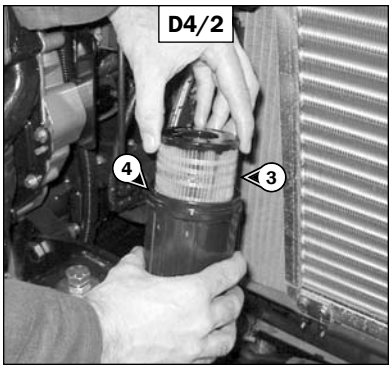

- Remount the body of the filter onto its holder. Hand-tighten it and then secure it with a quarter turn more.
- Close drain plug (1) (fig. D4/1) and remove the container.
- Before starting the engine, leave the ignition on for one minute, to give the fuel pump time to relieve air from the filter.
- Start the engine and make sure there is no leakage.
- If necessary, bleed the fuel circuit (see chapter: 6 - OCCASIONAL MAINTENANCE : G1 - FUEL SYSTEM).

D5 - TRANSMISSION OIL FILTER

CHANGE

- Remove the cover plate (1) (fig. D5/1).
- Remove and discard the transmission oil filter (2) (fig. D5/2).

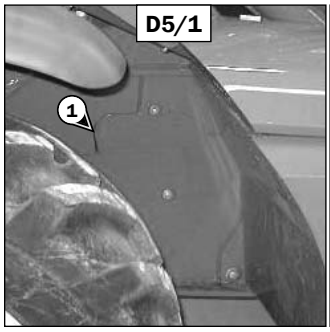

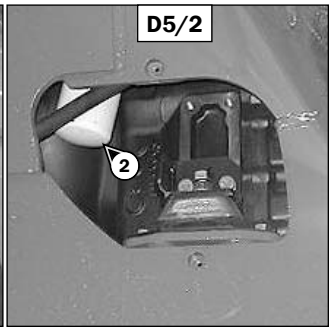

- Carefully clean the filter head with a clean, lint-free cloth.
- Slightly lubricate the new seal and fit the seal on the filter.
- Fill the new transmission oil filter (see chapter: 6 - MAINTENANCE: FILTER CARTRIDGES AND BELTS) with oil (see chapter: 6 - MAINTENANCE: LUBRICANTS AND FUEL).
- Install the filter, making sure that the seal is correctly positioned and tightened.

IMPORTANT: *Tighten the transmission oil filter by hand, and then secure the filter with a quarter turn more.*

- Replace the cover plate (1) (fig. D5/1).

D6 - HYDRAULIC RETURN OIL FILTER CARTRIDGE

CHANGE

Stop the engine and relieve the pressure from the circuits by cycling the hydraulic controls.

IMPORTANT: *Thoroughly clean the outside of the filter and its surroundings before servicing, to prevent contaminating the hydraulic system.*

- Open the right side cover.
- Unscrew the locking screws of the cover (1) (fig. D6).
- Remove the hydraulic return oil filter cartridge (2) (fig. D6), and install a new replacement cartridge (see chapter: 6 - MAINTENANCE: FILTER CARTRIDGES AND BELTS).
- Make sure the cartridge is correctly positioned and install the cover (1) (fig. D6).

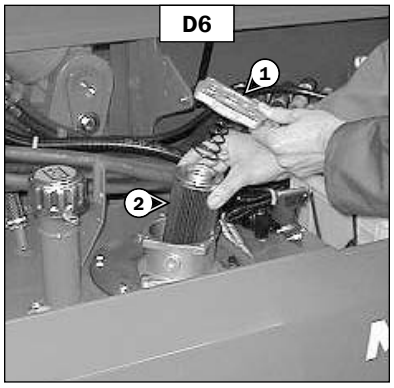

D7 - COUNTER-BALANCE VALVE

CHECK

To be performed after the first 50 hours of operation and then every 500 hours.

Park the telescopic handler on level ground, apply the parking brake and shift the transmission into neutral.

PURPOSE OF COUNTER-BALANCE VALVES

- The counter-balance valves protect the user from any risk due to a sudden drop in hydraulic pressure or failed hose.

WARNING

Keep everyone well away during these inspections.

In all cases, the counter-balance valve must be repaired or replaced if hydraulic movement continues after the engine has been turned off.

Never use the telescopic handler with a defective counter-balance valve.

TESTING EACH HYDRAULIC CIRCUIT

LIFTING CIRCUIT:

- Start the telescopic handler and raise the boom to about 45°.
- With the engine running at mid-speed, lower the boom. While the boom is lowering, turn off the engine. Movement should slow as the engine speed falls and stop when the engine stops.

TELESCOPING CIRCUIT:

- Start the telescopic handler and raise the boom as far as it will go, and extend the telescopic section completely.
- With the engine running at mid-speed, retract the boom. When retracting the boom, turn off the engine. Movement should slow as the engine speed falls and stop when the engine stops.

TILT CIRCUIT:

- Place a nominal load on the forks, and anchor it securely to prevent it from falling off during the test.
- Start the telescopic handler and tilt the carriage rearward, lifting the boom sufficiently to allow the carriage to tilt.
- With the engine running at mid-speed, tilt the carriage forward. While it is tilting, turn off the engine. Movement should slow down as the engine speed falls and stop when the engine stops.

D8 - PARKING BRAKE LEVER MECHANISM

GREASE

- Clean and lubricate pivot pins (1) (fig. D8) with oil (see chapter: 6 - MAINTENANCE: LUBRICANTS AND FUEL).

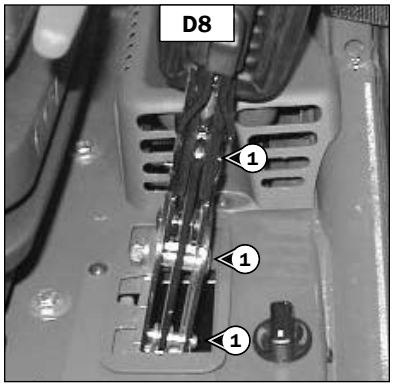

D9 - BATTERY ELECTROLYTE DENSITY

CHECK

The electrolyte density varies depending on the temperature, but a minimum specific gravity of 1.260 at 60°F (16°C) must be maintained. In the shaded area (fig. D9), the battery is in a normal charged condition.

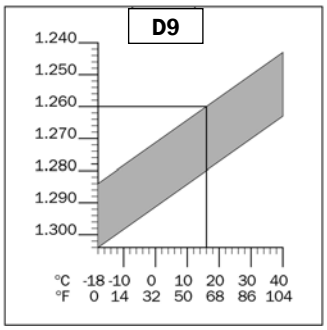

Readings above this zone indicate that the battery needs to be recharged.

- Check the electrolyte density in each battery cell using a hydrometer.

The density should not vary more than 0.025 units between cells.

- Do not perform this check immediately after topping up with distilled water. Recharge the battery for at least an hour before checking the battery electrolyte density.

⚠ WARNING

Handling and servicing a battery can be dangerous, take the following precautions :

- Wear protective goggles.

- Keep the battery horizontal.

- Never smoke or work near a open flame.

- Work in a well-ventilated area.

- In the event of electrolyte being spilled onto the skin or splashed in the eyes, rinse thoroughly with cold water for 15 minutes and call a doctor.

D10 - TRANSFER BOX OIL

DRAIN

Park the telescopic handler on level ground with the engine stopped and the transfer box oil still warm.

IMPORTANT: *Dispose of the drain oil in an ecological manner.*

- Remove access panel (1) (fig. D10/1).

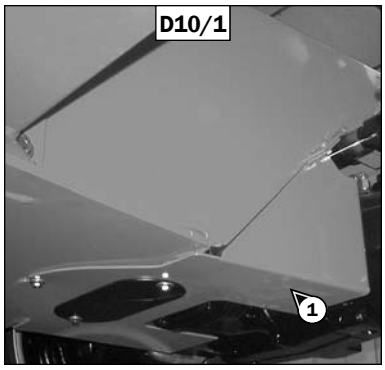

- Place a container under drain plug (2) (fig. D10/2) and remove the plug.
- Remove level and filler plug (3) (fig. D10/2) in order to ensure the oil is drained properly.
- Replace and tighten the drain plug (2) (fig. D10/2) [tightening torque: 25 to 36 ft.-lbs. (34 to 49 Nm)].

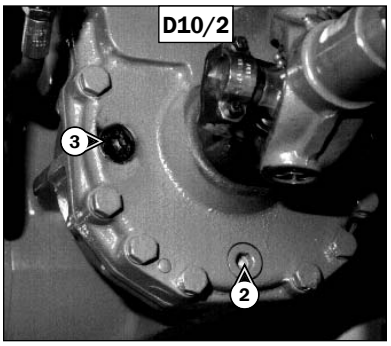

- Fill with oil (see chapter: 6 - MAINTENANCE: LUBRICANTS AND FUEL) by filler port 3 (fig. D10/2).
- The level is correct when the oil is flush with the edge of the level hole (3) (fig. D10/2).
- Check for any possible leaks at the drain plug.
- Replace and tighten the filler plug (2) (fig. D10/2) [tightening torque: 25 to 36 ft.-lbs. (34 to 49 Nm)].
- Replace the access panel (1) (fig. D10/1).

D11 - FRONT AND REAR AXLE DIFFERENTIAL OIL

DRAIN

Park the telescopic handler on level ground with the engine stopped and the differential oil still warm.

IMPORTANT: *Dispose of the drain oil in an ecological manner.*

- Place a container under the drain plugs (1) (fig. D11) and unscrew the plugs.
- Remove level plug (2) (fig. D11) and filler plug 3 (fig. D11) to ensure that the oil drains properly.
- Replace and tighten drain plugs (1) (fig. D11) [tightening torque: 25 to 36 ft.-lbs. (34 to 49 Nm)].
- Fill with oil (see chapter: 6 - MAINTENANCE: LUBRICANTS AND FUEL) at filler port (3) (fig. D11).
- The level is correct when the oil level is flush with the edge of port (2) (fig. D11).

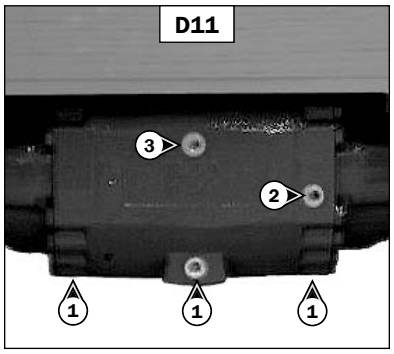

- Check for any leaks at the drain plugs.
- Replace and tighten level plug (2) (fig. D11) [tightening torque: 25 to 36 ft.-lbs. (34 to 49 Nm)] and filler plug (3) (fig. D11) [tightening torque: 25 to 36 ft.-lbs. (34 to 49 Nm)].
- Repeat this operation for the rear axle differential.

E - EVERY 1000 HOURS OF SERVICE

Perform the operations described previously as well as the following operations:

E1 - FUEL TANK

CLEAN

WARNING

While carrying out these operations, do not smoke or work near an open flame.

Park the telescopic handler on level ground with the engine stopped.

- Inspect the fuel system and tank for leaks.
- In the event of a leak, contact your dealer.

WARNING

Never weld while alone, because welding can cause an explosion or a fire.

- Place a container under drain plug (1) (fig. E1/1) and unscrew the plug.
- Open the right side cover.
- Remove cap (2) (fig. E1/2).
- When fuel tank is drained, rinse with 2-1/2 gallons (10 litres) of clean fuel at filler port (3) (fig. E1/2).
- Replace and tighten drain plug 1 (fig. E1/1) [tightening torque: 21 to 29 ft.-lbs. (29 to 39 Nm)].
- Fill the fuel tank with clean fuel (see chapter: 6 - MAINTENANCE: LUBRICANTS AND FUEL) filtered through a strainer or a clean, lint-free cloth and replace the filler plug (2) (fig. E1/2).

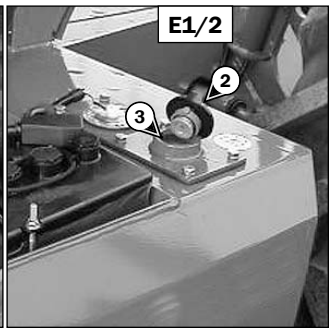

E2 - SAFETY DRY AIR FILTER CARTRIDGE

CHANGE

- For the disassembly and reassembly of the cartridge, see chapter: 6 - MAINTENANCE: D3 - AIR FILTER CARTRIDGE.
  - Gently remove the air filter safety cartridge (1) (fig. E2), taking care to avoid spilling the dust.

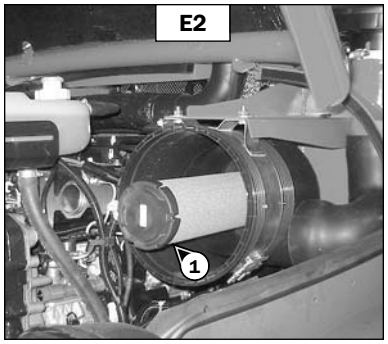

  - Clean the gasket surface on the filter with a damp, clean lint-free cloth.
  - Before mounting, check the condition of the new safety cartridge (see chapter: 6 - MAIN TENANCE: FILTERS CARTRIDGES AND BELTS).
  - Install the cartridge onto the filter axis and push it in, pressing the edges and not the mid dle.

NOTE: *The period for changing the safety cartridge is given for information only. The safety cartridge must be changed after every two changes of the air filter cartridge.*

E3 - TRANSMISSION OIL

DRAIN

Park the telescopic handler on level ground with the engine stopped and the transmission oil still warm.

DRAINING THE OIL

- Place a container under drain plug (1) (fig. E3/1) and under cover (2) (fig. E3/2) and unscrew the drain plug.
- Open the right side cover.
- Take drain hose (3) (fig. E3/3) and screw to the union on drain port (4) (fig. E3/4).
- Remove cover plate (5) (fig. E3/5).
- Remove dipstick (6) (fig. E3/6) and unscrew filling plug (7) (fig. E3/6) to ensure that the oil is drains properly.

IMPORTANT: *Dispose of the drain oil in an ecological manner.*

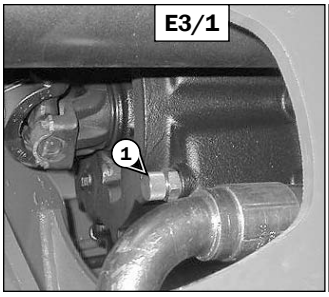

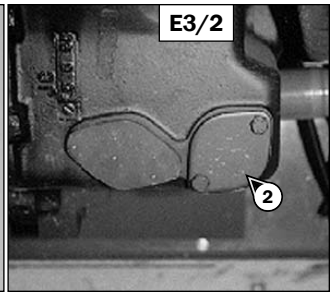

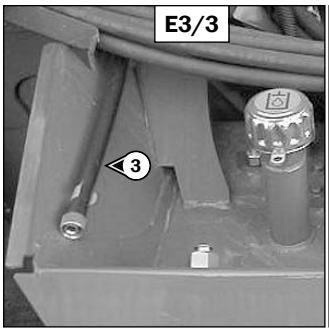

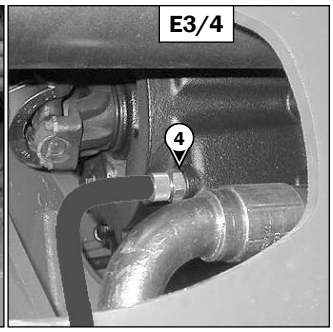

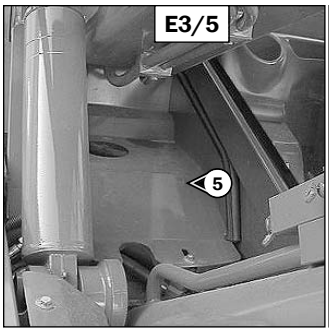

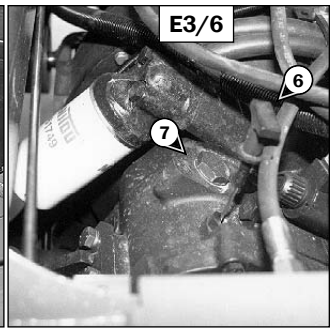

E4 - TRANSMISSION HOUSING STRAINER

CLEAN

CLEANING THE STRAINER

- Remove, clean and put back in place the drain hose (4) (fig. E3/4).
- Remove cover (2) (fig. E2/2) and set aside the o-ring joint and sealing washer.
- Allow the rest of the oil to drain.
- Remove and clean the strainer using a compressed air jet.
- Clean the magnetic section on the plate.
- Replace the assembly and tighten plate (2) (fig. E3/2) [tightening torque: 13 to 23 ft.-lbs. (18 to 31 Nm)].

REFILLING THE OIL

- Replace and tighten drain plug (1) (fig. E3/1) [tightening torque: 25 to 40 ft.-lbs. (34 to 54 Nm)].
- Fill with oil (see chapter: 6 - MAINTENANCE: LUBRICANTS AND FUEL) at filler port (7) (fig. E3/4) and replace the plug.
- Start the engine and let it run for a few minutes.
- Check for leaks from the drain plug and cover.
- Stop the engine, and within five minutes of the engine being stopped, check on the dipstick (6) (fig. E3/4) for the correct level between the MIN and MAX marks.
- Top up if necessary.
- Replace the cover plate (5) (fig. E3/5).

E5 - HYDRAULIC OIL

DRAIN

Park the telescopic handler on level ground with the engine stopped and telescopic boom retracted and lowered as far as possible.

IMPORTANT: *Before servicing, thoroughly clean the area surrounding the drain plugs and the suction cover on the hydraulic tank.*

DRAINING THE OIL

- Place a container under drain plug (1) (fig. E5/1) and unscrew the plug.
- Open the right side cover.
- Remove filler cap (2) (fig. E5/2) to ensure that the oil drains properly.

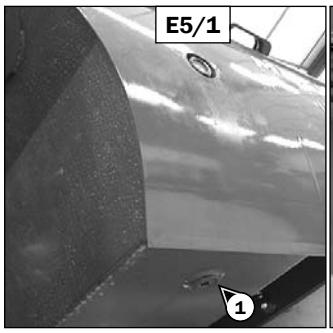

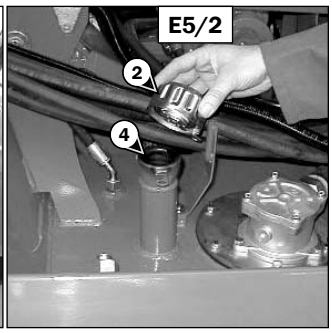

E6 - SUCTION STRAINER FOR HYDRAULIC OIL TANK

CLEAN

CLEANING THE STRAINER

- Remove the inspection panel (3) (fig. E5/3).
- Remove and clean the strainer using a compressed air jet. Check its condition and replace if necessary (see chapter: 6 - MAINTENANCE: FILTER CARTRIDGES AND BELTS).
- Replace the strainer and tighten the suction strainer cover (3) (fig. E5/3) [tightening torque: 60 ft.-lbs. (81 Nm)] making sure the seal is in the correct position.

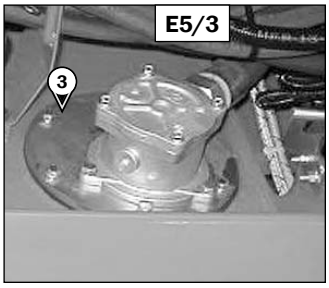

E7 - FILTER CAP FOR HYDRAULIC OIL RESERVOIR

CHANGE

FILLING THE OIL RESERVOIR

- Clean and reinstall the drain plug (1) (fig. E5/1) [tightening torque: 21 to 29 ft.-lbs. (29 to 39 Nm)].
- Fill with oil (see chapter: 6 - MAINTENANCE: LUBRICANTS AND FUEL) at filler port 4 (fig. E5/2).
- Observe the oil level on the site gauge (5) (fig. E5/4); the oil level should be at the level of the center point of the site gauge.

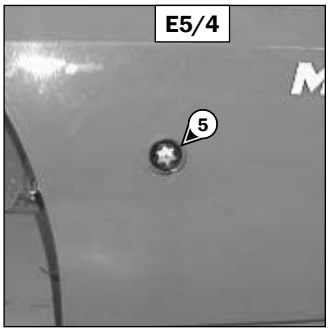

E5/4

- Check for any possible leaks at the drain plug.
- Replace filler plug (2) (fig. E5/2) with a new filler plug (see chapter: 6 - MAINTENANCE: FILTER CARTRIDGES AND BELTS).
- Close the right side cover.

FILTERING OF THE HYDRAULIC CIRCUIT

- Let the engine run (accelerator pedal at half throttle) for five minutes without using any hydraulic functions on the telescopic handler. Then run the engine for five more minutes while using all hydraulic functions (except the steering system).
- Accelerate the engine at full speed for one minute, then operate the steering system.
- This operation makes filtering of the hydraulic circuit possible through the hydraulic return oil filter.

E8 - SEAT BELT

CHECK

SEAT BELT WITH TWO ANCHORING POINTS

- Check the following points:
  - Tightness of the anchor points on the seat
  - Cleanliness of the belt and the locking mechanism
  - Actuation of the locking mechanism
  - Condition of the belt (cuts, curled edges)

RETRACTABLE SEAT BELT WITH TWO ANCHOR POINTS

- The correct retracting of the belt
- Condition of the reel guards
- Roller locking mechanism when the belt is given a sharp pull

IMPORTANT: *After an accident that involved stressing the seat belt, replace the seat belt.*

WARNING

Under no circumstances should the telescopic handler be used if the seat belt is faulty (not latching, has cuts or tears, etc.). Repair or replace the seat belt immediately.

E9 - FRONT AND REAR AXLE PLANETARIES OIL

DRAIN

Park the telescopic handler on level ground with the engine stopped and the planetaries still warm.

IMPORTANT: *Dispose of the drain oil in an ecological manner.*

- Drain and change both front axle plantaries:
  - Place drain plug (1) (fig. E9) in position A.
  - Place a container under the drain plug and unscrew the plug.
  - Let the oil drain fully.
  - Place the drain port in position B, i.e., in a level position.
  - Fill with oil (see chapter: 6 - MAINTENANCE: LUBRICANTS AND FUEL) by level port 1 (fig. E9).
  - The level is correct when the oil level is flush with the edge of the hole.
  - Reinstall and tighten the drain plug (1) (fig. E9) [tightening torque: 25 to 36 ft.-lbs. (34 to 49 Nm)].

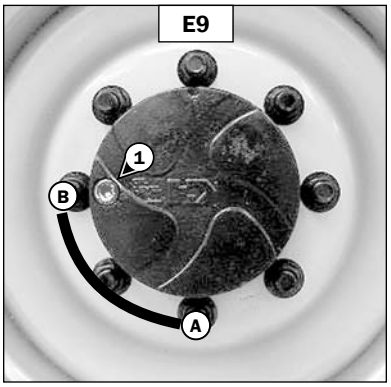

E9

  - Repeat this operation on both rear axle planetaries.

F - EVERY 2000 HOURS OF SERVICE

Perform the operations described previously as well as the following operations:

F1 - COOLANT

DRAIN

These operations are to be carried out as necessary, or every two years at the beginning of winter. Park the telescopic handler on level ground with the engine stopped and cold.

DRAINING THE COOLANT

- Open the engine cover.
- Remove the fixing rod (1) (fig. F1/1).
- Push forward the shroud (2) (fig. F1/2).

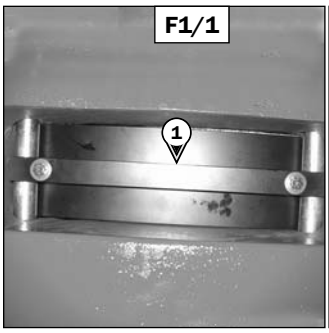

F1/1

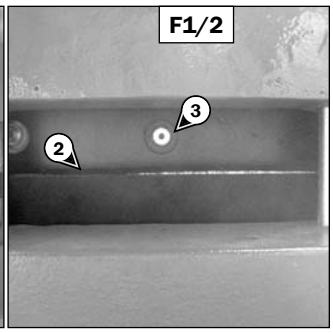

F1/2

- Place a container under drain plug (3) (fig. F1/2) of the radiator and drain plug (4) (fig. F1/3) of the engine block and unscrew the plugs.
- Remove filler cap (5) (fig. F1/4) of the expansion tank (6) (fig. F1/4).

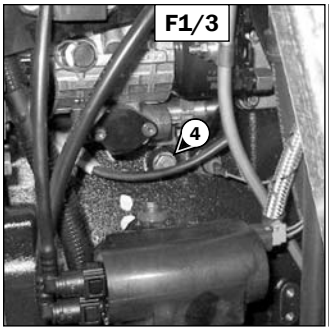

F1/3

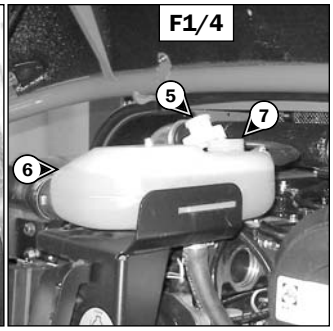

F1/4

- Let the coolant drain entirely while ensuring that the ports do not get clogged.
- Check the condition of the hoses as well as the clamping devices and change the hoses if necessary.
- Rinse the cooling system with clean water. Use a cleaning agent if necessary.

FILLING THE LIQUID

- Retighten drain plug (3) (fig. F1/2) 15 ft. lb.(20 Nm) torque and drain plug (4) (fig. F1/3) 30 ft. lb.(40 Nm) torque.
- Slowly fill up the cooling system with coolant (see chapter: 6 - MAINTENANCE: LUBRICANTS AND FUEL) to half way up the expansion tank 6 (fig. F1/4) through filler port (7) (fig. F1/4).
- Replace filler cap (4) (fig. F1/4).
- Replace the shroud (2) (fig. F1/2) with the fixing rod (1) (fig. F1/1).
- Run the engine at idle for a few minutes.
- Check for any leaks.
- Check the level and refill if necessary.

IMPORTANT: *The engine does not contain corrosion protection and must be filled during the entire year with a mixture containing 50% ethylene glycol-based antifreeze.*

G - PERIODIC MAINTENANCE

G1 - BLEEDING THE FUEL SYSTEM

These operations are necessary only in the following cases:

- A component of the fuel system is replaced
- A drained fuel tank
- Running out of fuel

Ensure that the fuel level in the tank is sufficient and bleed in the following order:

1. Open the engine cover.
2. Turn on the ignition for three minutes, to give the lift pump time to release air from the filter.
3. Switch off the ignition key.

IMPORTANT: *Do not engage the starter motor for more than 30 seconds. Let it cool between unsuccessful starting attempts.*

BLEEDING THE INJECTORS

- Remove the injectors cover (1) (fig. G6/1).
- Loosen the high pressure connectors (2) (fig. G6/2) of all the injectors.
- Activate the starter until the diesel fuel flows out free of air at the high pressure connectors (2) (fig. G6/2).

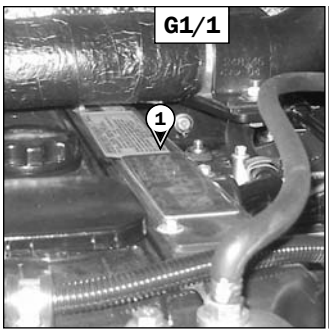

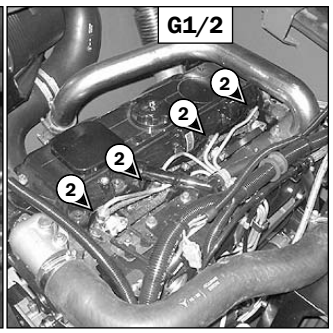

- Tighten the connections while the diesel fuel is flowing out [tightening torque: 22 ft.-lbs. (30 Nm)].
- The engine is then ready to be started.
- Run the engine slowly for five minutes immediately after bleeding the fuel system, to ensure that the injection pump has been bled thoroughly.

NOTE: *If the engine runs properly for a short time and then stops or runs irregularly, check for possible leaks in the low pressure circuit. If in doubt, contact your dealer.*

G2 - WHEEL

CHANGE

WARNING

In the event of a wheel being changed on a public highway, follow this procedure:

For this operation, use a hydraulic jack and a safety support.

- Stop the telescopic handler, if possible on even and hard ground. Apply the parking brake.
- To stop the telescopic handler (see chapter: 4 - OPERATING AND SAFETY INSTRUCTIONS: G - STOPPING THE TELESCOPIC HANDLER).
- Switch on the hazard warning lights.
- Block the telescopic handler in both directions on the wheel opposite to the wheel to be changed.
- Break loose the nuts of the wheel to be changed.
- Place the jack under the flared axle tube, as near as possible to the wheel and adjust the jack (fig. G1/1).
- Lift until the tire comes off the ground, and put the safety support in place under the axle (fig. G1/2).

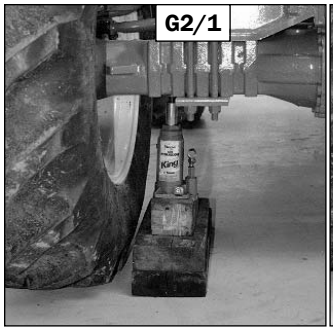

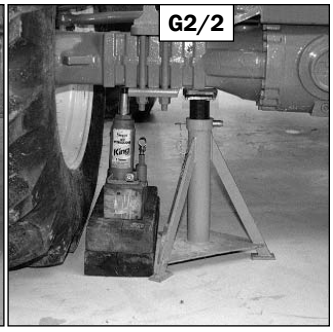

- Completely loosen and remove the wheel nuts.
- Remove the wheel and roll it to the side.
- Install the new wheel on the wheel hub.
- Replace the nuts by hand. If necessary, grease them.
- Remove the safety support and lower the telescopic handler with the jack.
- Tighten the wheel nuts with a torque wrench (see chapter: 6 - MAINTENANCE: A - DAILY OR EVERY 10 HOURS SERVICE for tightening torque).

G3 - ADJUSTING FRONT HEADLAMPS

ADJUST

RECOMMENDED SETTING

Set the dipped beam to -2% in relation to the horizontal line of the headlamp.

ADJUSTING PROCEDURE

- Park the telescopic handler unloaded and in the transport position and facing to a white wall on flat, level ground (fig. G3).
- Check the tire pressures (see chapter: 1 - SPECIFICATIONS: SPECIFICATIONS).
- Place the shift lever in neutral and apply the parking brake.

CALCULATING THE HEIGHT OF THE DIPPED BEAM (H2):

- h1 = Height of the headlamp in relation to the ground
- h2 = Height of the dipped beam
- l = Distance between the headlamp and the wall
- h2 = h1 - (l x 2/100)

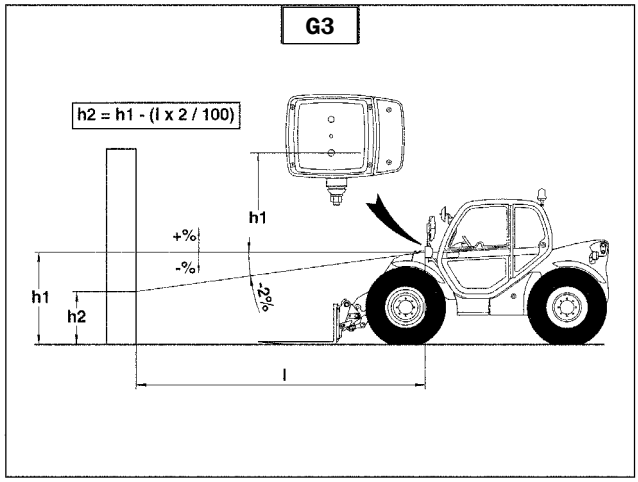

H - EVERY TWO YEARS

WARNING

Never try to repair the air conditioning system yourself. To recharge the circuit, always contact your dealer, who has the appropriate parts, technical training and necessary tools.

- Do not open the circuit under any circumstances, because this will cause the refrigerant to be lost.
- The air conditioning system contains a gas, which can be hazardous under certain conditions. This gas, refrigerant R134a, is colorless, odorless and heavier than air.

WARNING

• If refrigerant is inhaled, take those affected into fresh air, give them oxygen or artificial respiration if necessary and call a doctor.

• If refrigerant contacts the skin, wash immediately under running water and remove any contaminated garments.

• If refrigerant contacts the eyes, rinse in clear water for 15 minutes and call a doctor.

- The compressor has an oil level gauge; but never unscrew this gauge, because it would depressurize the installation. The oil level is only checked when changing the oil in the system.

H1 - CLEANING THE CONDENSER AND EVAPORATOR COILS (*)

H2 - CLEANING THE HOTWELL AND THE PRESSURE RELIEF VALVE (*)

H3 - COLLECTING THE REFRIGERANT TO REPLACE THE FILTER-DRIER (*)

H4 - RELOADING REFRIGERANT AND CHECKING THE THERMOSTATIC CONTROL AND PRESSURE SWITCHES (*)

NOTE: *When opening the evaporator unit, remember to replace the cover seal.*

(*): CONSULT YOUR DEALER.

Chapter 7

ATTACHMENTS

INTRODUCTION

- The telescopic handler can be used with interchangeable equipment, called attachments.
- A wide range of attachments, specially designed and suitable for the telescopic handler is available and approved by GEHL.
- Attachments are delivered with a load chart applicable to the telescopic handler. The operator's manual and the load chart should be kept in the place provided in the telescopic handler. For standard attachments, their use is covered by the instructions contained in this manual.
- Some particular uses require an adaptation of the attachment, which is not provided in the listed options. Consult your dealer.

IMPORTANT: *Certain attachments may, when the boom is lowered and retracted, come into contact with the front tires and cause damage to them, if the attachment is tilted forward. TO AVOID THIS RISK, EXTEND THE BOOM SO THAT SUCH CONTACT IS NOT POSSIBLE.*

WARNING

Only attachments approved by the manufacturer are to be used on GEHL telescopic handlers (see chapter: 7 - ATTACHMENTS: TECHNICAL SPECIFICATIONS OF ATTACHMENTS). The manufacturer's liability will be denied in case of modification or adaptation without the manufacturer's approval.

WARNING

Maximum loads are defined by the capacity of the telescopic handler, based on the attachment's mass and center-of-gravity. If an attachment has less capacity than the telescopic handler, never exceed the attachment's limit.

INSTALLING ATTACHMENTS

A - ATTACHMENT WITHOUT HYDRAULICS AND MANUAL LOCKING DEVICE

CT6-18

INSTALLING AN ATTACHMENT

- Ensure that the attachment is in a position for locking it to the carriage. If it is not correctly oriented, take the necessary precautions to safely position it.
- Check that the locking pin and the clip are in position in the bracket (fig. A).
- Park the telescopic handler with the boom lowered in front of and in line with the attachment. Tilt the carriage forwards (fig. B).

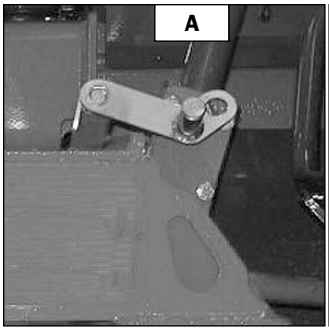

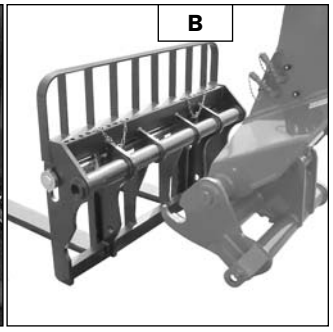

- Bring the carriage under the mounting tube of the attachment, slightly lift the boom, and tilt the carriage rearward to position the attachment (fig. C).
- Lift the attachment off the ground to ease locking.

MANUAL LOCKING

- Remove the locking pin and the clip from the bracket (fig. A) and lock on the attachment (fig. D). Do not forget to replace the clip.

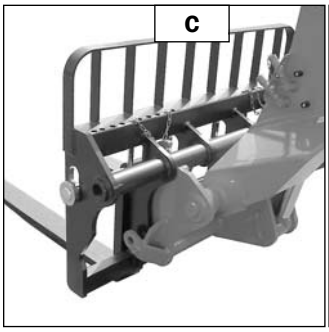

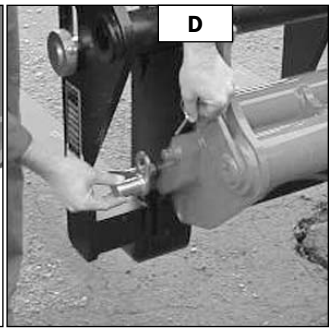

MANUAL RELEASING

- Proceed in the reverse order of paragraph MANUAL LOCKING. Be sure to reinstall the locking pin and the clip in the bracket (fig. A).

REMOVING AN ATTACHMENT

- Proceed in the reverse order of paragraph INSTALLING AN ATTACHMENT. Be sure to place the attachment flat on the ground and in a closed position.

B - ATTACHMENT WITHOUT HYDRAULICS AND WITH HYDRAULIC LOCKING DEVICE

CT6-18 TURBO

INSTALLING AN ATTACHMENT

- Ensure that the attachment is in a position for locking it to the carriage. If it is not correctly oriented, take the necessary precautions to safely position it.
- Check that the pins (1) on the locking cylinder are retracted (fig. A).
- Park the telescopic handler with the boom lowered in front of and in line with the attachment. Tilt the carriage forward (fig. B).

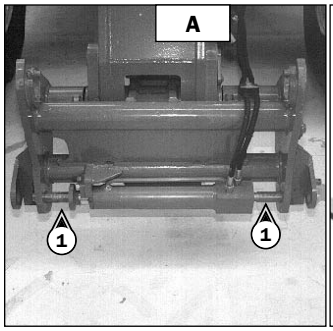

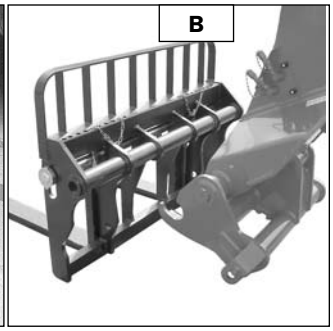

- Bring the carriage under the locking tube of the attachment, slightly lift the boom, and tilt the carriage rearward to position the attachment (fig. C).
- Lift the attachment off the ground to ease locking.

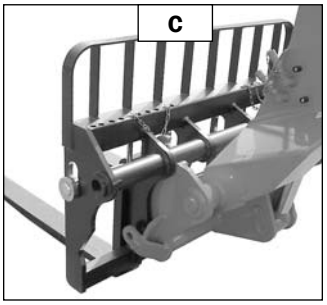

HYDRAULIC LOCKING

- Place the selector valve in position A (fig. D), with the hydraulic circuit for attachment locking “open.”
- Switch button (1) (fig. E) of the hydraulic control valve joystick up to lock the attachment on the carriage.
- Close the valve to position B (fig. D), with the hydraulic circuit for attachment locking “closed.”

WARNING

Always close the valve to position B (fig. D) after locking on the attachment, to avoid accidental unlocking, and to use the attachment safely.

HYDRAULIC RELEASING

- Place the valve in position A (fig. D), with the hydraulic circuit for attachment locking “open.”
- Switch button (1) (fig. E) of the hydraulic control valve joystick down to completely release the attachment.

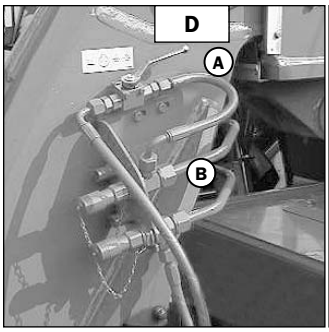

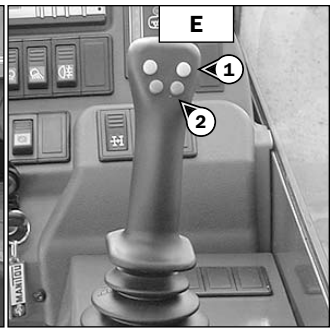

REMOVING AN ATTACHMENT

- Proceed in the reverse order of paragraph INSTALLING AN ATTACHMENT.
- Be sure to place the attachment flat on the ground and in a closed position.

C - ATTACHMENT WITHOUT HYDRAULICS AND WITH HYDRAULIC LOCKING DEVICE

CT6-18 Option

INSTALLING AN ATTACHMENT

- Ensure that the attachment is in a position for locking it to the carriage. If it is not correctly oriented, take the necessary precautions to safely position it.
- Check that the pins (1) on the locking cylinder are retracted (fig. A).
- Park the telescopic handler with the boom lowered in front of and in line with the attachment. Tilt the carriage forward (fig. B).

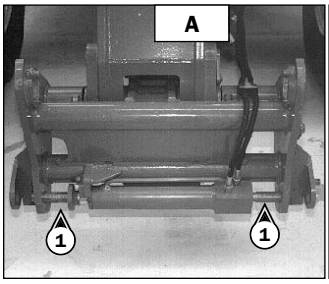

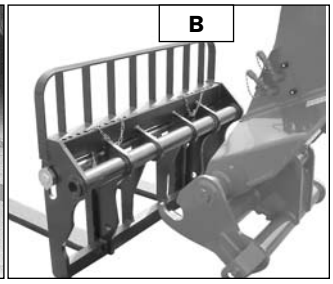

- Bring the carriage under the mounting tube of the attachment, slightly lift the boom, and tilt the carriage rearward to position the attachment (fig. C).

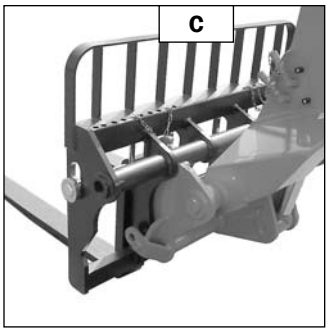

- Lift the attachment off the ground to ease locking.

HYDRAULIC LOCKING

- Place the selector valve in position A (fig. D), with the hydraulic circuit for attachment locked “open.”
- Move the hydraulic control valve joystick (1) (fig. E) forward to lock the attachment on the carriage.

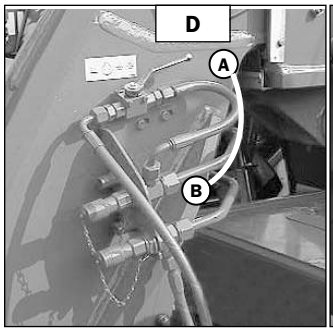

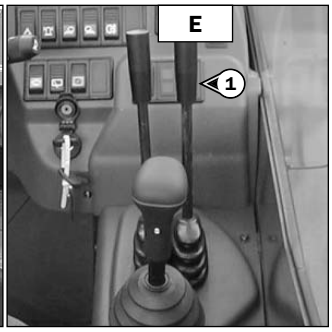

- Close the valve to position B (fig. D), with the hydraulic circuit for attachment locked “closed.”

WARNING

Always close the valve to position B (fig. D) after locking on the attachment, to avoid accidental unlocking, and to use the attachment safely.

HYDRAULIC RELEASING

- Place the valve in position A (fig. D), with the hydraulic circuit for attachment locking “open.”
- Move the hydraulic control valve lever (1) (fig. E) rearward to release the attachment.

REMOVING AN ATTACHMENT

- Proceed in the reverse order of paragraph INSTALLING AN ATTACHMENT.
- Be sure to place the attachment flat on the ground and in a closed position.

D - HYDRAULIC ATTACHMENT AND MANUAL LOCKING DEVICE

CT6-18

INSTALLING AN ATTACHMENT

- Ensure that the attachment is in a position for locking it to the carriage. If it is not correctly oriented, take the necessary precautions to safely position it.
- Check that the locking pin and the clip are in position in the bracket (fig. A).

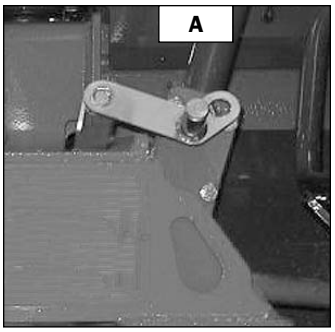

- Park the telescopic handler with the boom lowered in front of and in line with the attachment. Tilt the carriage forwards (fig. B).
- Bring the carriage under the mounting tube of the attachment, slightly lift the boom, and tilt the carriage rearward to position the attachment (fig. C).

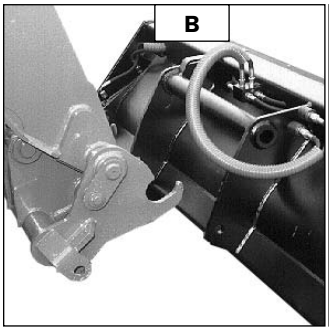

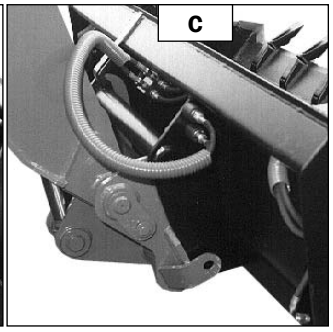

- Lift the attachment off the ground to ease locking.

MANUAL LOCKING AND CONNECTING THE ATTACHMENT

- Remove the locking pin and the clip from the bracket (fig. A) and lock on the attachment (fig. D). Do not forget to replace the clip.

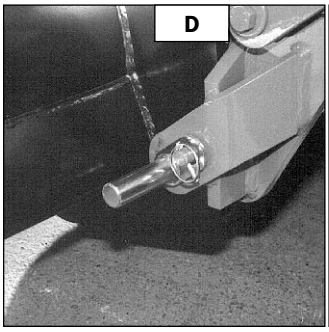

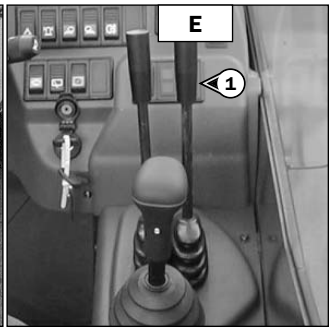

- Stop the engine.
- Relieve the pressure from the attachment hydraulic circuit by operating the hydraulic control lever (1)(fig. E) several times.
- Connect the quick-connectors as needed for the attachment's hydraulic movements.

IMPORTANT: *Make sure that the quick-connectors are clean, and protect the connections that are not used with the caps provided.*

MANUAL RELEASING AND DISCONNECTING THE ATTACHMENT

- Proceed in the reverse order of paragraph MANUAL LOCKING AND CONNECTING THE ATTACHMENT. Be sure to reinstall the locking pin and the clip in the bracket (fig. A).

REMOVING AN ATTACHMENT

- Proceed in the reverse order of paragraph INSTALLING AN ATTACHMENT. Be sure to place the attachment flat on the ground and in a closed position.

E - HYDRAULIC ATTACHMENT AND HYDRAULIC LOCKING DEVICE

CT6-18 Turbo

INSTALLING AN ATTACHMENT

- Ensure that the attachment is in a position for locking it to the carriage. If it is not correctly oriented, take the necessary precautions to safely position it.
- Check that the pins (1) on the locking cylinder are retracted (fig. A).
- Park the telescopic handler with the boom lowered in front of and in line with the attachment. Tilt the carriage forward (fig. B).

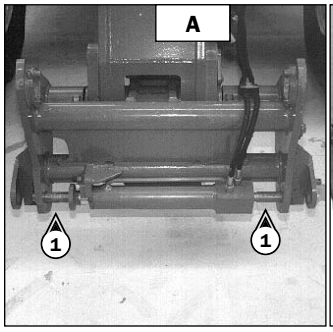

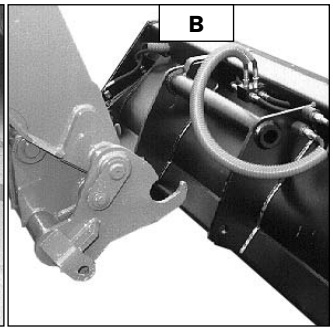

- Bring the carriage under the locking tube of the attachment, slightly lift the boom, and tilt the carriage rearward to position the attachment (fig. C).

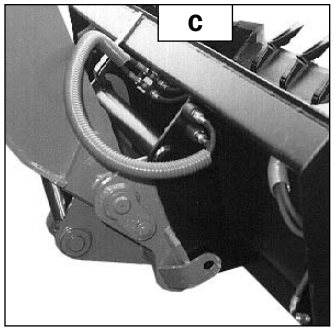

- Lift the attachment off the ground to ease locking.

HYDRAULIC LOCKING AND CONNECTING THE ATTACHMENT

- Place the selector valve in position A (fig. D), with the hydraulic circuit for the attachment locked open.
- Press button (1) (fig. E) on the hydraulic control valve joystick to lock the attachment on the carriage.
- Stop the engine, but keep the ignition "on."
- Relieve the pressure from the attachment hydraulic circuit by pressing buttons (1) and (2) (fig. E) on the hydraulic control valve joystick four or more times.

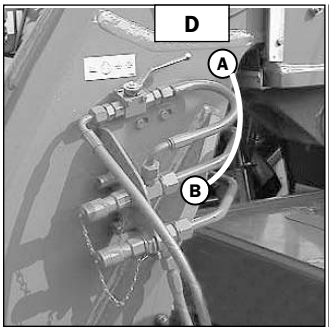

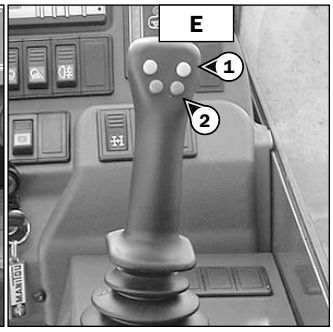

- Connect the quick-connectors as needed for the attachment's hydraulic movements.

IMPORTANT: *Make sure that the quick-connectors are clean, and protect the connections that are not used with the caps provided.*

- Close the selector valve in position B (fig. D), with the hydraulic circuit for the attachment locking "closed."

⚠ WARNING

Always close the valve to position B (fig. D) after locking on the attachment, to avoid accidental unlocking, and to use the attachment safely.

HYDRAULIC RELEASING AND DISCONNECTING THE ATTACHMENT

- Close the attachment.
- Place the selector valve in position A (fig. D), with the hydraulic circuit for the attachment locked "open."
- Press button (2) (fig. E) of the hydraulic control valve joystick down to release the attachment.
- Stop the engine, but keep the ignition "on."
- Relieve the pressure from the attachment hydraulic circuit by pressing buttons (1) and (2) (fig. E) on the hydraulic control valve joystick up and down four or more times.
- Disconnect the quick-connectors of the attachment.

IMPORTANT: *Make sure that the quick-connectors are clean, and protect the connections that are not used with the caps provided.*

REMOVING AN ATTACHMENT

- Proceed in the reverse order of paragraph INSTALLING AN ATTACHMENT.
- Be sure to place the attachment flat on the ground and in its closed position.

F - HYDRAULIC ATTACHMENT AND HYDRAULIC LOCKING DEVICE

CT6-18 Option

INSTALLING AN ATTACHMENT

- Ensure that the attachment is in a position for locking it to the carriage. If it is not correctly oriented, take the necessary precautions to safely position it.
- Check that the pins (1) on the locking cylinder are retracted (fig. A).
- Park the telescopic handler with the boom lowered in front of and in line with the attachment. Tilt the carriage forward (fig. B).

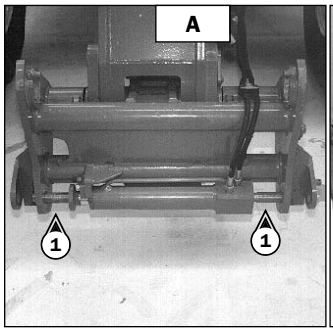

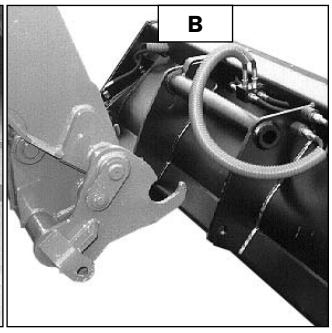

- Bring the carriage under the mounting tube of the attachment, slightly lift the boom, and tilt the carriage rearward to position the attachment (fig. C).

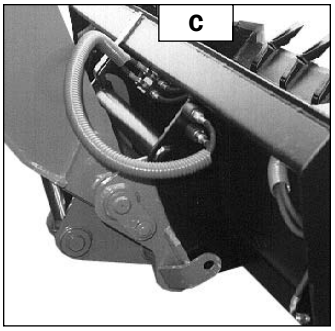

- Lift the attachment off the ground to ease locking.

HYDRAULIC LOCKING AND CONNECTING THE ATTACHMENT

- Place the selector valve in position A (fig. D), with the hydraulic circuit for the attachment locked open.
- Move the hydraulic control valve lever (1) (fig. E) forward to lock the attachment on the carriage.

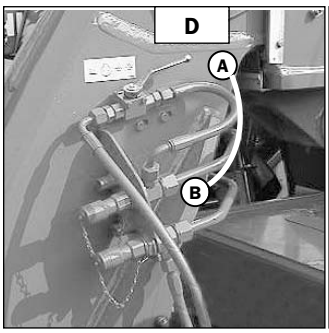

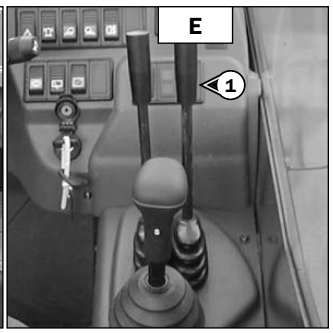

- Stop the engine.
- Relieve the pressure from the attachment hydraulic circuit by operating the hydraulic control valve lever (1) (fig.E) four or more times.
- Connect the quick-connectors as needed for the attachment's hydraulic movements.

IMPORTANT: *Make sure that the quick-connectors are clean, and protect the connections that are not used with the caps provided.*

- Close the selector valve in position B (fig. D), with the hydraulic circuit for the attachment locked "closed."

⚠ WARNING

Always close the valve to position B (fig. D) after locking on the attachment, to avoid accidental unlocking, and to use the attachment safely.

HYDRAULIC RELEASING AND DISCONNECTING THE ATTACHMENT

- Close the attachment.
- Place the selector valve in position A (fig. D), with the hydraulic circuit for the attachment locked "open."
- Move the hydraulic control valve lever (1) (fig. E) rearward to release the attachment.
- Stop the engine.
- Relieve the pressure from the attachment hydraulic circuit by operating the hydraulic control valve lever (1) (fig.E) four or more times.
- Disconnect the quick-connectors of the attachment.

IMPORTANT: *Make sure that the quick-connectors are clean, and protect the connections that are not used with the caps provided.*

REMOVING AN ATTACHMENT

- Proceed in the reverse order of paragraph INSTALLING AN ATTACHMENT.
- Be sure to place the attachment flat on the ground and in its closed position.

TECHNICAL SPECIFICATIONS OF ATTACHMENTS

MASONRY AND FRAMERS CARRIAGE

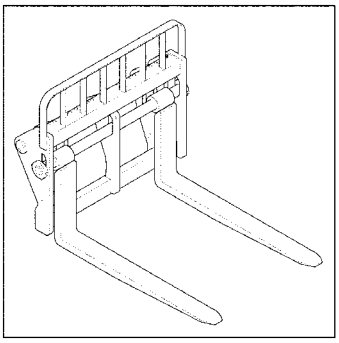

MASONRY	**REFERENCE:**	**820269**
	Nominal load capacity:	7,000 lbs.
	Width:	48”
	Weight:	541 lbs.
FRAMERS	**REFERENCE:**	**820270**
	Nominal load capacity:	7,000 lbs.
	Width:	60”
	Weight:	645 lbs.

MASONRY AND FRAMERS ROTATING CARRIAGE

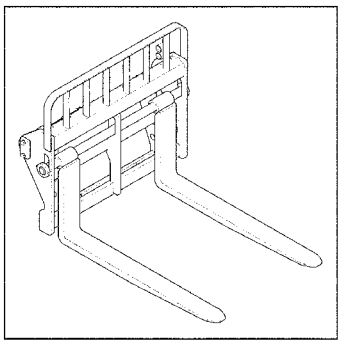

MASONRY	**REFERENCE:**	**820271**
	Nominal load capacity:	7,000 lbs.
	Width:	48”
	Weight:	820 lbs.
FRAMERS	**REFERENCE:**	**820272**
	Nominal load capacity:	7,000 lbs.
	Width:	60”
	Weight:	880 lbs.

FORK SETS

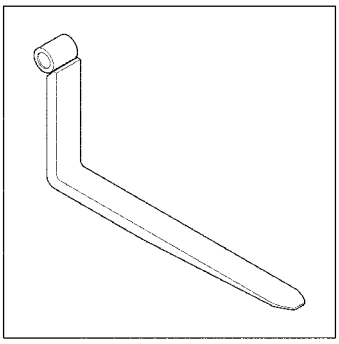

REFERENCE:	**804401**
Section:	5” x 1 3/4” x 48”
Weight:	325 lbs.
Rated Capacity:	7,500 lbs.
REFERENCE:	**860703**
Section:	4” x 2” x 48”
Weight:	295 lbs.
Rated Capacity:	7720 lbs.
REFERENCE:	**804602**
Section:	2” x 2” x 48”
Weight:	165 lbs.
Rated Capacity:	4,200 lbs. (requires two sets)
REFERENCE:	**847283**
Section:	5” x 2” x 60”
Weight:	390 lbs.
Rated Capacity:	10,500 lbs.

ITA HOOK-TYPE CARRIAGE WITH NO BACKREST

REFERENCE:	**820193**
Nominal load capacity:	10,000 lbs.
Width:	48”
Weight:	375 lbs.

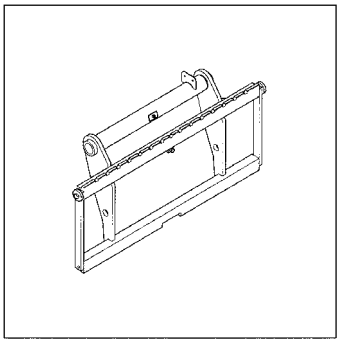

ITA HOOK-TYPE SIDE-SHIFT CARRIAGE WITH LOAD BACKREST

REFERENCE:	**820194**
Nominal load capacity:	10,000 lbs.
Side-shift:	2 x 4”
Width:	48”
Weight:	225 lbs.

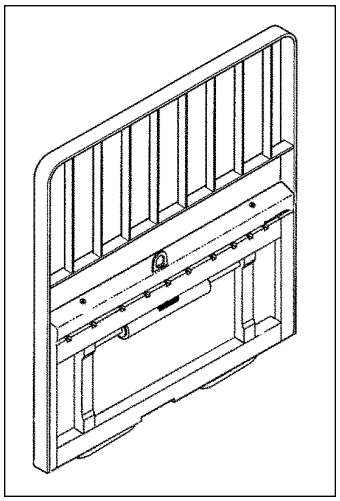

ITA HOOK-TYPE FORK SETS

REFERENCE:	**820195**
Section:	5” x 1 3/4” x 48”
Weight:	325 lbs.
Rated Capacity:	7,500 lbs.

REFERENCE:	**820196**
Section:	5” x 1 3/4” x 60”
Weight:	380 lbs.
Rated Capacity:	7,500 lbs.

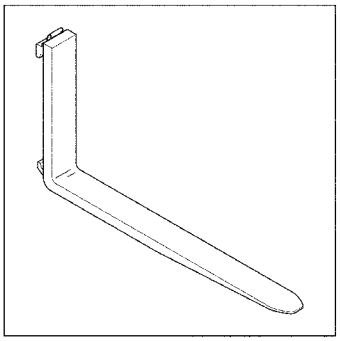

LIGHT MATERIAL BUCKET with OPTIONAL BOLT-ON CUTTING EDGE

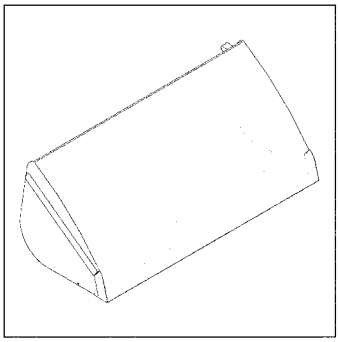

	REFERENCE:	**820277**
	Load capacity - heaped:	2.0 cu. yd.
	Width:	96”
	Weight:	1,155 lbs.
	REFERENCE:	**820256**
	Load capacity - heaped:	2.5 cu. yd.
	Width:	96”
	Weight:	1,290 lbs.
	REFERENCE:	**820278**
	Load capacity - heaped:	3.25 cu. yd.
	Width:	96”
	Weight:	1,480 lbs.
96” BOLT-ON CUTTING EDGE	**REFERENCE:**	**820259**
	Weight:	130 lbs.
	REFERENCE:	**820302**
	Load capacity - heaped:	2.5 cu. yd.
	Width:	84”
	Weight:	1,200 lbs.
84” BOLT-ON CUTTING EDGE	**REFERENCE:**	**820303**
	Weight:	115 lbs.

GENERAL PURPOSE BUCKET WITH BOLT-ON CUTTING EDGE

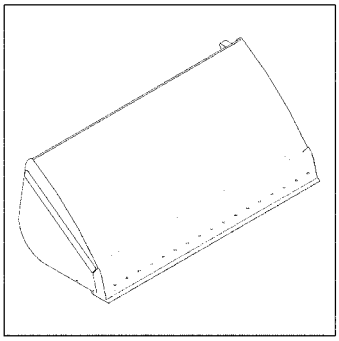

	REFERENCE:	**820258**
	Load capacity - heaped:	1.25 cu. yd.
	Width:	96”
	Weight:	925 lbs.
96” BOLT-ON CUTTING EDGE	**REFERENCE:**	**820259**
	Weight:	130 lbs.
	REFERENCE:	**820301**
	Load capacity - heaped:	1.50 cu. yd.
	Width:	84”
	Weight:	950 lbs.
84” BOLT-ON CUTTING EDGE	**REFERENCE:**	**820303**
	Weight:	115 lbs.

BUCKET WITH GRAPPLE

	REFERENCE:	**820257**
	Load capacity - heaped:	2.15 cu. yd.
	Width:	96”
	Weight:	2,210 lbs.
96” BOLT-ON CUTTING EDGE	**REFERENCE:**	**820259**
	Weight:	130 lbs.

HAY TOOLS

BALE CARRIAGE *(for two square bales)*	**REFERENCE:** Weight:	**820153** 940 lbs.	
BALE SPIKE *(for two round bales)*	**REFERENCE:** Weight:	**820152** 490 lbs.	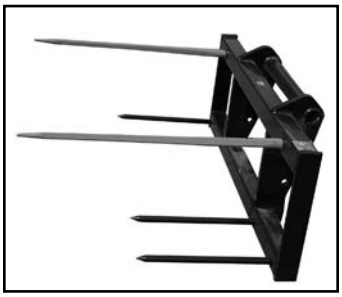
BALE GRAB *(for three square bales)*	**REFERENCE:** Weight:	**820154** 1,098 lbs.	

OTHER

UNIVERSAL SKID STEER ADAPTER *(with manual engagement and 1/2" flat face couplers)*	**REFERENCE:** Weight:	**820283** 285 lbs.
JIB BOOM, 12' LENGTH WITH HOOK	**REFERENCE:** Capacity: Weight:	**820202** 1,300 lbs. 350 lbs.

CT6-18 LOAD ZONE CHARTS

Standard Carriage Load Chart - 103608

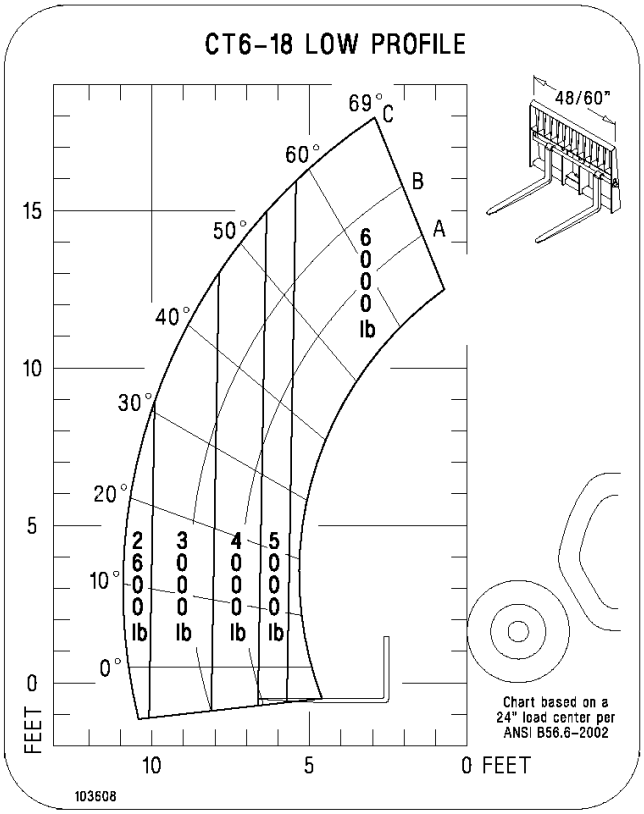

Rotating Carriage Load Chart - 103609

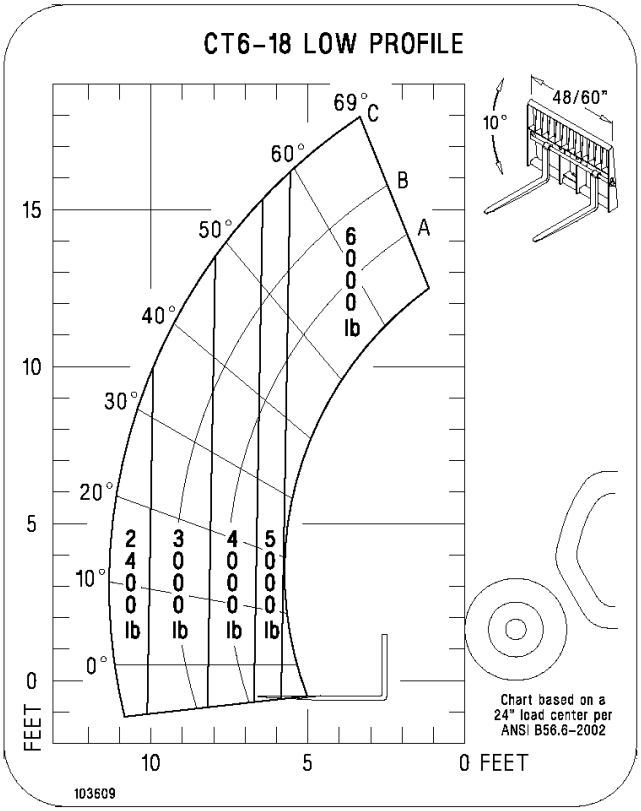

1.25 Cu. Yd. Bucket Load Chart - 103610

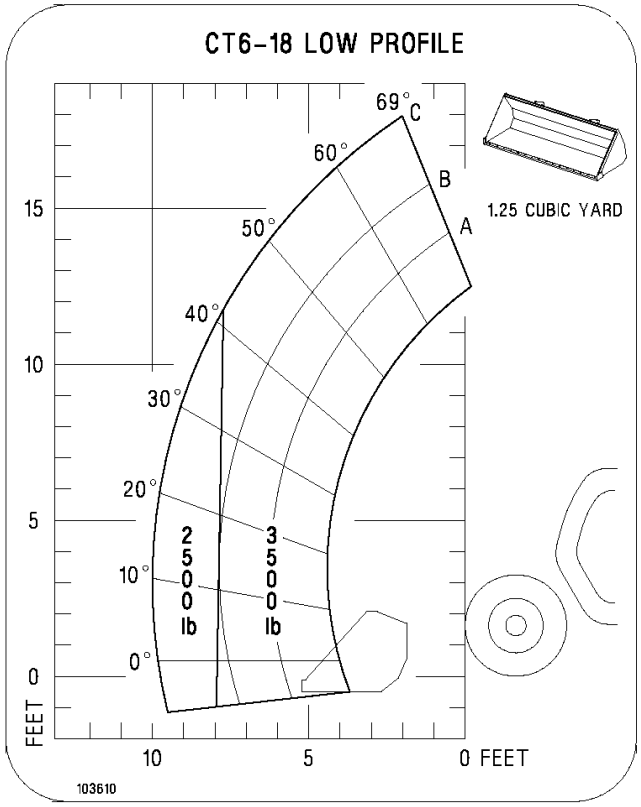

2.0/2.5 Cu. Yd. Bucket Load Chart - 103611

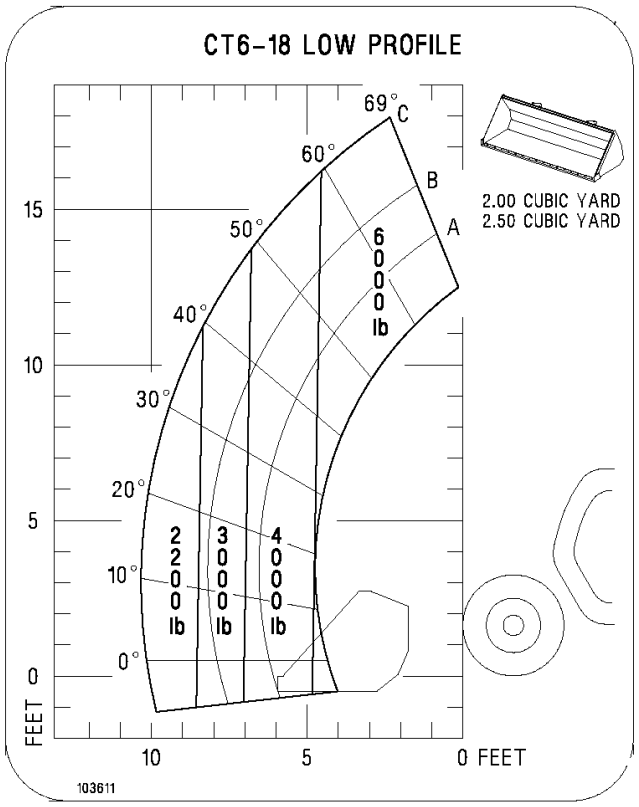

CT6-18 TURBO LOAD ZONE CHARTS

Standard Carriage Load Chart - 103613

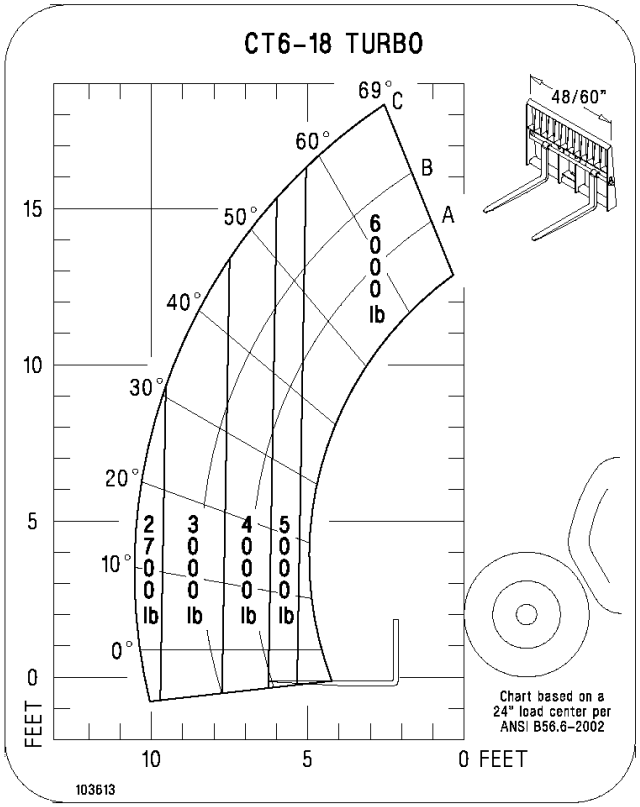

Rotating Carriage Load Chart - 103614

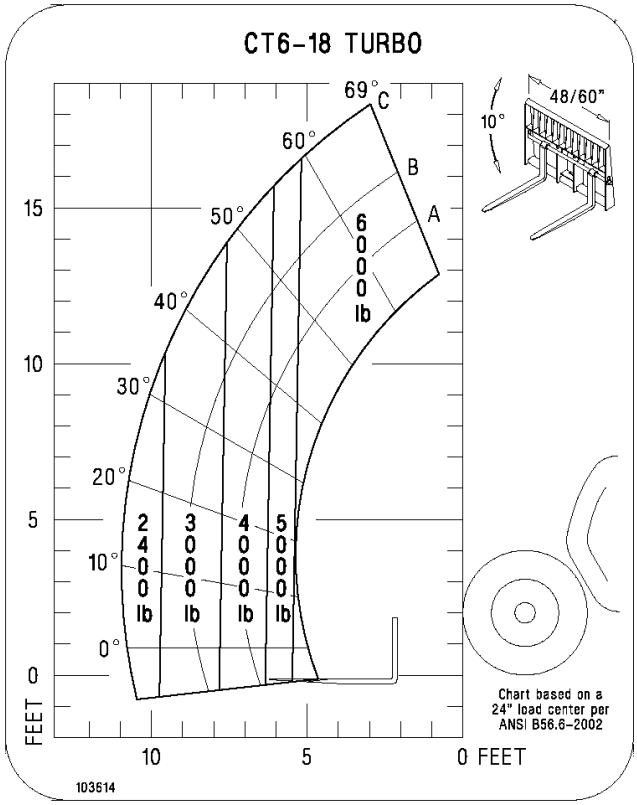

1.25 Cu. Yd. Bucket Load Chart - 103615

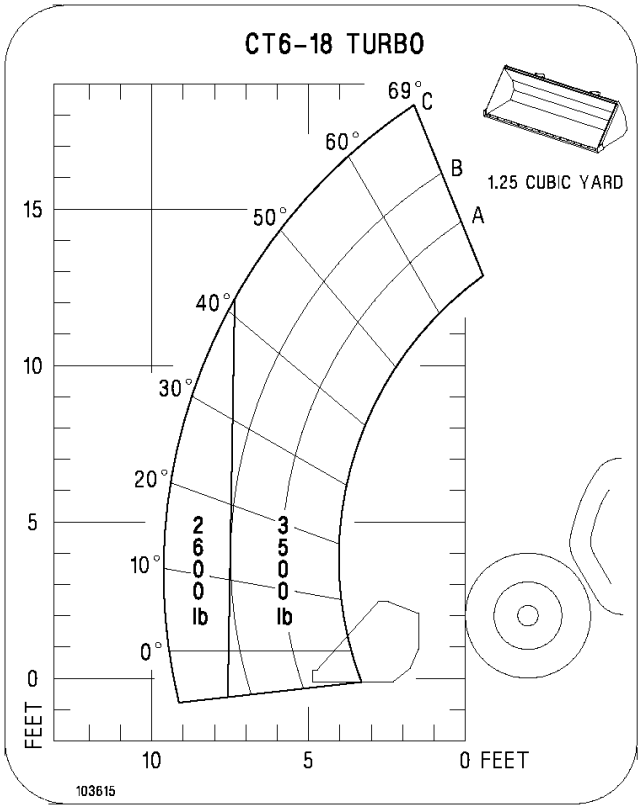

2.0/2.5 Cu. Yd. Bucket Load Chart - 103616

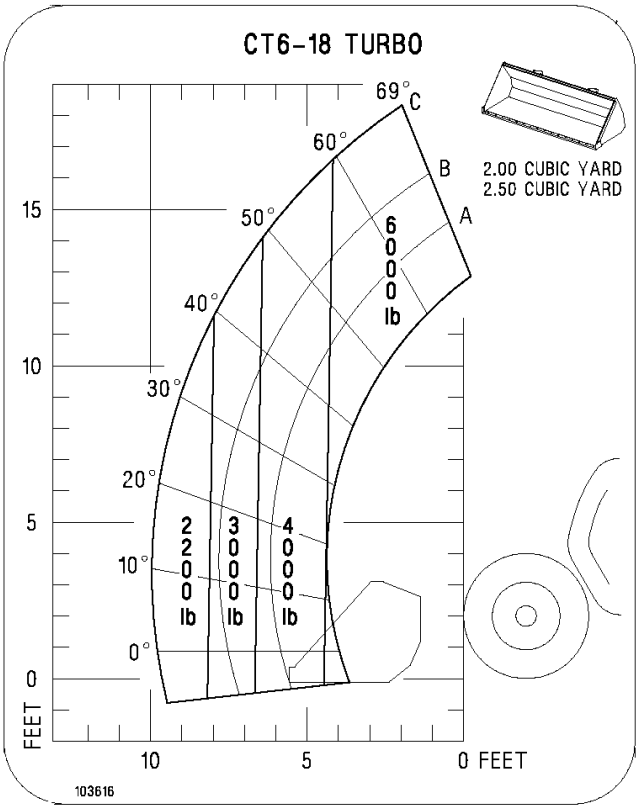

Torque Specifications

Use these torque values when tightening hardware (excluding: locknuts and self-tapping, thread-forming and metal screws) unless otherwise specified.

Unified National Thread	Grade 2		Grade 5		Grade 8	
	Dry	Lubed	Dry	Lubed	Dry	Lubed
8-32	19*	14*	30*	22*	41*	31*
8-36	20*	15*	31*	23*	43*	32*
10-24	27*	21*	43*	32*	60*	45*
10-32	31*	23*	49*	36*	68*	51*
1/4-20	66*	50*	9	75*	12	9
1/4-28	76*	56*	10	86*	14	10
5/16-18	11	9	17	13	25	18
5/16-24	12	9	19	14	25	20
3/8-16	20	15	30	23	45	35
3/8-24	23	17	35	25	50	35
7/16-14	32	24	50	35	70	55
7/16-20	36	27	55	40	80	60
1/2-13	35	35	75	55	110	80
1/2-20	40	40	90	65	120	90
9/16-12	55	55	110	80	150	110
9/16-18	60	60	120	90	170	130
5/8-11	75	75	150	110	220	170
5/8-18	85	85	180	130	240	180
3/4-10	130	130	260	200	380	280
3/4-16	150	150	300	220	420	320
7/8-9	125	125	430	320	600	460
7/8-14	140	140	470	360	660	500
1-8	190	190	640	480	900	680
1-14	210	210	710	530	1000	740

Metric Course Thread	Grade 8.8		Grade 10.9		Grade 12.9	
	Dry	Lubed	Dry	Lubed	Dry	Lubed
M6-1	8	6	11	7	13.5	10*
24M8-1.25	19	14	27	20	32.5	24*
M10-1.5	37.5	28	53	39	64	47
M12-1.75	65	48	91.5	67.5	111.5	82
M14-2	103.5	76.5	145.5	108	176.5	131
M16-2	158.5	117.5	223.5	165.5	271	200

* *All torque values are in lb-ft, except those marked with an *, which are in lb-in.*
For metric torque values (Nm), multiply lb-ft value x 1.355 or lb-in value x 0.113.

INTENTIONALLY BLANK

Index

W

GEHL

NEW CONSTRUCTION EQUIPMENT

TELESCOPIC HANDLER

WARRANTY

GEHL CONSTRUCTION DIVISION of the **GEHL COMPANY**, hereinafter referred to as GEHL, warrants new GEHL Telescopic Handlers, to the Original Retail Purchaser to be free from defects in material and workmanship for a period of twelve (12) months from the Warranty Start Date.

GEHL CONSTRUCTION WARRANTY SERVICE INCLUDES:

Genuine GEHL parts and labor costs required to repair or replace equipment at the selling dealer's business location.

GEHL MAKES NO REPRESENTATIONS OR WARRANTIES OF ANY KIND, EXPRESS OR IMPLIED (INCLUDING THE IMPLIED WARRANTIES OF MERCHANTABILITY AND FITNESS FOR PARTICULAR PURPOSE), EXCEPT AS EXPRESSLY STATED IN THIS WARRANTY STATEMENT.

GEHL CONSTRUCTION WARRANTY SERVICE DOES NOT INCLUDE:

1. Transportation to selling dealer's business location or, at the option of the Original Retail Purchaser, the cost of a service call.
2. Used equipment.
3. Components covered by their own non-GEHL warranties, such as tires, trade accessories and engines.
4. Normal maintenance service and expendable, high-wear items.
5. Repairs or adjustments caused by: improper use; failure to follow recommended maintenance procedures; use of unauthorized attachments; accident or other casualty.
6. Liability for incidental or consequential damages of any type, including, but not limited to, lost profits and expenses of acquiring replacement equipment.

No agent, employee or representative of GEHL has any authority to bind GEHL to any warranty except as specifically set forth herein. Any of these limitations excluded by local law shall be deemed deleted from this warranty; all other terms will continue to apply.

WARNING

THIS OPERATOR'S MANUAL IS PROVIDED FOR OPERATOR USE

DO NOT REMOVE FROM THIS MACHINE

Do not start, operate or work on this machine until you have carefully read and thoroughly understand the contents of the operator's manual.

Failure to follow safety, operating and maintenance instructions could result in serious injury to the operator or bystanders, poor operation, and costly breakdowns.

If you have any questions on proper operation, adjustment or maintenance of this machine, contact your dealer or the service department of Gehl Company before starting or continuing operation.

California Proposition 65 Warnings

Diesel engine exhaust and some of its constituents are known to the State of California to cause cancer and birth defects or other reproductive harm.

Battery posts, terminals and related accessories contain lead and lead compounds, chemicals known to the State of California to cause cancer and birth defects or other reproductive harm. **Wash hands after handling battery.**

GEHL®

GEHL Company 143 Water Street, P.O. Box 179, West Bend, WI 53095-0179 U.S.A.
www.gehl.com

913223/BP0206

PRINTED IN U.S.A.