1287

Manure Spreader

PARTS MANUAL

Form No.
907543
Revision B

GEHL® AGRICULTURE

Introduction

When ordering service parts, specify the correct part number, full description, quantity required, the unit model number and serial number. For your safety and continued proper operation, use only genuine GEHL service parts.

The Manure Spreader model and serial numbers for this unit are on a decal located on the left side of the main frame at the front left corner of the box. “Right” and “left” are determined from a position standing behind the Manure Spreader.

GEHL Company reserves the right to make changes or improvements in the design or construction of any part of the unit without incurring the obligation to install such changes on any previously delivered units.

NOTE: *On original tire replacement, Company policy prohibits the sale of replacement tires for all GEHL machinery. Replacement wheel sets are available and tire size information is called out with the wheel sets to facilitate replacement tire selection. ALL REPLACEMENT TIRES MUST BE PURCHASED LOCALLY.*

Refer to the abbreviations table located on this page for the various fastener descriptions. Standard attaching hardware torque values are provided on the inside back cover.

In the exploded view parts list, Reference Numbers may have additional information following the Reference Number. A tear drop symbol indicates an application of a “wet” product such as oil, and the number inside the tear drop will correspond to the description in the Parts List. A number inside a hexagon will be the torque value required, in foot-pounds, on the associated Reference Number. Items shown in the parts list that do not have Reference Numbers are shown for reference purposes only and are NOT available for purchase.

Unless otherwise specified, all cap screws or bolts are Grade 5, zinc plated; hexagon nuts for Grade 5 cap screws or bolts are Grade B; hexagon nuts for other cap screws or bolts are Grade A.

NOTE: *The following abbreviations may be used herein:*

AR	- As Required
ASSD	- Assembled
ASSY	- Assembly
CB	- Carriage Bolt
CCW	- Counterclockwise
CP	- Cotter Pin
CS	- Cap Screw (Hexagon Head)
CTR	- Center
CW	- Clockwise
DEG	- Degree
DIA	- Diameter
FCS	- Flanged Cap Screw
FHMS	- Flat Head Machine Screw
FL	- Flanged
FLN	- Flanged Lock Nut (Hexagon)
FLS	- Flanged Lock Screw (Hexagon)
FW	- Flat Washer
GA	- Gauge
GR	- Grade
HD	- Hard or Head
HN	- Hex Nut
INCL	- Includes
JT	- Joint
LG	- Large
LH	- Left Hand
LN	- Lock Nut
LW	- Lock Washer
M	- Metric
MM/mm	- Millimeter
NF	- National Fine
NS	- Not Serviced
PB	- Plow Bolt
PTO	- Power Take Off
RH	- Right Hand
RHMS	- Round Head Machine Screw
RPM	- Revolutions Per Minute
RT	- Right
SERR	- Serrated
SHCS	- Socket Head Cap Screw
SHSS	- Socket Head Set Screw
SN	- Serial Number or Slotted Nut
SQ	- Square
T	- Tooth or Teeth
TFS	- Thread Forming Screw
THMS	- Truss Head Machine Screw
THRD	- Thread
WLDMT	- Weldment
#	- Number
⬡	- Torque Required in foot-pounds
💧	- Indicates a Fluid Application

TABLE OF CONTENTS

Introduction . . . . . Inside Front Cover
Table of Contents 1
Decal Locations 2-3
PTO 4-5
Hitch Frame & Jack 6-7
Main Frame, Floor, Axle & Hub Assembly 8-9
Apron 10-11
Apron Controls 12-13
Apron Control Hydraulic Cylinder 14-15
Standard Apron Drive - Front Drive 16-17
Side Drive 18-19
Standard Apron Drive - Rear Drive 20-21
Hydraulic Apron Drive - Flow Control Valve 22-23
Hydraulic Apron Drive - Rear Drive 24-25
Hydraulic Drive Motor 26-27
Beater Drive Gearbox 28-29
Flow Control Valve 30-31
Apron Drive Gearbox (Standard & Hydraulic Apron Drive) 32-33
Endgate, Sides & Shields 34-37
Beater 38-39
Splash Guard 40-41
Upper Beater 42-43
Litter Pan 44-45
Slow Speed 46-47
Liquid Sides 48-49
Hydraulic Endgate 50-51
Endgate Hydraulic Cylinder . . . . . NO TAG-NO TAG
Options & Accessories 54-58
  Transport Lights 54-57
  Safety Chain 58
Alphabetical Index 59
Numerical Index 60-67
Hydraulic Fitting Torque Data 68
Standard Hardware Torque Specifications . . . . . Inside Back Cover

DECAL LOCATIONS

GENERAL INFORMATION

Decal location information is provided to assist in the proper selection and application of new decals, in the event the original decals become damaged or the machine is repainted. Refer to the listing for the illustration reference number, part number, description and quantity of each decal provided in the kit. Refer to the appropriate illustrations for replacement locations.

NOTE: *Refer to the SAFETY chapter in the Operator's Manual for specific information on the safety decals in the decal kits.*

To ensure proper selection for correct replacement decals, compare all of the various close-up location illustrations of the machine BEFORE starting to refinish the unit. Then circle each pictured decal applicable to your machine, while checking off its part number in the listing. After verifying all the decals needed for replacement, set aside any unneeded decals for disposal.

NEW DECAL APPLICATION

Surfaces MUST be free from dirt, dust, grease and other foreign material before applying the new decal. To apply a solid-formed decal, remove the smaller portion of the decal backing paper and apply this part of the exposed adhesive backing to the clean surface while maintaining proper position and alignment. Slowly peel off the other portion of the backing paper while applying hand pressure to smooth out the decal surface.

WARNING

ALWAYS observe safety precautions listed on decals. If decals become damaged, or if the unit is repainted, replace the decals. If repainting, BE SURE that ALL decals from the kits that apply to your machine are affixed to your unit.

The decal kit part number for the 1177, 1217, 1287 & 1410 Manure Spreaders is 143383. The kit includes the following:

Ref. No.	Part No.	Description & Quantity
01	145216	Red Reflector Strip (2 Places) (3 on 1410 units with Upper Beater Guard, not shown)
02	145217	Amber Reflector Strip (1287 & 1410 Only)
03	091444	DANGER - Rotating Component
04	093020	Lubrication Symbol
05	093366	IMPORTANT - Store Manual Here
06	093367	WARNING - Owner's Responsibility & Read Manual
07	093373	WARNING - General Safety Precautions
08	093457	WARNING - Keep Door Closed (2 Places) (3 Places on units with Upper Beater)
09	094913	GEHL 3-1/4 x 15-1/4″
10	142984	540 RPM
	143002	1000 RPM
11	142985	Keep Well Lubricated
12	143000	Indicator Arrow
13	143001	150 ft-lb Wheel Bolt torque (HD Wheels)
14	143003	Apron Speed Selector Control (Hydraulic Apron Drive Models)
15	143004	Apron Speed Selector Control (Standard PTO Apron Drive Models)
16	143005	DANGER - NO RIDERS
17	143008	120 ft-lb Wheel Bolt torque (Std Wheels)
18	143007	DANGER - Shield Missing

The following decals are not included in the above kit but may be needed to complete the decaling of your unit.

19	094914	GEHL 5 x 23-1/2″ (2 Places on 1177, 1217 & 1287)(Both Sides)
	122617	GEHL 6.9 x 32-1/2″ (2 Places on 1410) (Both Sides)
20	143014	1177 (2 Places 1177 ONLY)
	143015	1217 (2 Places 1217 ONLY)
	143016	1287 (2 Places 1287 ONLY)
	143243	1410 (2 Places 1410 ONLY)

PAINT NOTICE

Use this list to order paint for refinishing:

906315	**One Gal. AG Red**
906324	**One Qt. Light Grey**
906316	**6 (12 oz. Spray Cans) AG Red**
906325	**6 (12 oz. Spray Cans) Light Grey**

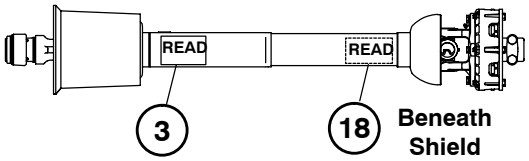

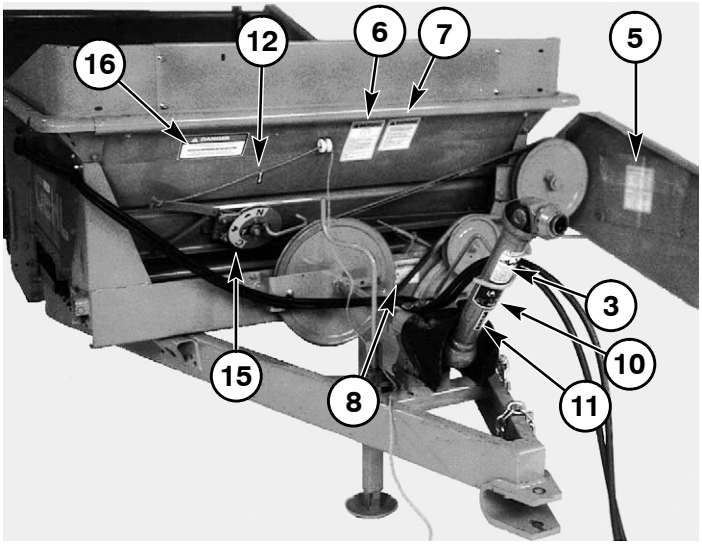
16
12
6
7
5
3
10
15
8
11

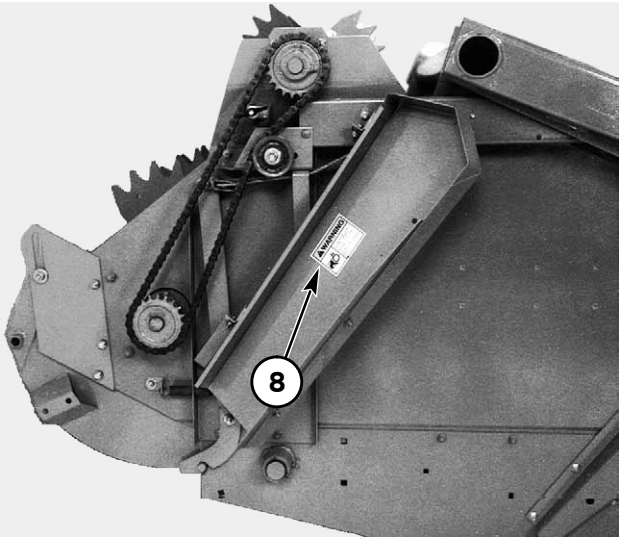
8

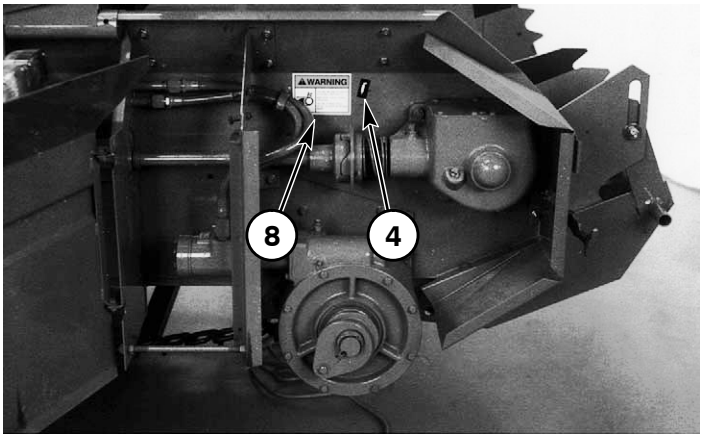
WARNING
8
4

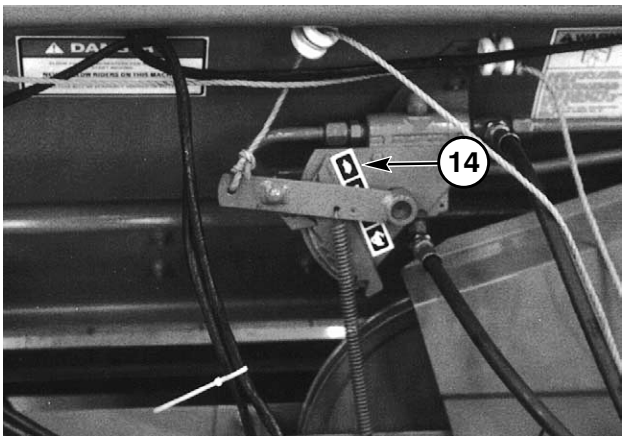
14

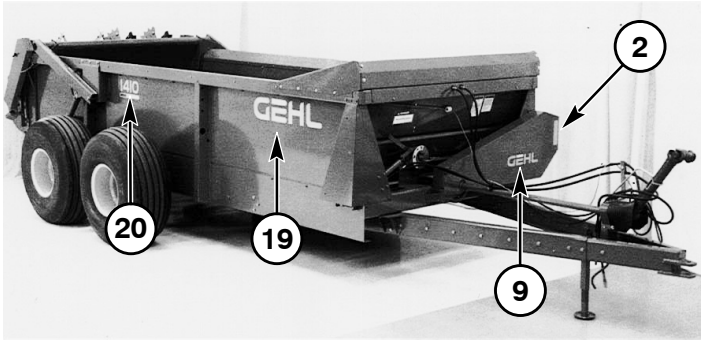
2
GEHL
GEHL
20
19
9

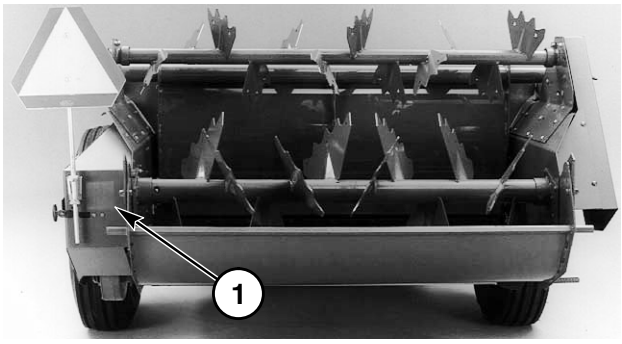
1

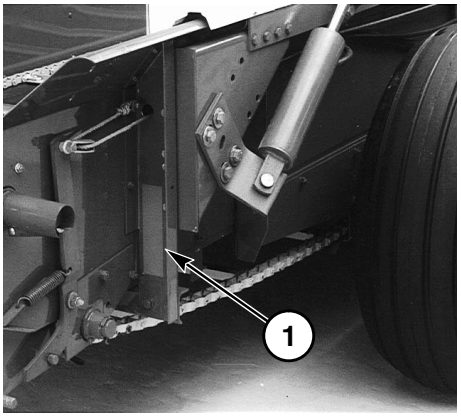
1

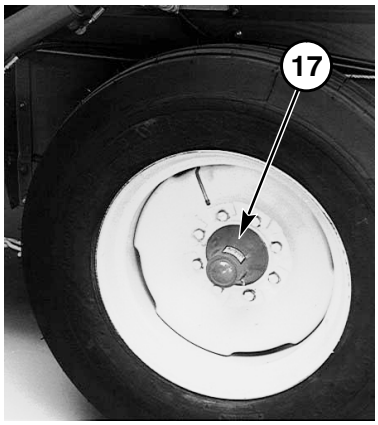
17

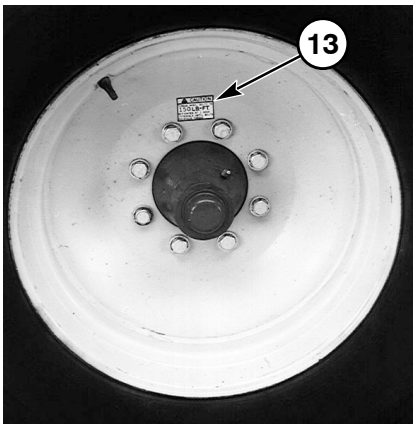
13

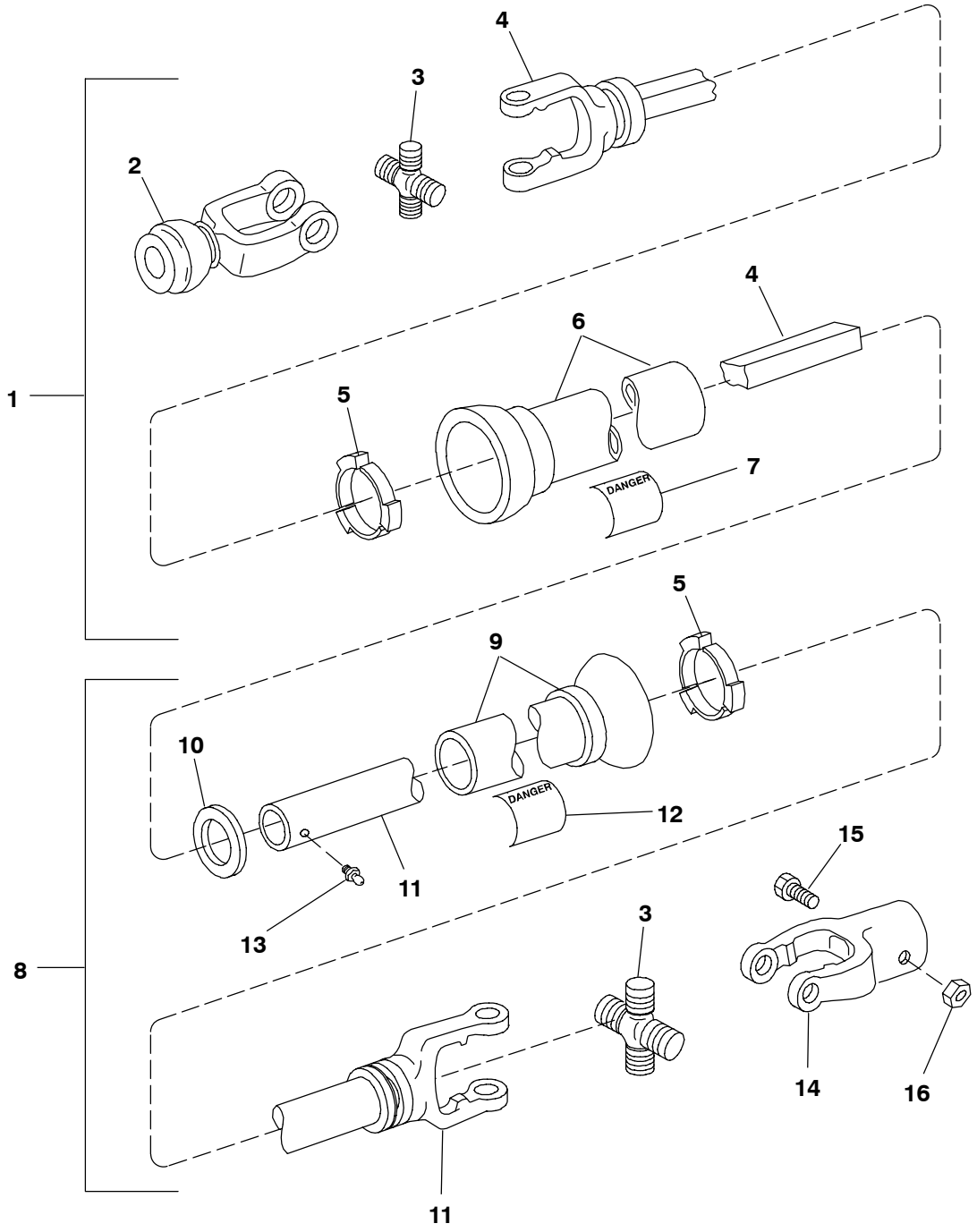
4
3
2
4
6
1
5
7
DANGER
5
9
10
DANGER
12
15
11
13
3
8
14
16
11

Ref. No.	Part No.	Description	Qty. Req.
01	142973	PTO ASSY/FRONT (**540** RPM) (INCL REF. 02-06)	1
	143316	PTO ASSY/FRONT (**1000** RPM) (INCL REF. 02-06)	1
02	152502	YOKE ASSY/SLIDE COLLAR (**540** RPM)	1
	152503	YOKE ASSY/SLIDE COLLAR (**1000** RPM)	1
03	005870	KIT/CROSS	2
04	152326	YOKE & SHAFT WELD/ASSY (INCL REF. 05)	1
05	153074	BUSHING/SHIELD	6
06	153073	BELL & OUTER SHIELD WELD/ASSY (INCL DANGER SIGN)	1
07	091444	SIGN/DANGER	1
08	142974	PTO ASSY/REAR (INCL REF. 03, 05 & 9-16)	1
09	153077	BELL & INNER SHIELD WELD/ASSY	1
10	153078	BEARING/SUPPORT/SHIELD	1
11	153084	YOKE & TUBE WELD/ASSY (INCL REF. 05 & 12)	1
12	143007	SIGN/DANGER	1
13	570014	FITTING/LUBE 1/4-28 SHORT	1
14	152310	YOKE/REAR	1
15	153007	SCREW/CAP/HEX HD G8 1/4X2-1/2	1
16	071700	NUT/LOCK 1/4	1

1287 - HITCH FRAME & JACK

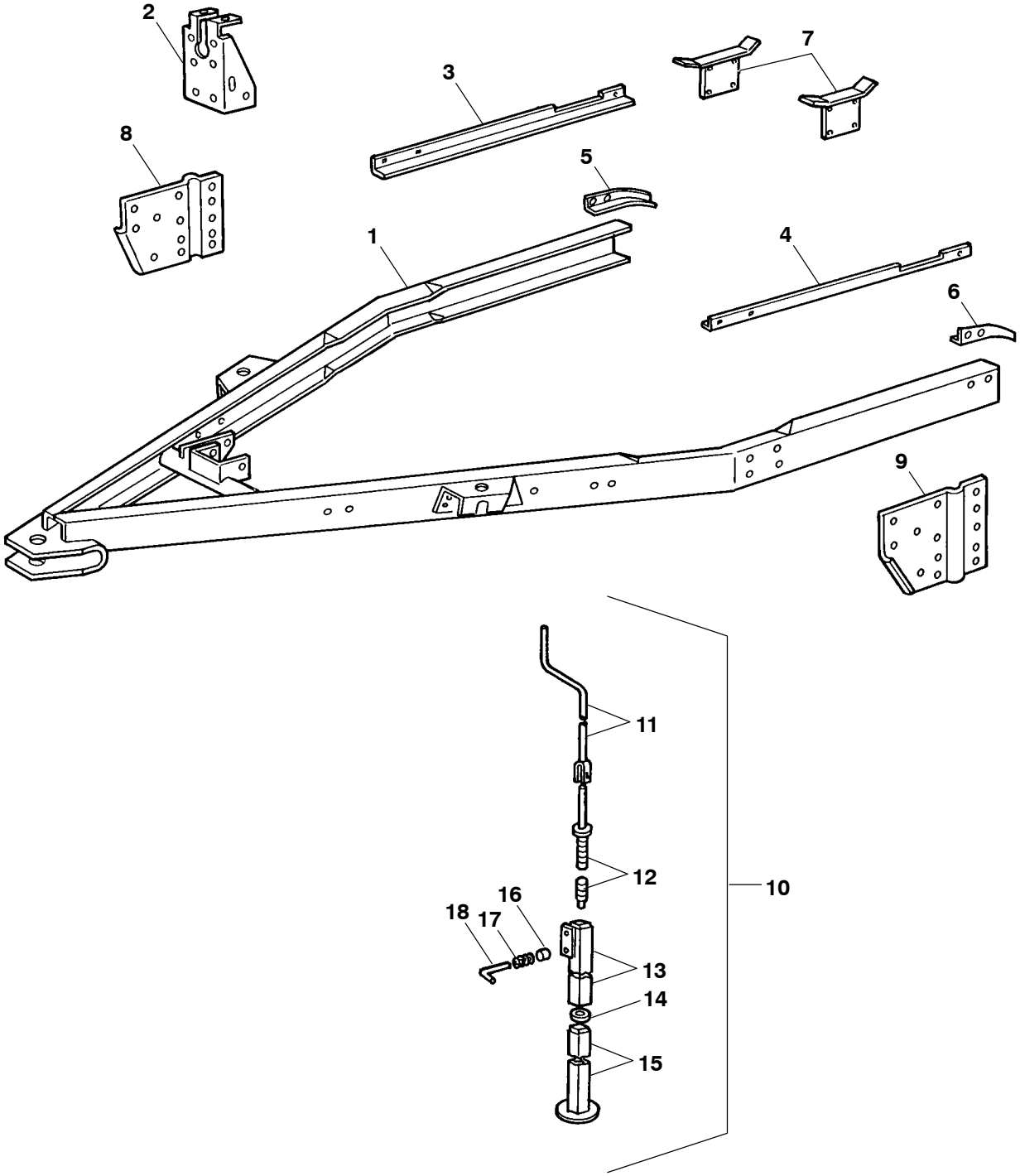

Ref. No.	Part No.	Description	Qty. Req.
01	152967	HITCH FRAME WELD/ASSY	1
02	152880	SUPPORT/SHAFT	1
	650494	SCREW/CAP/HEX HD G5 1/2X1	4
	081374	NUT/FLANGE/HEX 1/2 USR	4
03	152770	GUIDE/APRON/RH	1
	650786	BOLT/CARRIAGE G5 3/8X1-1/4	4
	654009	WASHER	8
	152991	NUT/FLANGE/HEX 3/8 USR	4
04	152769	GUIDE/APRON/LH	1
	650786	BOLT/CARRIAGE G5 3/8X1-1/4	4
	654009	WASHER	8
	152991	NUT/FLANGE/HEX 3/8 USR	4
05	152756	GUIDE/APRON/RH	1
	652099	BOLT/PLOW G5 3/8X1-1/2	2
	654009	WASHER 1/2	4
	152991	NUT/FLANGE/HEX 3/8 USR	2
06	152755	GUIDE/APRON/LH	1
	652099	BOLT/PLOW G5 3/8X1-1/2	2
	654009	WASHER 1/2	4
	152991	NUT/FLANGE/HEX 3/8 USR	2
07	152732	GUIDE/APRON/REAR	2
	650569	SCREW/CAP/HEX HD G5 1/2X1-3/4	8
	152324	WASHER/HARDENED	8
	653018	NUT/HEX G5 1/2	8
	153002	NUT/HEX 5/8	8
08	152882	PLATE/RH	1
	650453	SCREW/CAP/HEX HD G5 1/2X1-1/2	3
	153004	SCREW/CAP/HEX HD G8 1/2X1-1/4	4
	651028	BOLT/CARRIAGE G5 7/16X1-1/4	3
	152324	WASHER	7
	654028	WASHER/LOCK 7/16	3
	653018	NUT G5 1/2	7
	653015	NUT G5 7/16	3
09	152881	PLATE/LH	1
	650453	SCREW/CAP/HEX HD G5 1/2X1-1/2	3
	153004	SCREW/CAP/HEX HD G8 1/2X1-1/4	4
	651028	BOLT/CARRIAGE G5 7/16X1-1/4	3
	152324	WASHER	7
	654028	WASHER/LOCK 7/16	3
	653018	NUT G5 1/2	7
	653015	NUT G5 7/16	3
10	152856	JACK/ASSY	1
11	152705	CRANK WELD/ASSY	1
	651023	SCREW/CAP/HEX HD G5 3/8X2	1
	654004	WASHER 3/8	2
	071703	NUT/LOCK 3/8	1
	13E24	PIN/ROLL 1/4X1-1/2	1
12	152663	JACK SCREW WELD/ASSY	1
	654014	WASHER 3/4	1
	655018	PIN/COTTER 3/16X1-1/4	1
13	152797	JACK TUBE WELD/ASSY/OUTER	1
	053894	FITTING/LUBE/SELF-TAPPING/ STRAIGHT 1/4-28	1
14	152472	BEARING/THRUST	1
15	152781	JACK TUBE WELD/ASSY/INNER	1
16	152589	SPACER	1
17	152284	SPRING	1
18	152654	PIN/JACK	1
	654012	WASHER 5/8	1
	152640	PIN/SPRING 1/8X1	1

1287 - MAIN FRAME, FLOOR, AXLE & HUB ASSEMBLY

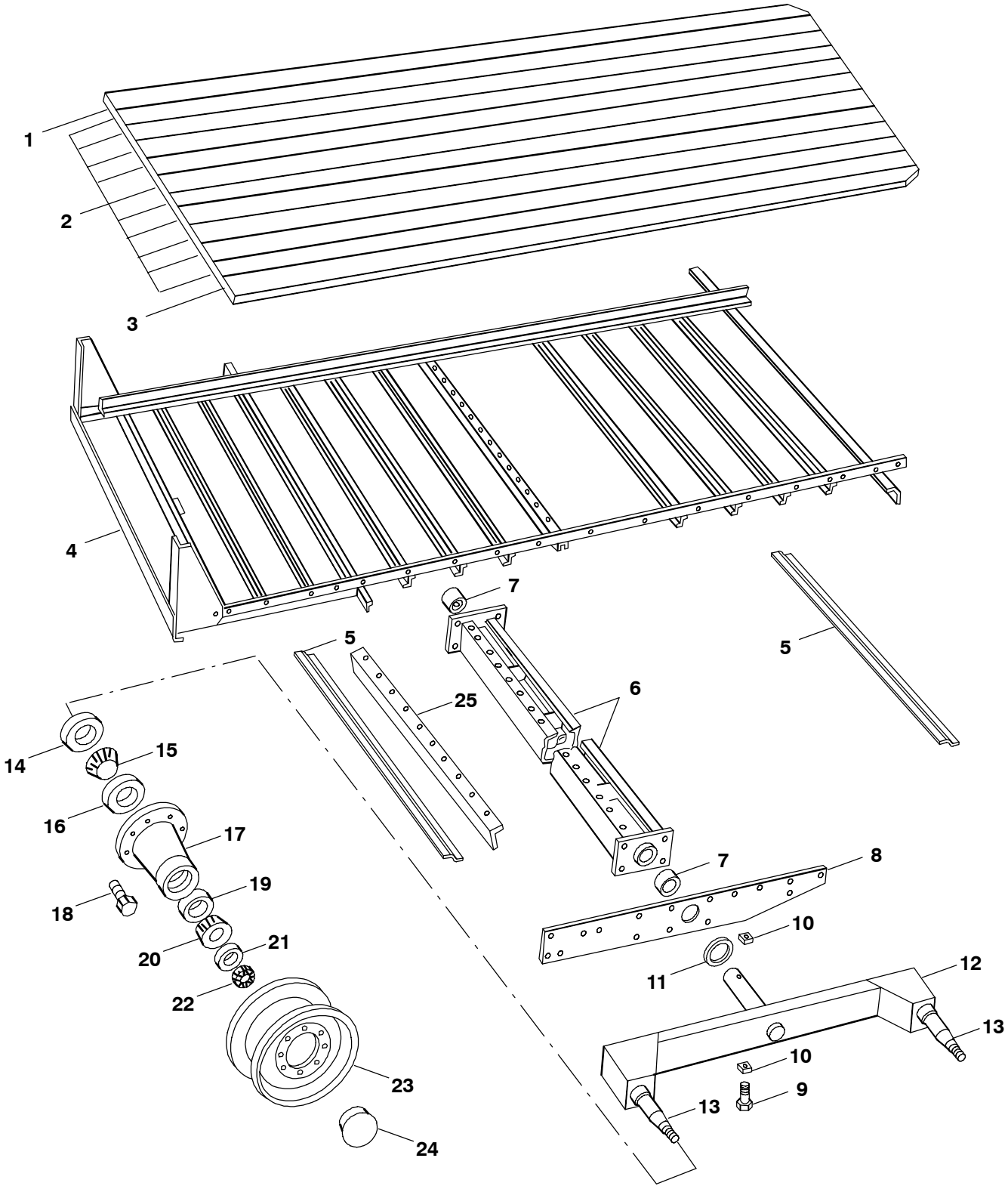

1287 - MAIN FRAME, FLOOR, AXLE & HUB ASSEMBLY

Ref. No.	Part No.	Description	Qty. Req.
01	152514	FLOOR BOARD/RH 185.10IN (CUT TO REQUIRED LENGTH)	1
	152445	SCREW/SELF-TAPPING 5/16X1-1/2	2
02	152513	FLOORBOARD/CENTER 185.10IN (CUT TO REQUIRED LENGTH)	8
	152445	SCREW/SELF-TAPPING 5/16X1-1/2	24
03	152511	FLOORBOARD/LH 185.10IN (CUT TO REQUIRED LENGTH)	1
	152445	SCREW/SELF-TAPPING 5/16X1-1/2	2
04	152973	MAIN FRAME WELD/ASSY	1
	650844	SCREW/CAP/HEX HD G8 5/8X1-3/4	2
	152455	WASHER	4
	129311	NUT/LOCK GC 5/8	2
05	152772	CLIP	1
	152445	SCREW/SELF-TAPPING 5/16X1-1/2	10
06	152959	AXLE WELD/ASSY (INCL REF. 07)	2
	570009	FITTING/GREASE 1/4-28 45DEG	2
	650633	SCREW/CAP/HEX HD G5 1/2X1-1/4	8
	152324	WASHER/HARDENED	8
	653018	NUT/HEX G5 1/2	8
07	152679	BUSHING	8
08	152804	PLATE/SIDE	2
	651028	BOLT/CARRIAGE G5 7/16X1-1/4	10
	153006	SCREW/CAP/HEX HD G8 5/8X1-1/4	4
	654028	WASHER/LOCK 7/16	10
	152455	WASHER .135 X .656ID X 1.12OD	4
	653015	NUT/HEX 7/16	10
	153002	NUT/HEX G5 5/8	4
09	152999	SCREW/CAP/HEX HD G5 7/16X4-1/2	2
	071705	NUT/LOCK/HEX GB 7/16	2
10	152450	WASHER/SQUARE	4
11	152334	SPACER .060 X 3-1/16ID X 4-1/2OD	AR
12	152958	AXLE BEAM WELD/ASSY(INCL REF. 13)	2
13	152634	SPINDLE (WELD IN)	2
14	152480	SEAL/OIL	4
15	152345	CONE/BEARING/INNER	4
16	520013	CUP/BEARING/INNER	4
17	152955	HUB/WHEEL	4
	143008	SIGN/CAUTION	4
	570009	FITTING/GREASE 1/4-28 45DEG	4
18	152277	BOLT/WHEEL	32
19	520046	CUP/BEARING/OUTER	4
20	520047	CONE/BEARING	4
21	152642	WASHER/HARDENED	4
22	653102	NUT/HEX/SLOTTED 7/8UNF	4
	655018	PIN/COTTER 3/16X1-1/4	4
23	152335	WHEEL/W8BX20	4
	152532	WHEEL/8.75X22.5 FOR 11.00X22.5 TRUCK TIRE	4
	171612	KIT/RIM (CONTAINS (1) W14X16.1 WHEEL, (8) CAPSCREWS & (8) WASHERS)	1
24	064415	CAP/DUST	4
25	152775	CLIP/FRONT	1
	152445	SCREW/SELF-TAPPING 5/16X1-1/2	10

1287 - APRON

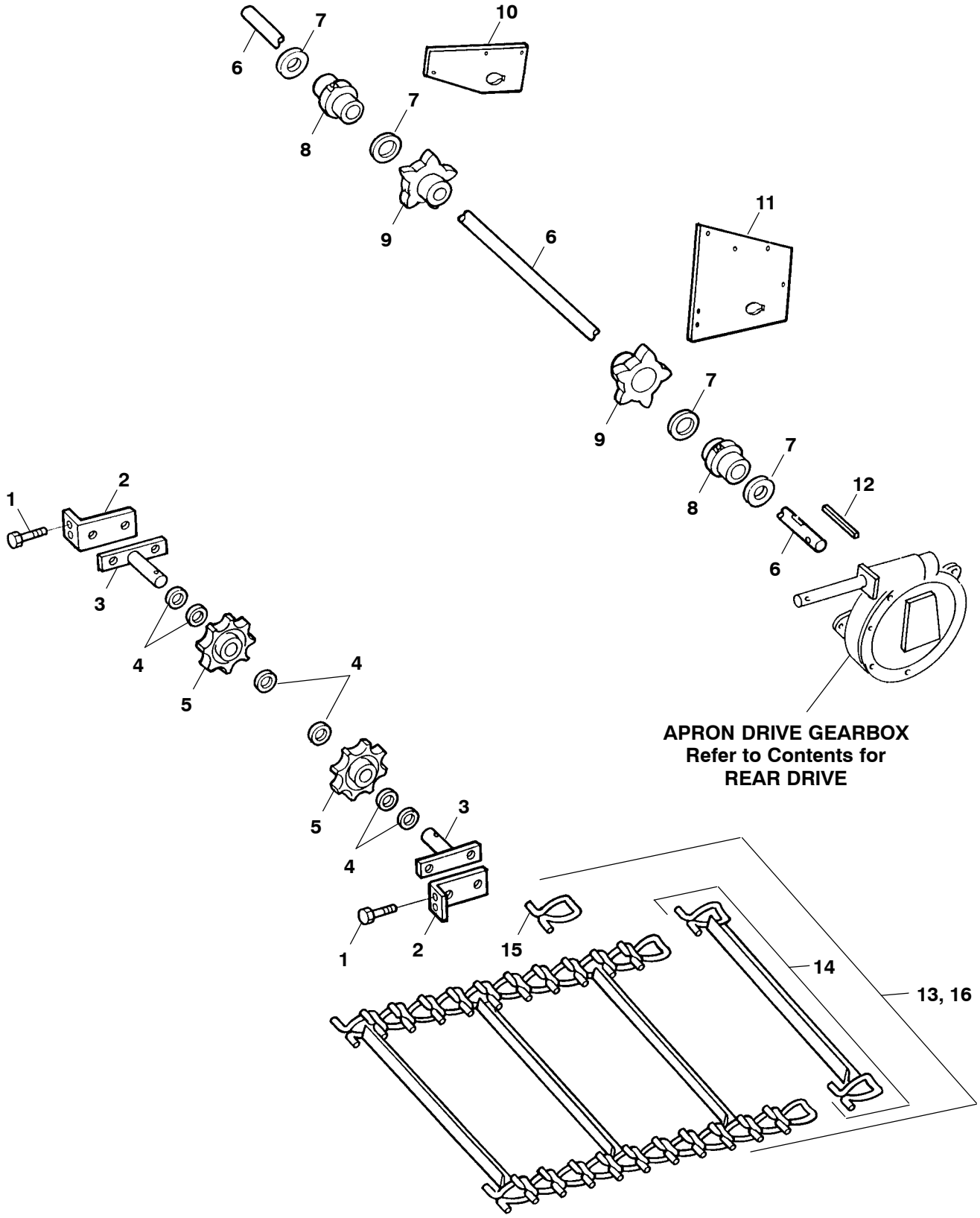
10
7
6
7
8
9
6
11
9
7
7
8
12
6
1
2
3
4
5
4
APRON DRIVE GEARBOX
Refer to Contents for
REAR DRIVE
5
3
4
1
2
15
14
13, 16

Ref. No.	Part No.	Description	Qty. Req.
01	153051	BOLT/HEX 7/16X3-1/2	2
	653015	NUT/HEX 7/16	4
02	152652	ADJUSTER	2
03	152719	IDLER SHAFT WELD/ASSY	1
	652146	BOLT/CARRIAGE G5 7/16X1-1/2	4
	654028	WASHER/LOCK 7/16	4
	653015	NUT/HEX 7/16	4
04	152274	WASHER .135 X .76ID X 1-3/8OD	AR
05	152525	SPROCKET/IDLER/6T	2
	655020	PIN/COTTER 3/16X1-1/2	2
06	152792	SHAFT/APRON/REAR	1
	650554	PIN/COTTER 1/4X2-1/4	2
07	152278	WASHER .060 X 1.53ID X 2OD	AR
08	152381	BEARING/APRON SHAFT	2
	570002	FITTING/LUBE 1/8 PIPE THREAD	1
	570005	FITTING/LUBE 1/8 PIPE THREAD 90DEG	1
09	152520	SPROCKET/6T	2
	152763	KEY/WOODRUFF/#27 1/4X2-1/8 HEAT TREATED	2
	152476	SCREW/SET/HSH/CUP PT. 3/8X1/2	2
10	152992	HANGER/RH/APRON SHAFT	1
	650494	SCREW/CAP/HEX HD G5 1/2X1	2
	654030	WASHER/LOCK 1/2	2
	653018	NUT/HEX 1/2	2
11	152791	HANGER/LH/APRON SHAFT	1
12	152380	KEY/SQ 3/8X6	1
13	153048	APRON ASSY/T-ROD (INCL 20 OF REF. 14 & 292 OF REF. 15 BUT MUST BE ASSEMBLED)	1
14	153045[a]	SLAT WELD/ASSY	AR
15	153042	LINK/T-ROD	AR
16	153049	APRON ASSY/T-ROD (INCL 40 OF REF. 14 & 252 OF REF. 15 BUT MUST BE ASSEMBLED)	1

a) Component of Double Slat Apron Kit.

1287 - APRON CONTROLS

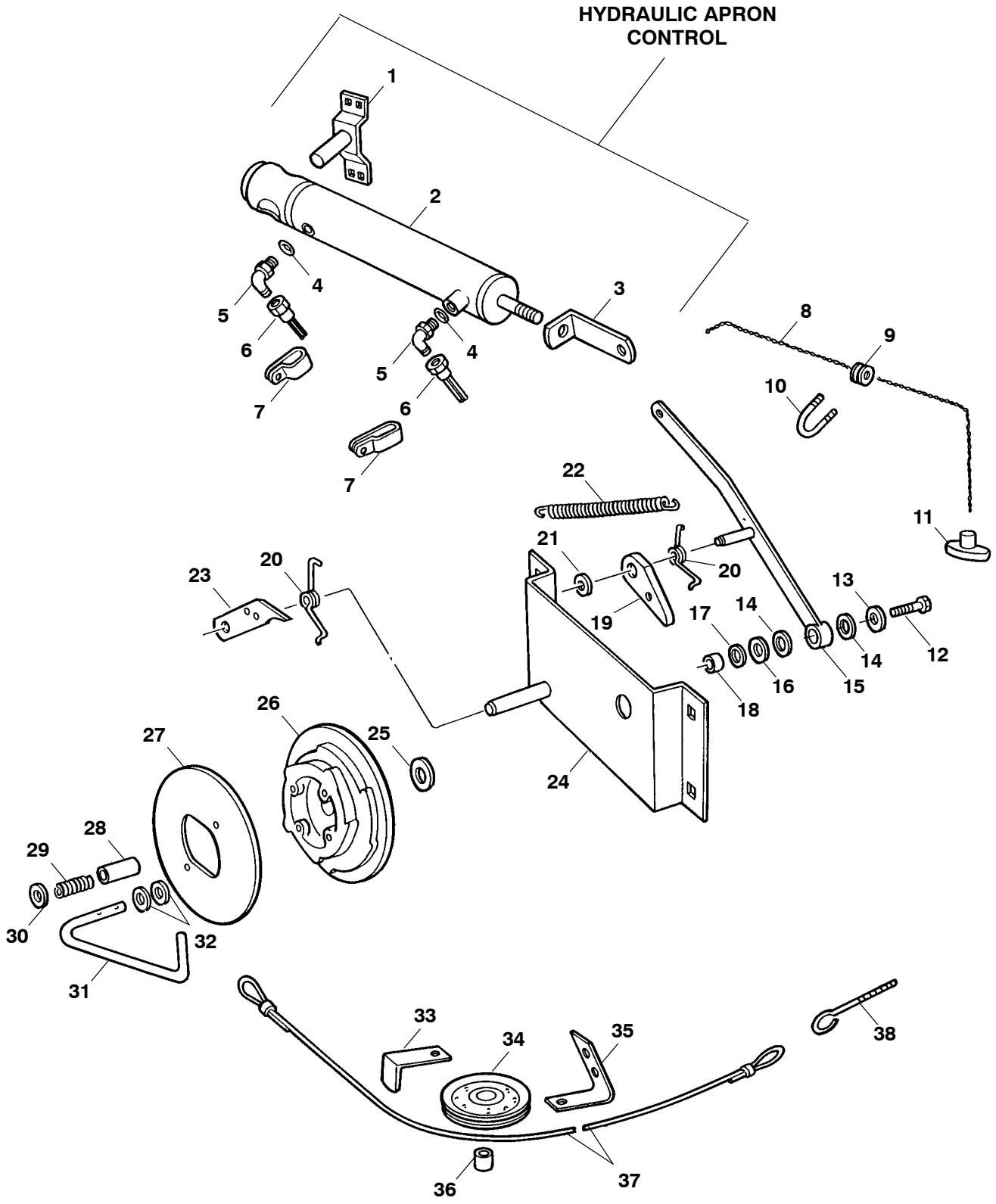

Ref. No.	Part No.	Description	Qty. Req.
01	153018[a]	SUPPORT WELD/ASSY	1
	650704	BOLT/CARRIAGE G5 3/8X1	2
	654005	WASHER 3/8	2
	654026	WASHER/LOCK 3/8	2
	653010	NUT/HEX 3/8	2
02	152844[a,b]	HYDRAULIC CONTROL CYLINDER/ASSY	1
	653045	NUT/JAM/HEX 1/2UNF	2
	152625	WASHER 1	1
	655010	PIN/COTTER 1/8X1-1/2	1
03	152651[a]	LINK	1
04	152575[a]	O-RING	2
05	152577[a]	ELBOW/MALE 7/16-20UNF THREADS (INCL ONE OF REF. 04)	2
06	152456[a]	HOSE/ASSY 1/4ID X 144IN LG. 7/16-20JIC FEMALE TO 3/8-18NPTF MALE FITTING	2
07	067880[a]	CLAMP/HOSE	2
08	152350	ROPE 1/4IN X 15FT LG.	1
09	059721[c]	GUIDE/ROPE	1
10	152288[c]	U-BOLT	1
	152504	NUT/HEX #10	4
11	152325	GRIP/ROPE (OPTIONAL)	1
12	651064	SCREW/CAP/HEX HD G5 1/2X3-1/4	1
	653044	NUT/JAM/HEX 1/2	1
	653018	NUT/HEX G5 1/2	1
13	654009	WASHER 1/2	1
14	152572	WASHER .135 X .718ID X 1-5/8OD	2
15	152619	LEVER WELD/ASSY	1
16	152311	WASHER .036 X .78ID X 1-1/2OD	AR
17	152282	WASHER .060 X .781ID X 1-1/2OD	AR
18	152600	SPACER	1
19	152730	PAWL	1
	655006	PIN/COTTER 1/8X1	1
	053894	FITTING/LUBE 1/4-28	1
20	152408	SPRING/TORSION	2
21	654009	WASHER 1/2 SAE	AR
22	152301	SPRING	1
23	152355	PAWL/QUADRANT	1
24	153026	SUPPORT WELD/ASSY	1
	650790	BOLT/CARRIAGE G5 3/8X3/4	4
	152991	NUT/SPECIAL	4
25	152422	WASHER/PHENOLIC 29/32ID X 1-5/8OD	1
26	152523	DISC/ROLLOVER	1
27	152650	DISC	1
	152807	SCREW/SELF-TAPPING 5/16X3/4	2
28	152460	SPACER 7/8X1-1/4	1
29	152420	SPRING/COMPRESSION	1
30	152331	WASHER .135 X .531ID X 1-1/2OD	1
31	152692	CONNECTOR	1
	655006	PIN/COTTER 1/8X1	2
32	152285	WASHER .065 X .656ID X 1.06OD	2
33	152313	GUIDE	1
34	152439	SHEAVE/NYLON	1
	650533	SCREW/CAP/HEX HD G5 3/8X1-1/2	1
	152389	WASHER/HARDENED	1
	654026	WASHER/LOCK 3/8	1
	653010	NUT/HEX 3/8	1
35	152579	SUPPORT	1
	650687	BOLT/CARRIAGE G5 5/16X3/4	2
	210-19470	NUT/FLANGE/HEX 5/16	2
36	152343	SPACER	1
37	152390	CONTROL CABLE/ASSY 208-1/4IN LG.	1
38	152299	EYEBOLT	1
	152991	NUT/SPECIAL	2

a) Ref. Nos. 01-07 are components of the Hydraulic Apron Control Kit.

b) For breakdown, refer to Components page titled "Hydraulic Apron Control Cylinder.

c) Standard Apron Drive only.

1287 - APRON CONTROL HYDRAULIC CYLINDER

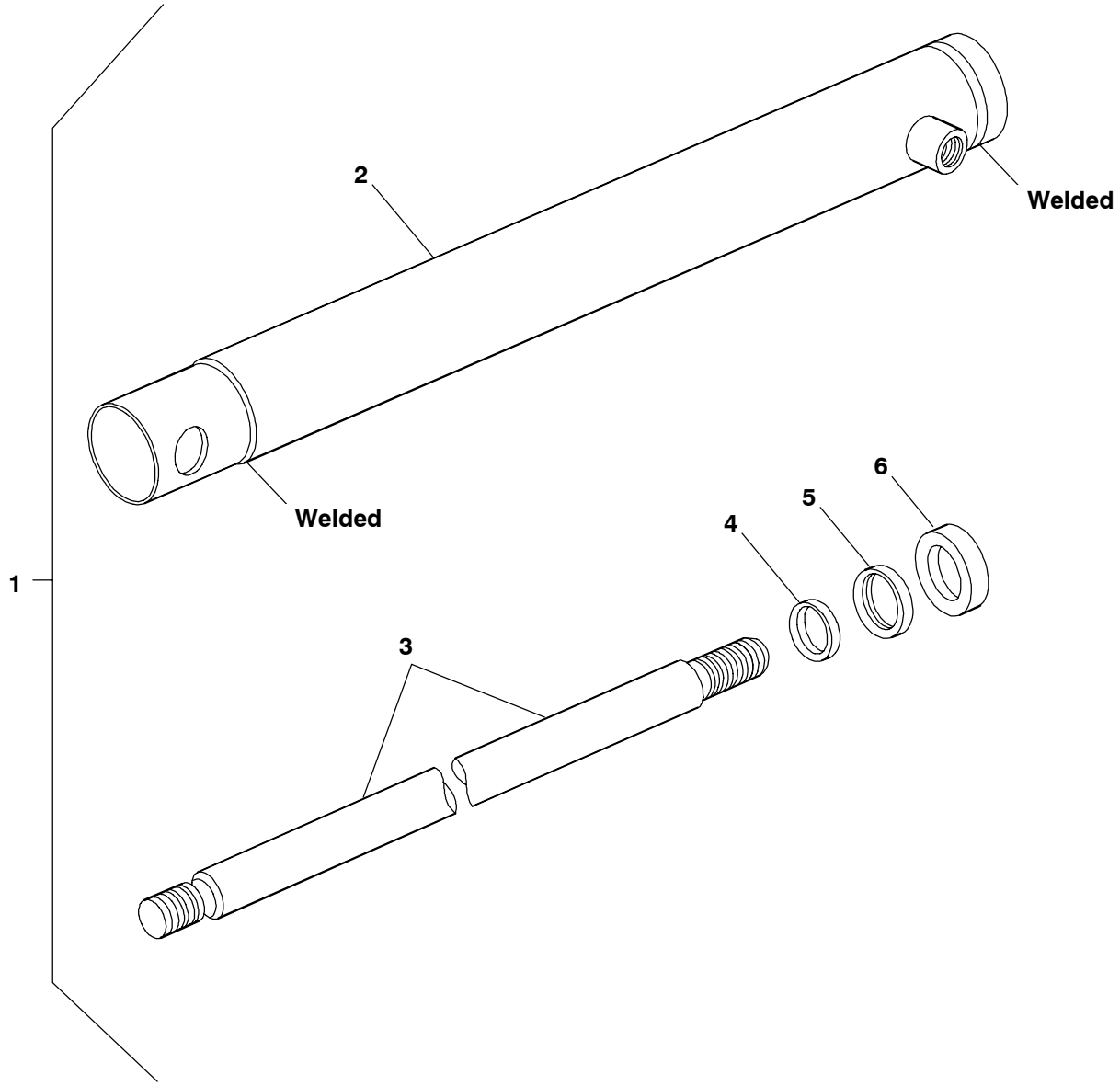

1287 - APRON CONTROL HYDRAULIC CYLINDER

Ref. No.	Part No.	Description	Qty. Req.
01	152844[a]	CYL./ASSY/HYDRAULIC CONTROL	
02	NS[b]	CYLINDER WELD/ASSY	1
03	NS[b]	ROD/PISTON	1
04	NS[b]	O-RING	1
05	NS[b]	WASHER/BACK-UP	1
06	152400	SEAL	1

a) Component of Hydraulic Apron Control Bundle, refer to "Control Group" in the contents for cylinder application.

b) This cylinder is a welded cylinder and cannot be repaired. The only part that can be replaced is the Seal.

1287 - STANDARD APRON DRIVE - FRONT DRIVE

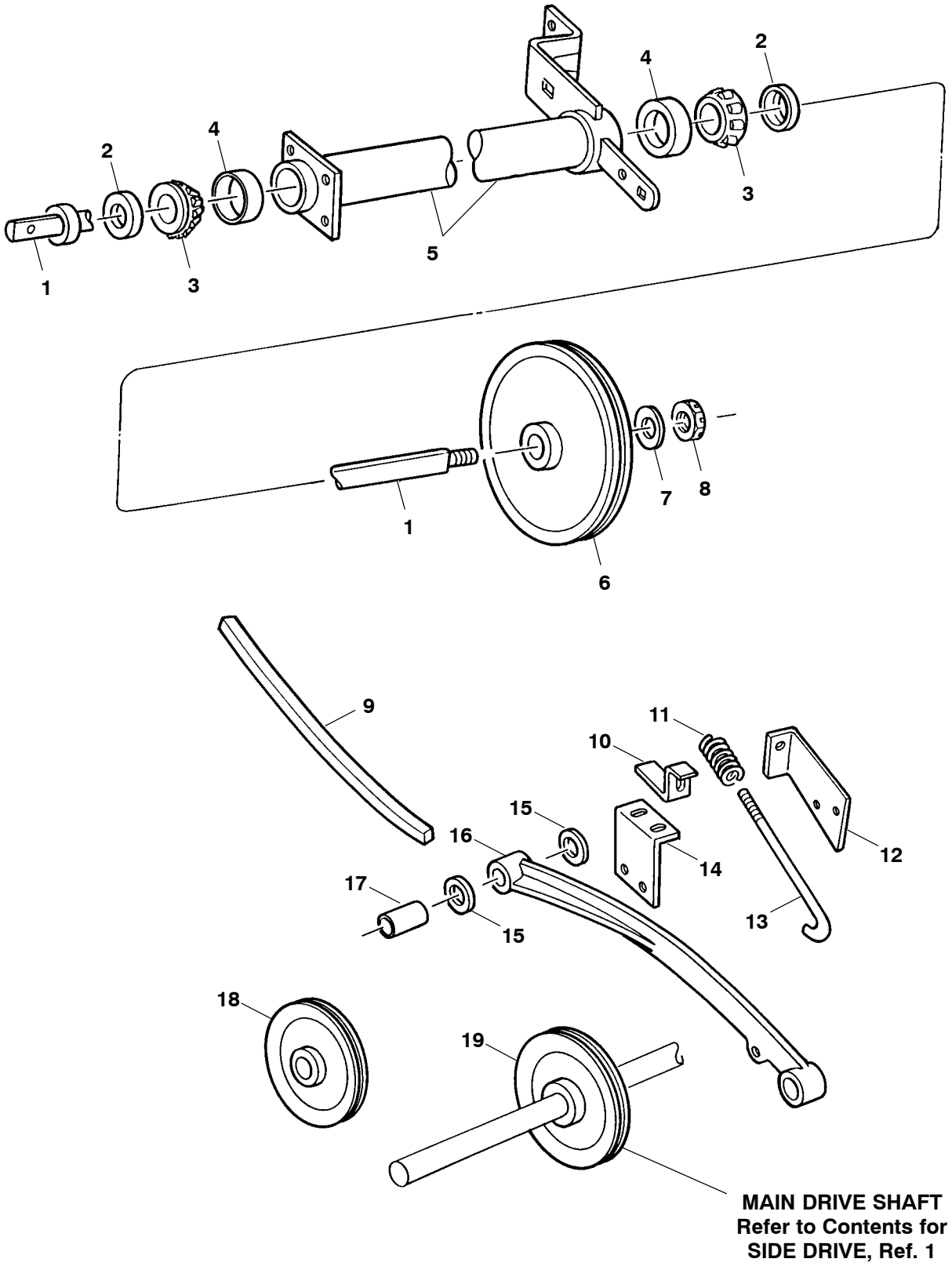

Ref. No.	Part No.	Description	Qty. Req.
01	152645	SHAFT & COLLAR/ASSY	1
02	152582	SHIELD/BEARING	2
03	520206	CONE/BEARING	2
04	520205	CUP/BEARING	2
05	152865	SHAFT SUPPORT WELD/ASSY	1
	570009	FITTING/GREASE 1/4-28 45DEG	1
	076002	FITTING/GREASE 1/4-28 90DEG	1
	651110	SCREW/CAP/HEX HD G5 3/8X1	6
	152991	NUT/FLANGE/HEX 3/8 USR	6
06	143317[a]	SHEAVE WELD/ASSY 16-3/4OD	1
	152780	KEY/WOODRUFF 1/4X2-1/8	1
	650216	SCREW/SET/SQ HD/CUP PT. 3/8X3/4	1
	653038	NUT/JAM 3/8	1
07	152274	WASHER .135 X .76ID X 1.37OD	1
08	152330	NUT/HEX/SLOTTED	1
	655008	PIN/COTTER 1/8X1-1/4	1
09	152388	V-BELT/FRONT DRIVE	1
10	152465	GAUGE	1
11	152361	SPRING/COMPRESSION	1
12	152682	BRACKET	1
	651066	CB 3/8X3/4	2
	152991	NUT/SPECIAL	2
13	152356	J-BOLT	1
	654004	WASHER 3/8 SAE	1
	653010	NUT/HEX 3/8	2
14	152683	BRACKET	1
	650704	BOLT/CARRIAGE G5 3/8X1	2
	654026	WASHER/LOCK 3/8	2
	653010	NUT/HEX 3/8	2
15	654005	WASHER 3/8	AR
16	152906	ARM/IDLER	1
	650493	SCREW/CAP/HEX HD G5 3/8X2-3/4	1
	654026	WASHER/LOCK 3/8	1
	653010	NUT/HEX 3/8	1
17	152449	SPACER/IDLER ARM 1.593IN LG.	1
18	152327	PULLEY/IDLER	1
	650572	SCREW/CAP/HEX HD G5 5/8X2-3/4	1
	654012	WASHER 5/8 SAE	AR
	129311	NUT/LOCK/HEX GB 5/8	1
19	153840	SHEAVE WELD/ASSY 12-1/2OD	1
	152780	KEY/WOODRUFF 1/4X2-1/8	1
	650216	SCREW/SET/SQ HD/CUP PT. 3/8X3/4	1
	653038	NUT/JAM 3/8	1

a) This illustration reflects standard **540** RPM usage only; for **1000** RPM conversion, switch positions with Sheave Weld Assy, 12-1/2OD (Ref. 19) and also order **1000** RPM Front PTO Assembly, PTO Group.

1287 - SIDE DRIVE

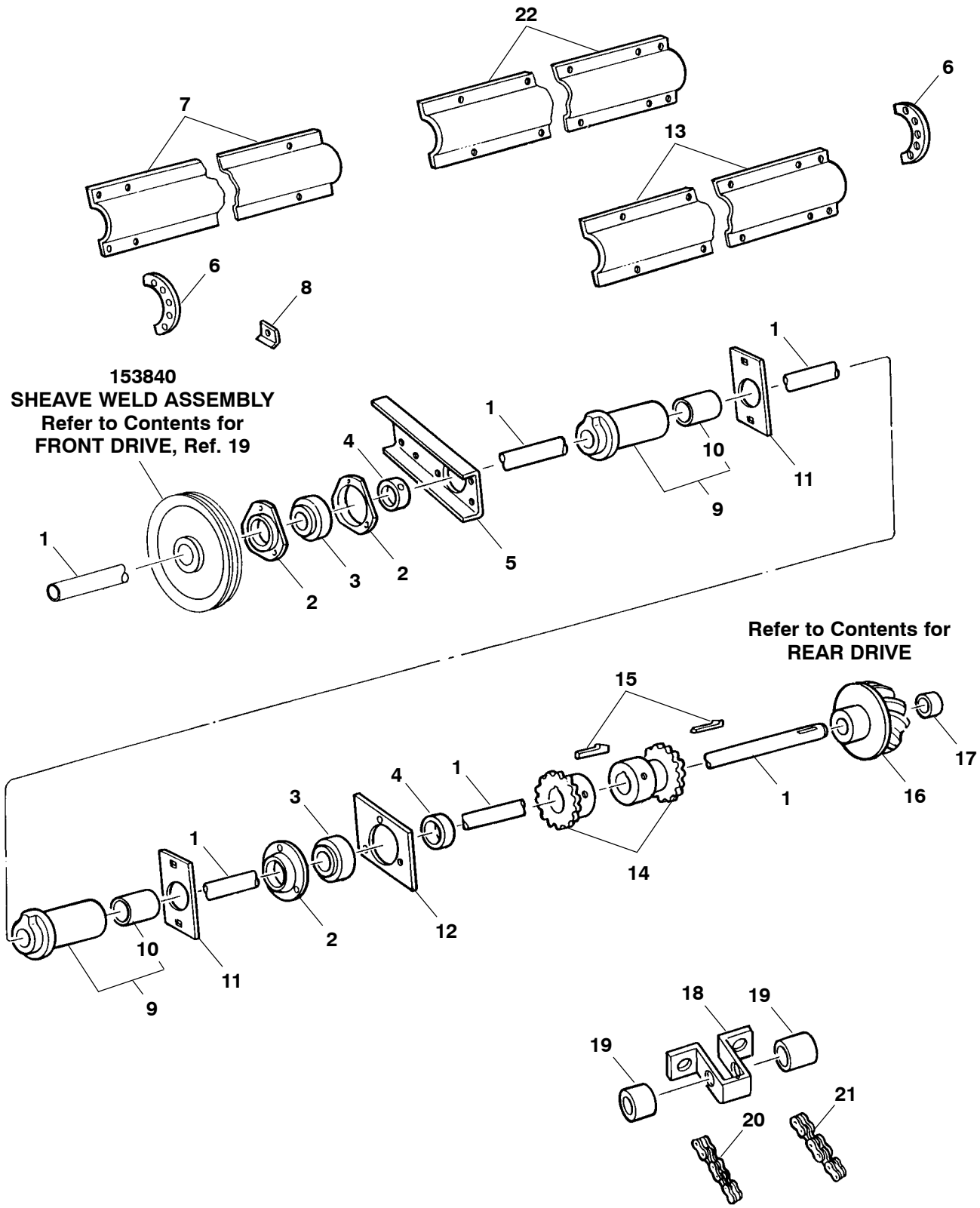

Ref. No.	Part No.	Description	Qty. Req.
01	152790	DRIVESHAFT/MAIN 198-1/4IN LG.	1
02	H7846	FLANGETTE	3
	650687	BOLT/CARRIAGE G5 5/16X3/4	2
	650781	BOLT/CARRIAGE G5 5/16X1	4
	654024	WASHER/LOCK 5/16	2
	653007	NUT/HEX 5/16	4
	210-19470	NUT/FLANGE/HEX 5/16	6
03	520063	BEARING/BALL	2
04	520084	COLLAR	2
05	152805	PLATE/MOUNTING	1
	650687	BOLT/CARRIAGE G5 5/16X3/4	1
	650781	BOLT/CARRIAGE G5 5/16X1	2
	653007	NUT/HEX 5/16	2
06	152740	BRACKET	2
	650393	SCREW/CAP/HEX HD G5 5/16X3/4	4
	210-19470	NUT/FLANGE/HEX 5/16 USR	4
07	152761	SHIELD/FRONT 50-9/16IN LG.	2
	650484	SCREW/CAP/HEX HD G5 5/16X1/2	6
	210-19470	NUT/FLANGE/HEX 5/16	6
08	153027	CLIP/BEARING	2
	650704	BOLT/CARRIAGE G5 3/8X1	2
	152991	NUT/SPECIAL	2
09	152869	BEARING/ASSY (INCL REF. 10)	2
	053894	FITTING/GREASE/SHORT 1/4-28	1
	076002	FITTING/GREASE 1/4-28 90DEG	1
10	152627	BUSHING	1
11	152585	HOLDER/BEARING	2
	650704	BOLT/CARRIAGE G5 3/8X1	2
	152991	NUT/SPECIAL	2
12	152796	FLANGETTE	1
13	152777	SHIELD/REAR 63-1/8IN LG	2
	650484	SCREW/CAP/HEX HD G5 5/16X1/2	8
	210-19470	NUT/FLANGE/HEX 5/16 USR	8
14	152743	SPROCKET WELD/ASSY/12T	2
15	152424	KEY/GIB1/4X1-1/4	2
16	152919	CLUTCH/ASSY (INCL REF. 17)	1
	152780	KEY/WOODRUFF 1/4X2-1/8	1
	076068	PIN/GROOVE/TYPE E 5/16X2	1
17	152275	BUSHING	1
18	152665	BRACKET/IDLER	1
	652059	BOLT/CARRIAGE G5 3/8X2-1/2	2
	654005	WASHER 3/8	5
	654026	WASHER/LOCK 3/8	2
	653010	NUT/HEX 3/8	2
19	152428	GUIDE/CHAIN	2
	082231	BOLT/CARRIAGE G5 3/8X2-1/4	2
	654026	WASHER/LOCK 3/8	2
	653010	NUT/HEX 3/8	2
20	152413	CHAIN/ASSY/FRONT DRIVE/RC #40 48 TOTAL PITCHES	1
	500036	LINK/ROLLER	47
	500037	LINK/CONNECTOR	1
21	152375	CHAIN/ASSY/REAR DRIVE/RC #40 61 TOTAL PITCHES	1
22	152731	SHIELD/MIDDLE 61-1/2IN LG.	2
	650484	SCREW/CAP/HEX HD G5 5/16X1/2	8
	210-19470	NUT/FLANGE/HEX 5/16 USR	8

1287 - STANDARD APRON DRIVE - REAR DRIVE

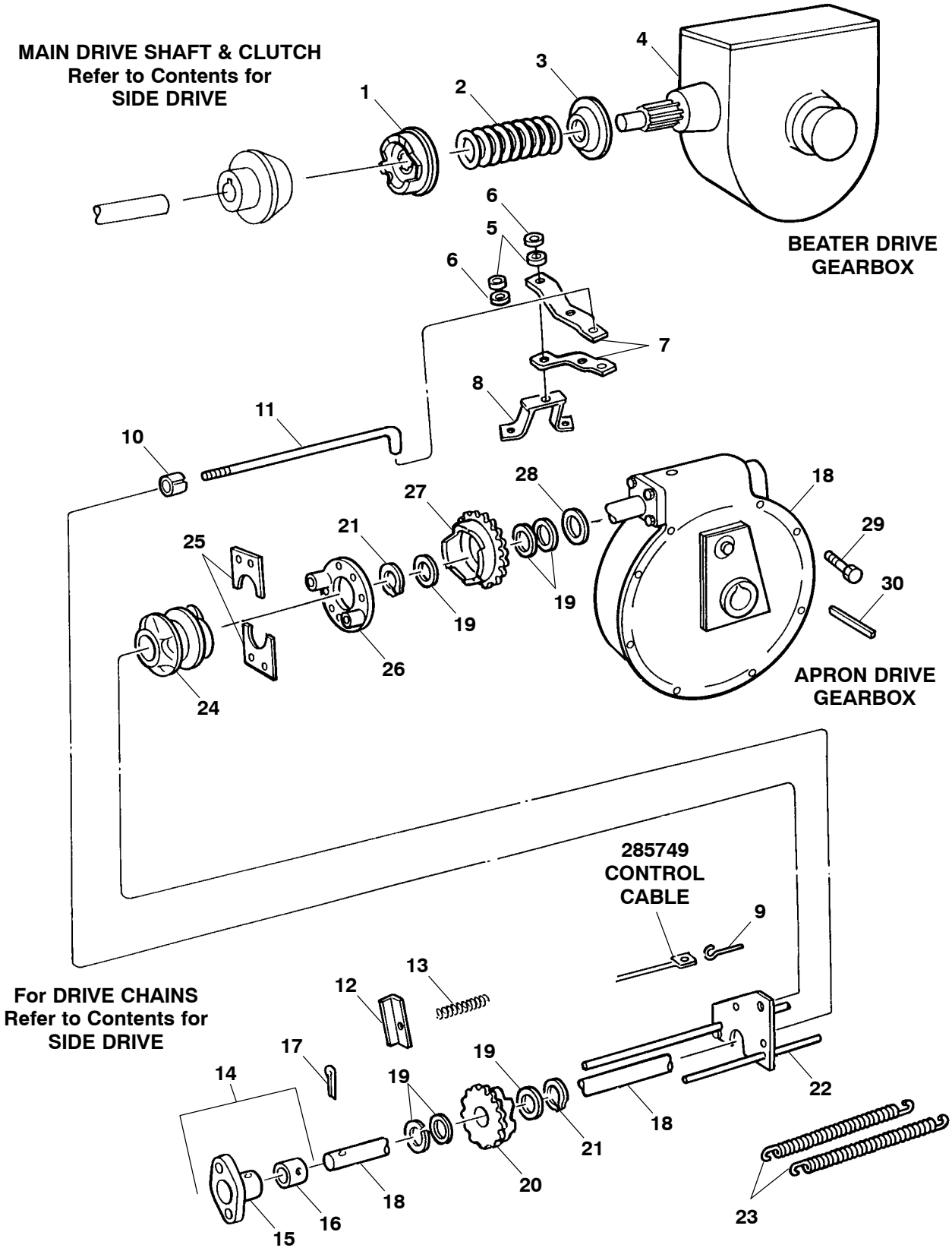

Ref. No.	Part No.	Description	Qty. Req.
01	152890	CLUTCH/HALF	1
	053894	FITTING/LUBE/SHORT 1/4-28	1
02	152348	SPRING 2-1/4IN FREE LENGTH	1
03	152629	WASHER/SPECIAL	1
04	152944[a]	BEATER DRIVE GEARBOX/ASSY	1
	650453	SCREW/CAP/HEX HD G5 1/2X1-1/2	4
	654030	WASHER/LOCK 1/2	4
	653018	NUT/HEX G5 1/2	4
05	152309	SPACER .348 X .277ID X 3/8OD	2
06	152461	ROLLER	2
	650946	SCREW/MACHINE/TRUSS HD 1/4X1	2
	654022	WASHER/LOCK 1/4	2
	653005	NUT/HEX 1/4	2
07	152684	YOKE	2
	650491	SCREW/CAP/HEX HD G5 3/8X1-1/4	1
	152689	BUSHING	1
	071703	NUT/LOCK GC 3/8	1
08	152842	SUPPORT WELD/ASSY	1
	650704	BOLT/CARRIAGE G5 3/8X1	2
	152991	NUT/SPECIAL	2
09	152299	EYEBOLT	1
	152991	NUT/SPECIAL	2
10	152308	SPACER/SPLIT	1
11	152430	CONTROL ROD 13-1/4IN LG.	1
	655016	PIN/COTTER 3/16X1	1
	654009	WASHER 1/2	3
	653018	NUT/HEX G5 1/2	2
12	153069	BRACKET	1
	650790	BOLT/CARRIAGE G5 3/8X3/4	2
	652146	BOLT/CARRIAGE G5 7/16X1-1/2	1
	654028	WASHER/LOCK 7/16	1
	152991	NUT/SPECIAL	1
	653015	NUT/HEX G5 7/16	1
13	152739	SPRING/COMPRESSION 15IN FREE LENGTH	1
14	152814	BEARING/ASSY (INCL REF. 15, 16 & LUBE FITTING)	1
	053894	FITTING/LUBE 1/4-28	1
	650704	BOLT/CARRIAGE G5 3/8X1	2
	152991	NUT/SPECIAL	2
15	NS	HOUSING/BEARING	1
16	152421[b]	BUSHING	1
17	655028	PIN/COTTER 1/4X1-1/2	1
18	152956[c]	APRON DRIVE GEARBOX/ASSY	1
	650569	SCREW/CAP/HEX HD G5 1/2X1-3/4	2
	654030	WASHER/LOCK 1/2	2
	653018	NUT/HEX GC 1/2	2
19	152283	WASHER 16 GAUGE 1-1/64ID X 1-9/16OD	AR
20	152846	SPROCKET WELD/ASSY/23T	1
	053894	FITTING/LUBE/SHORT 1/4-29	1
21	045026	RING/RETAINING	2
22	152744	SHIFTER WELD/ASSY	1
23	152307	SPRING 4IN FREE LENGTH	2
24	152940	CLUTCH	1
	053894	FITTING/LUBE/SHORT 1/4-29	1
25	152347	BUSHING/CLUTCH	2
	650545	SCREW/CAP/HEX HD G5 5/16X1-1/4	4
	654004	WASHER 5/16	4
	654024	WASHER/LOCK 5/16	4
	653007	NUT/HEX 5/16	4
26	152799	SHIFTER	1
	053894	FITTING/LUBE/SHORT 1/4-29	2
27	152908	SPROCKET/41T/RC #40	1
28	H8353	WASHER 1 SAE	1
29	143319[d]	SHEARBOLT KIT	1
30	152380	KEY/SQ/SPECIAL	1

a) For breakdown, see Components page titled "Beater Drive Gearbox".

b) **Important:** When replacing Bushing (Ref. 16), you must drill a hole in the Bushing for the Lube Fitting.

c) For breakdown, see Components page titled "Apron Drive Gearbox Assembly (Standard & Hydraulic Apron Drive)".

d) Shearbolt Kit includes 8 Bolts & 8 Lock Nuts.

1287 - HYDRAULIC APRON DRIVE - FLOW CONTROL VALVE

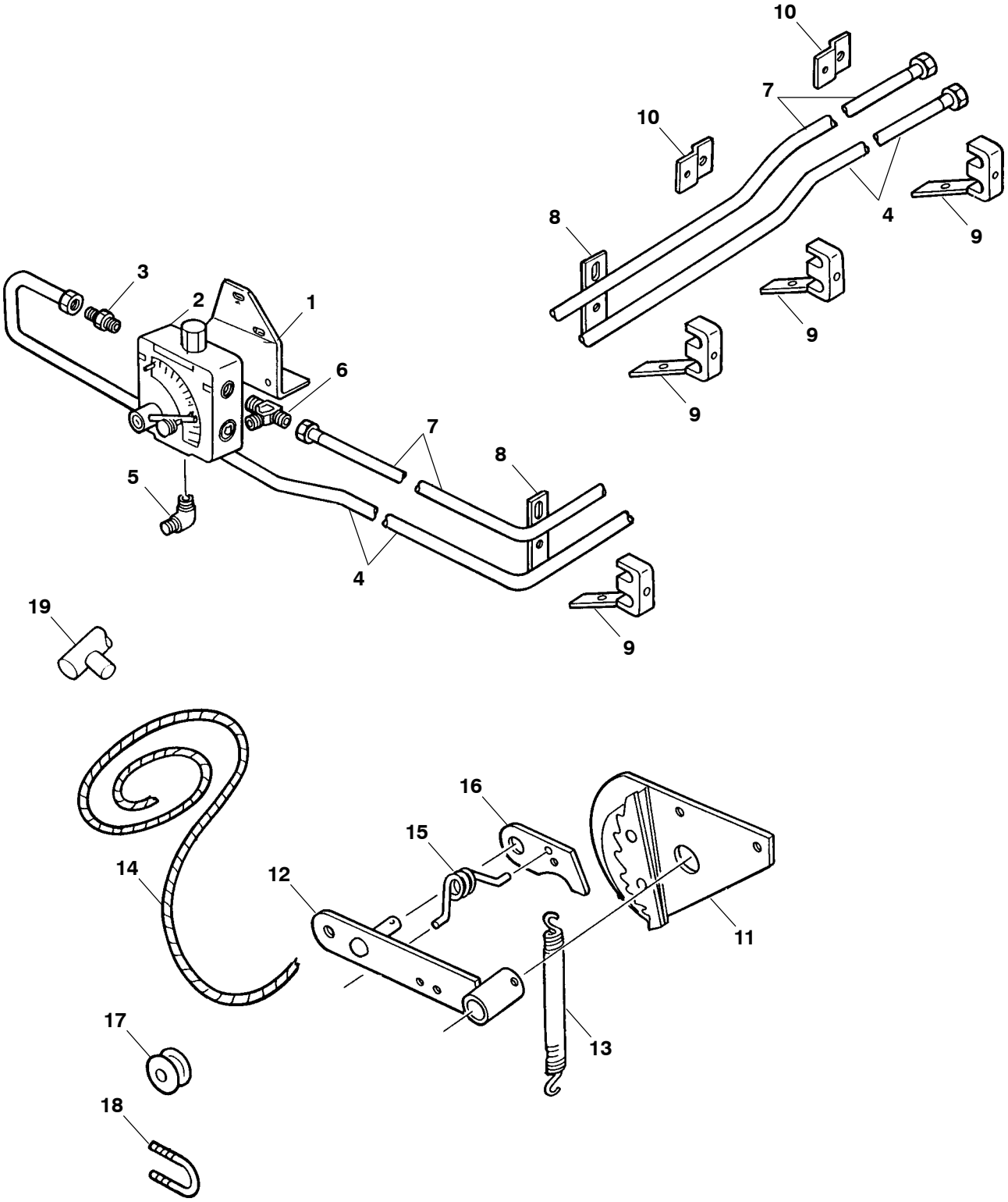

1287 - HYDRAULIC APRON DRIVE - FLOW CONTROL VALVE

Ref. No.	Part No.	Description	Qty. Req.
01	152746	BRACKET/FLOW CONTROL VALVE	1
	650687	BOLT/ROUND HD/SHORT NECK G5 5/16X3/4	2
	210-19470	NUT/FLANGE/HEX 5/16	2
02	152903[a]	FLOW CONTROL VALVE/ASSY	1
	650449	SCREW/CAP/HEX HD G5 1/4X2-1/2	2
	152690	NUT/FLANGE/HEX 1/4 USR	2
03	054850	CONNECTOR/MALE 7/8-14UNF TO 1/2NPTF	1
04	NS[b]	TUBE/ASSY 5/8OD X 182-3/4IN APPROXIMATE LENGTH	1
	152365	SLEEVE/TUBE	2
	152366	NUT/TUBE	2
05	054848	ELBOW/MALE 7/8-14UNF TO 1/2NPTF	1
06	065507	TEE/MALE RUN (2) 7/8-14UNF TO 1/2NPTF	1
07	NS[b]	TUBE/ASSY 5/8OD X 181-1/4IN APPROXIMATE LENGTH	1
	152365	SLEEVE/TUBE	2
	152366	NUT/TUBE	2
08	152606	BRACKET/TUBE CLAMP/FRONT	2
	650786	BOLT/CARRIAGE G5 3/8X1-1/4	2
	152991	NUT/SPECIAL	4
09	152454	CLAMP/TUBE (FOR 5/8OD TUBE)	4
	650588	SCREW/CAP/HEX HD G5 1/4X1-1/2	3
	654002	WASHER 1/4	3
	153011	NUT/FLANGE/HEX 1/4	3
10	152607	BRACKET/TUBE CLAMP/REAR	2
	650786	BOLT/CARRIAGE G5 3/8X1-1/4	1
	152991	NUT/SPECIAL	2
11	152817	QUADRANT WELD/ASSY	1
12	152748	LEVER WELD/ASSY	1
	650835	SCREW/CAP/HEX HD G5 1/4X1	1
	653005	NUT/HEX 1/4	2
	153001	PIN/GROOVE A 5/16X1-1/4	1
13	152887	SPRING/COMPRESSOR	1
14	152350	ROPE 1/4IN X 15FT LG.	1
15	152305	SPRING/TORSION	1
16	152355	PAWL/QUADRANT	1
	654009	WASHER SAE 1/2	1
	655006	PIN/COTTER 1/8X1	1
17	059721	GUIDE/ROPE	1
18	152288	U-BOLT	1
	650549	WASHER/LOCK #10	2
	152504	NUT/HEX #10	2
19	152325	GRIP/ROPE (OPTIONAL)	1

a) For breakdown, see Components page titled “Flow Control Valve Assembly”.

b) Not Serviced. Repair Locally.

1287 - HYDRAULIC APRON DRIVE - REAR DRIVE

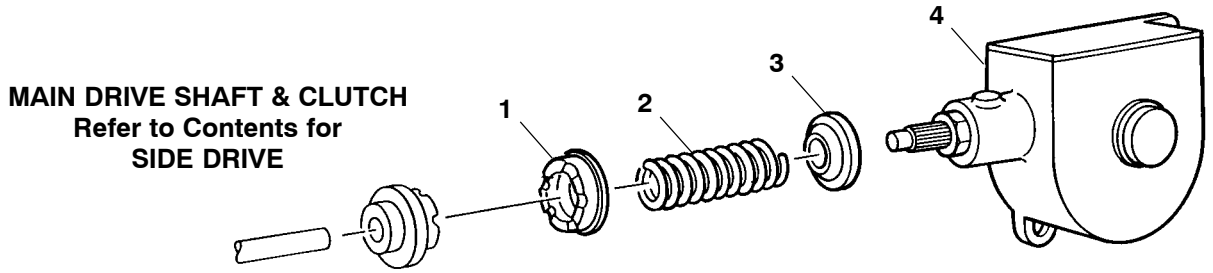

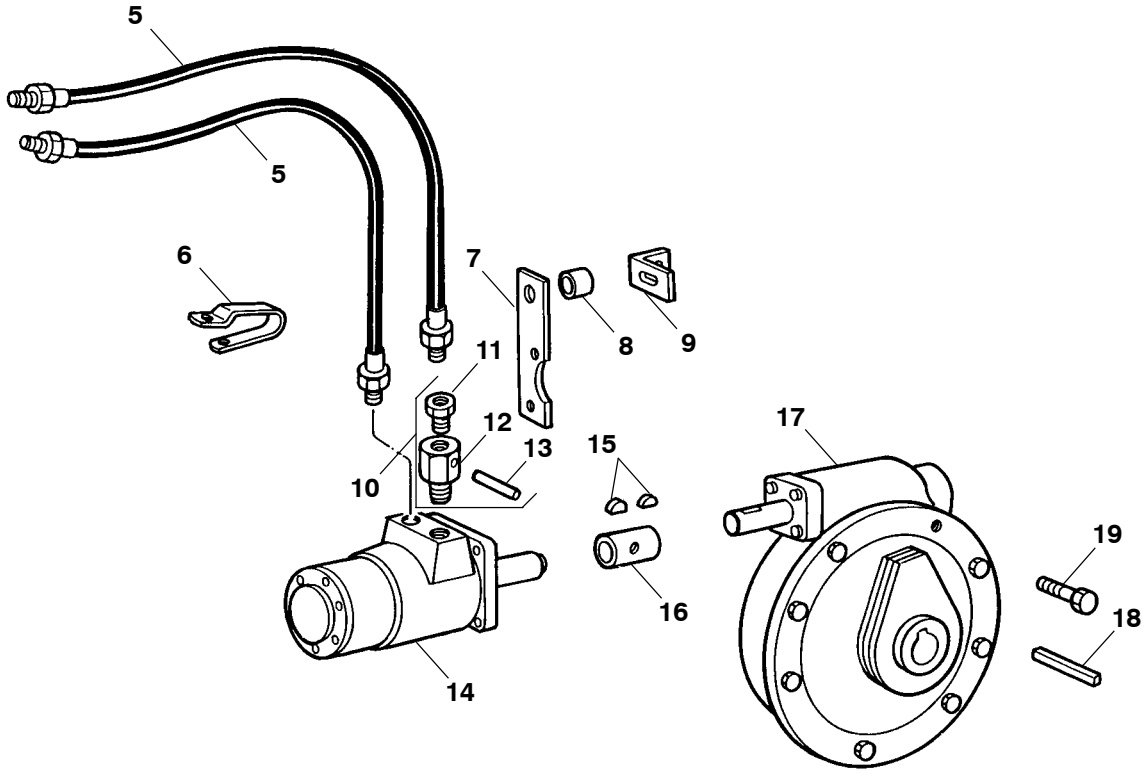

Ref. No.	Part No.	Description	Qty. Req.
01	152890	CLUTCH/HALF	1
	053894	FITTING/LUBE/SHORT 1/4-28	1
02	152348	SPRING 2-1/4IN FREE LENGTH	1
03	152629	WASHER/SPECIAL	1
04	152944[a]	BEATER DRIVE GEARBOX/ASSY	1
	650453	SCREW/CAP/HEX HD G5 1/2X1-1/2	4
	654030	WASHER/LOCK 1/2	4
	653018	NUT/HEX G5 1/2	4
05	152499	HOSE/ASSY 1/2ID X 24 LG. 1/2-14NPTF TO 7/8-14UNF MALE FITTINGS	2
06	152419	CLAMP/HOSE	1
	153056	SCREW/SELF-LOCKING HWH 5/16X1 USR	1
	210-19470	NUT/FLANGE/HEX 5/16 USR	1
07	152620	ARM/TORQUE	1
	650429	SCREW/CAP/HEX HD G5 3/8X3/4	2
	650633	SCREW/CAP/HEX HD G5 1/2X1-1/4	1
	654009	WASHER 1/2	1
	654026	WASHER/LOCK 3/8	1
	654030	WASHER/LOCK 1/2	2
	653018	NUT/HEX G5 1/2	1
08	152308	SPACER	1
09	152670	ANGLE	1
	650786	BOLT/CARRIAGE G5 3/8X1-1/4	1
	654005	WASHER 3/8	1
	654026	WASHER/LOCK 3/8	1
	653010	NUT/HEX 3/8	1
10	067457	CHECK VALVE/ASSY (INCL REF. 11-13)	1
11	152402	POPPET	1
12	NS	VALVE/BODY	1
13	152403	PIN/TAPERED	1
14	049073[b]	MOTOR/HYDRAULIC	1
15	650513	KEY/WOODRUFF 1/4X1	2
16	152716	COUPLING/SHAFT	1
	650219	SCREW/SET/SQ HD/CUP PT. 3/8X1	2
	653038	NUT/HEX/JAM 3/8	2
17	152957[c]	APRON DRIVE WORM BOX/ASSY	1
	650569	SCREW/CAP/HEX HD G5 1/2X1-3/4	2
	654030	WASHER/LOCK 1/2	2
	653018	NUT/HEX GC 1/2	2
18	152380	KEY/SQ/SPECIAL	1
19	143319[d]	SHEARBOLT KIT	1

a) For breakdown, see Components page titled "Beater Drive Gearbox".

b) For breakdown, see the two following pages.

c) For breakdown, see Components page titled "Apron Drive Gearbox Assembly (Standard & Hydraulic Apron Drive)".

d) Shear Bolt Kit 143319 contains 8 Shear Bolts and 8 Lock Nuts.

1287 - APRON DRIVE HYDRAULIC MOTOR

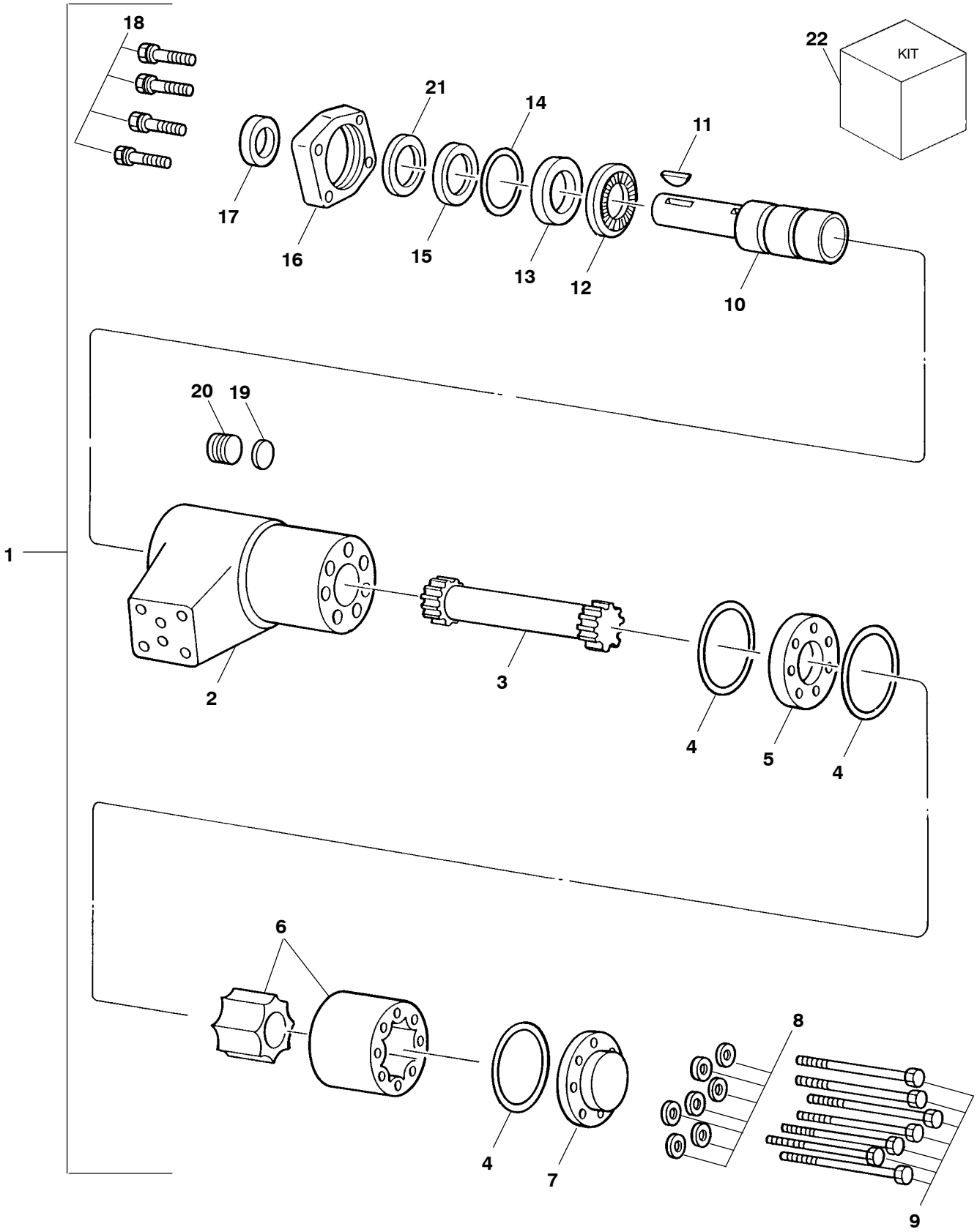

Ref. No.	Part No.	Description	Qty. Req.
01	049073	MOTOR/HYDRAULIC	1
02	152674	KIT/HOUSING (INCL REF. 19 & 20)	1
03	152396	DRIVE	1
04	NS[b]	O-RING	3
05	152712	PLATE	1
06	144001	GEROTOR/ASSY	1
07	152711	PLATE/END	1
08	NS[b]	WASHER	7
09	153010	SCREW/CAP	7
10	152616	SHAFT/OUTPUT	1
11	650513	KEY/WOODRUFF 1/4X1	1
12	152754	BEARING	1
13	049498	RACE/BEARING	1
14	NS[ab]	O-RING	1
15	NS[ab]	SEAL	1
16	152673	KIT/MOUNTING FLANGE (INCL REF. 14, 15, 17, 21 & MOUNTING FLANGE)	1
17	NS[ab]	SEAL/OIL	1
18	650371	SCREW/CAP	4
19	NS[b]	O-RING	1
20	152468	PLUG	1
21	NS[ab]	RING/BACK-UP	1
22	152675	KIT/SEAL (INCL REF. 4, 8, 14, 15, 17, 19, & 21)	1

a) Component of Mounting Flange Kit (Ref. 16).

b) Component of Seal Kit (Ref. 22).

1287 - BEATER DRIVE GEARBOX

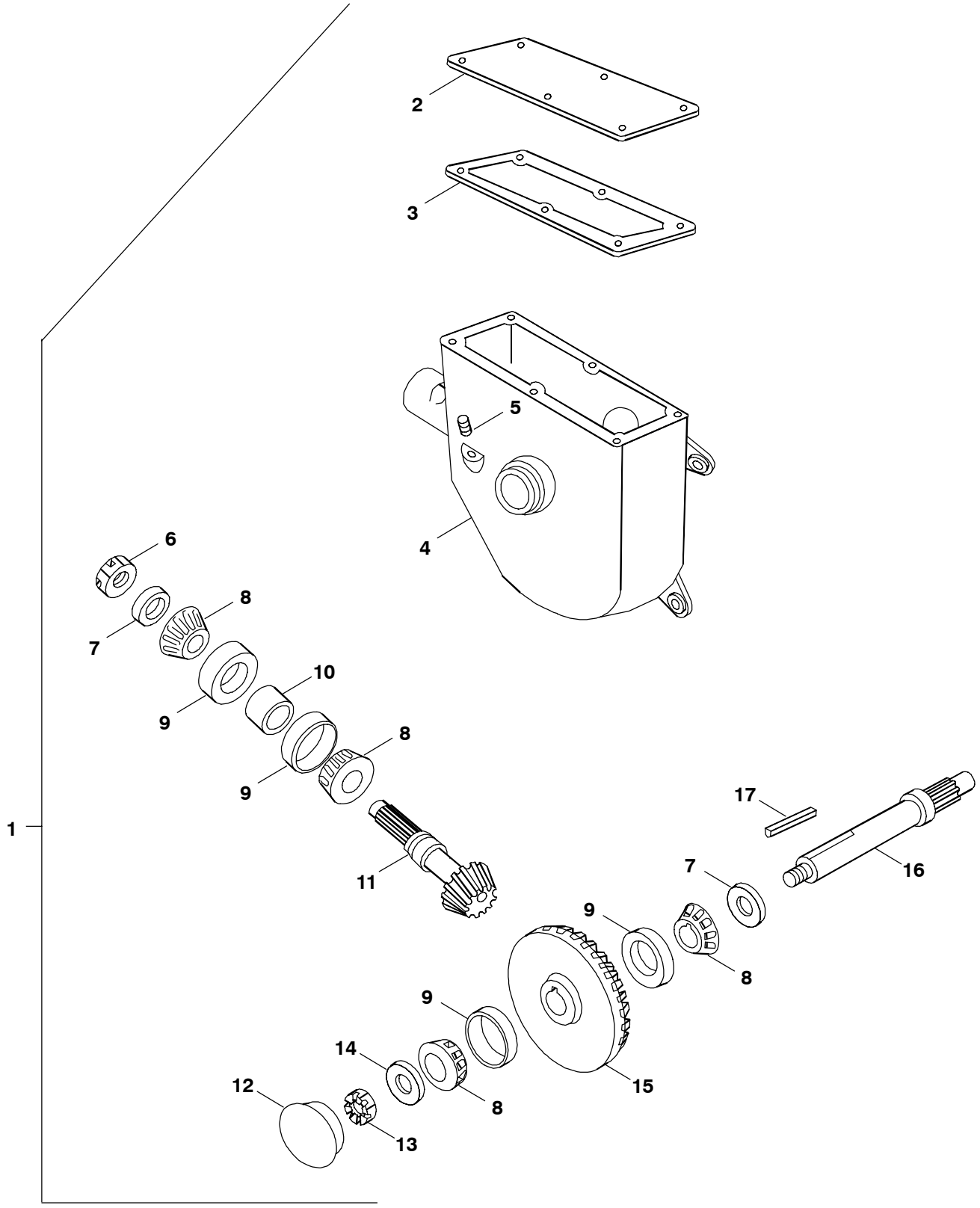

Ref. No.	Part No.	Description	Qty. Req.
01	152944	GEARBOX/BEATER DRIVE	1
02	152644	COVER	1
	650484	SCREW/CAP/HEX HD G5 5/16X1/2	6
03	NS	SILICONE RUBBER SEALANT	AR
04	152942	HOUSING/GEARBOX	1
	152838	SCREW/SET/SQ HD/CUP PT. 1/2X1-1/4	1
	653044	NUT/HEX/JAM 1/2	1
05	660065	PLUG/PIPE/SQ HD 3/8	1
06	152681	NUT/HEX/SLOTTED	1
	655014	PIN/COTTER 1/8X2	1
07	152352	SEAL/OIL	2
08	152988	CONE/BEARING	4
09	152349	CUP/BEARING	4
10	152677	SPACER	1
11	152943	PINION & SHAFT	1
12	152373	CAP/DUST	1
13	152330	NUT/HEX/SLOTTED	1
	655008	PIN/COTTER 1/8X1-1/4	1
14	152318	WASHER	1
15	152893	GEAR/BEVEL	1
16	152718	OUTPUT SHAFT & COLLAR	1
17	180-20637	KEY/HARDENED	1

1287 - FLOW CONTROL VALVE

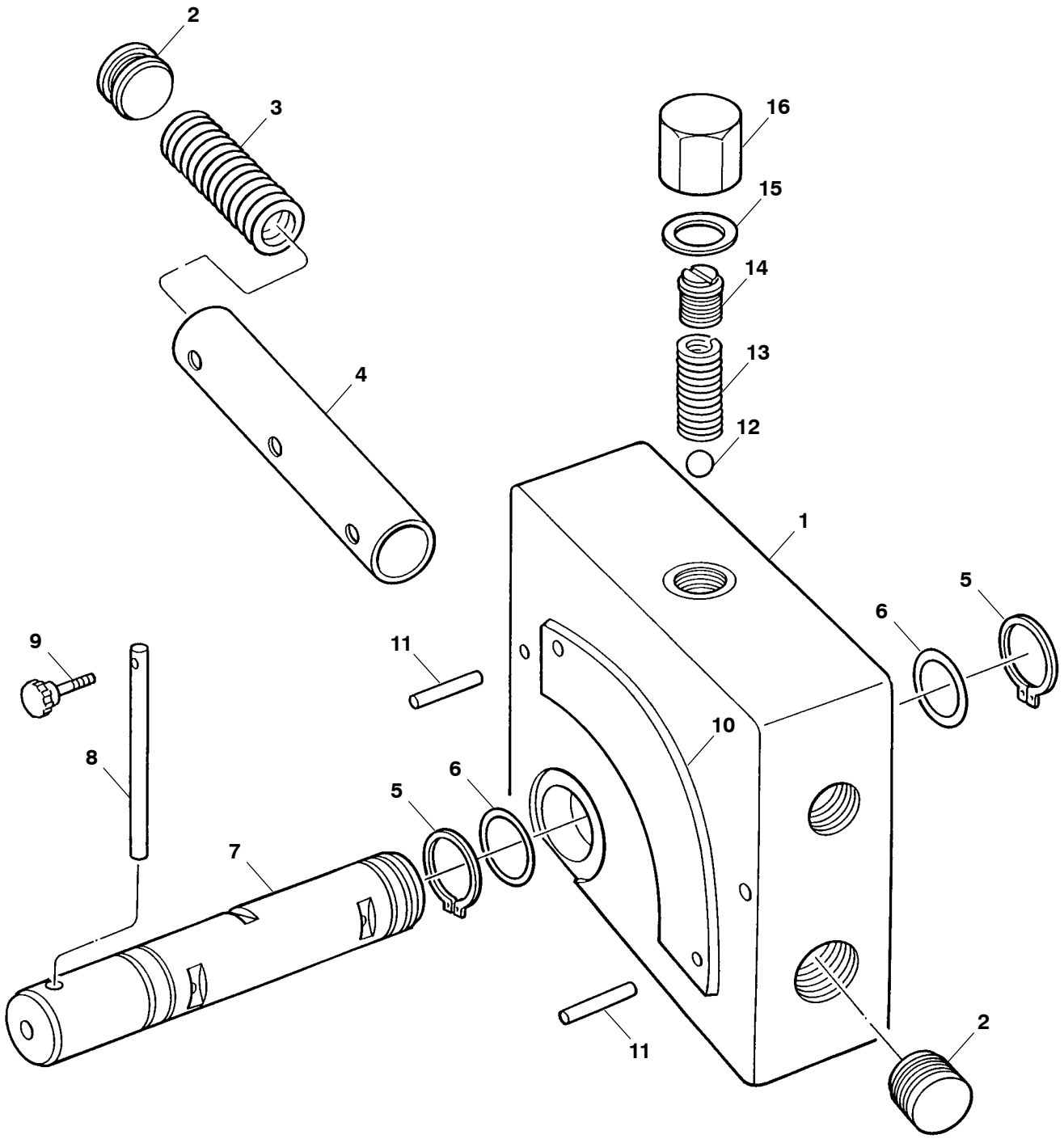

Ref. No.	Part No.	Description	Qty. Req.
01	152903	VALVE/FLOW CONTROL (INCL REF. 02-16)	1
02	152378	PLUG/PIPE 3/4NPT	2
03	152384	SPRING/METERING	1
04	152584	SPOOL/METERING	1
05	152611	RING/SNAP	2
06	152574	O-RING	2
07	152426	SPOOL/LEVER/SIDE	1
08	152583	HANDLE	1
09	152612	SCREW/THUMB	1
10	152613	PLATE/DIAL	1
11	051569	PIN/ROLL 3/16X7/8	2
12	603761	BALL	1
13	152995	SPRING/RELIEF	1
14	152994	SCREW/ADJUSTING	1
15	152385	WASHER/ALUMINUM	1
16	152993	NUT/ACORN 3/4-16	1

1287 - APRON DRIVE GEARBOX (STANDARD & HYDRAULIC APRON DRIVE)

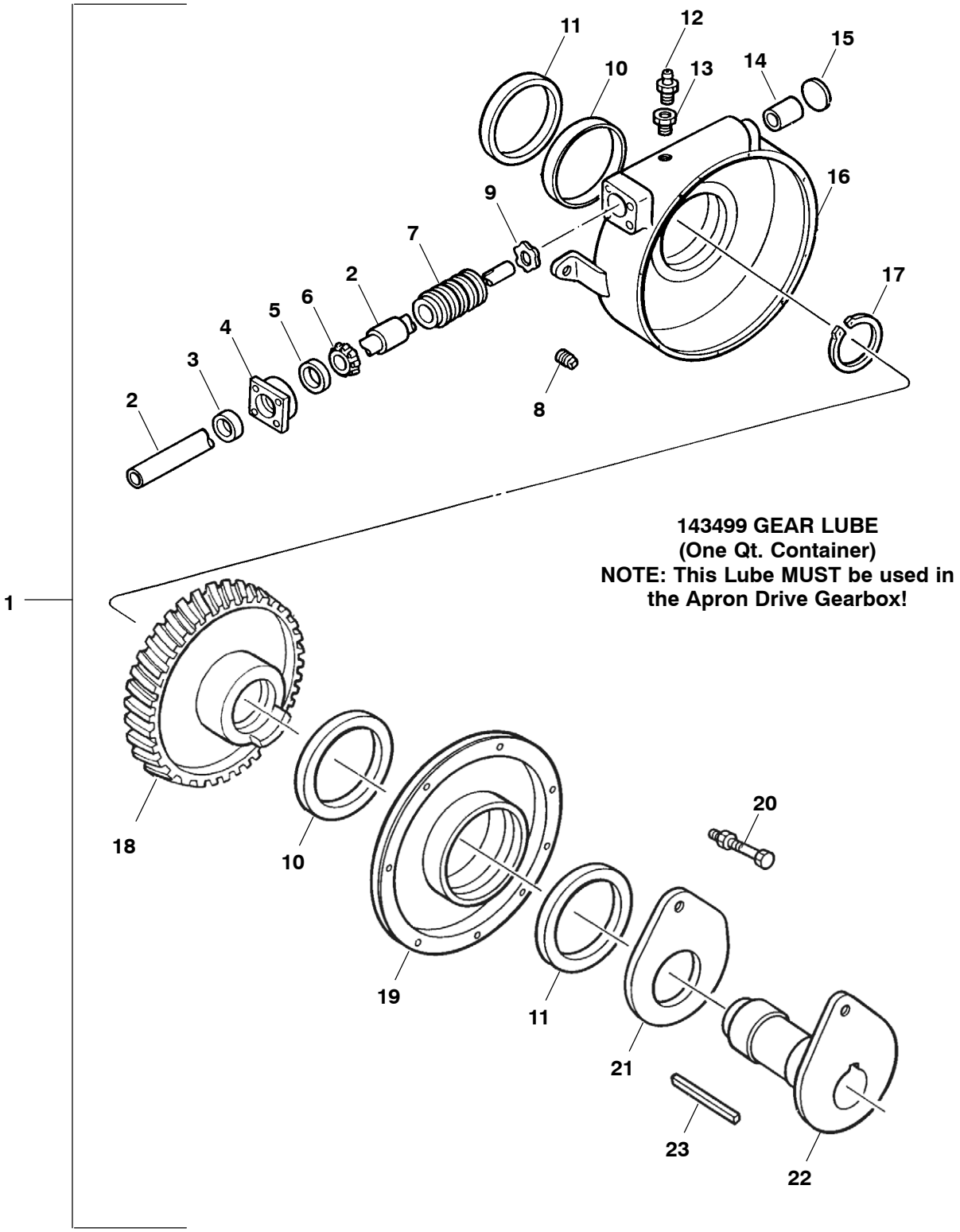

1287 - APRON DRIVE GEARBOX (STANDARD & HYDRAULIC APRON DRIVE)

Ref. No.	Part No.	Description	Qty. Req.
01	152956	STANDARD DRIVE/APRON GEARBOX/ASSY (INCL REF. 02-22)	
	152957	HYDRAULIC DRIVE/APRON GEARBOX/ASSY (INCL REF. 02-22)	
02	152706	INPUT SHAFT & COLLAR/ASSY STANDARD DRIVE (COLLAR IS NON-SERVICEABLE)	1
	152621	INPUT SHAFT & COLLAR/ASSY HYDRAULIC DRIVE (COLLAR IS NON-SERVICEABLE)	1
03	152481	SEAL/OIL	1
04	152794	CAP/END	1
	650393	SCREW/CAP/HEX HD G5 5/16X3/4	4
	654024	WASHER/LOCK 5/16	4
05	520033	CUP/BEARING	1
06	520032	CONE/BEARING	1
07	152815	WORM	1
08	660000	PLUG/CHECK 1/8NPT	1
09	152457	SPRING/WAVE	1
10	152406	BUSHING	2
11	152496	SEAL/OIL	2
12	152312	BREATHER	1
13	152032	BUSHING/HEX/REDUCING 3/8X1/8	1
14	152421	BUSHING	1
15	152379	PLUG/EXPANSION 1-1/4IN	1
16	153058	HOUSING/ASSY (INCL 1 OF REF. 10)	1
17	051909	RING/RETAINING	1
18	152531	GEAR/WORM	1
19	152519	COVER/ASSY (INCL 1 OF REF. 10)	1
	650393	SCREW/CAP/HEX HD G5 5/16X3/4	8
	654024	WASHER/LOCK 5/16	8
20	143319[a]	SHEARBOLT KIT	1
21	152909	SHEAR PLATE WELD/ASSY	1
22	152864	SHEAR HUB & PLATE WELD/ASSY	1
23	152380	KEY/SQ 3/8X6	1

a) Shear Bolt Kit 143319 contains 8 Shear Bolts and 8 Lock Nuts.

1287 - ENDGATE, SIDES, & SHIELDS

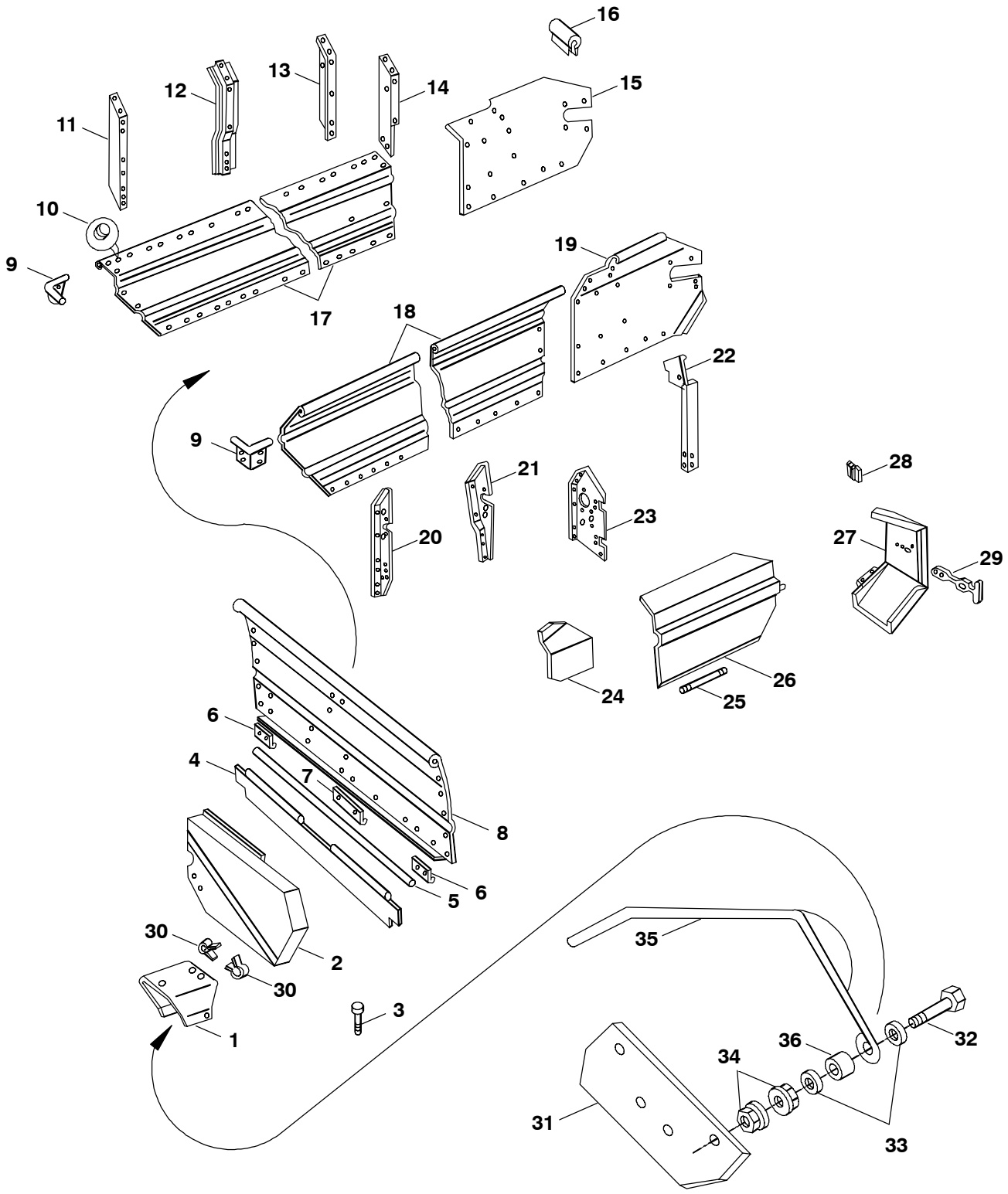

Ref. No.	Part No.	Description	Qty. Req.
01	152776	SHIELD/PTO	1
	650429	SCREW/CAP/HEX HD G5 3/8X3/4	4
	152991	NUT/SPECIAL	4
02	152849	SHIELD WELD/ASSY/FRONT	1
	152440	NUT/WING	1
	654005	WASHER 3/8	1
03	650536	SCREW/CAP/HEX HD G5 5/16X6	1
	071701	NUT/LOCK/HEX GB 5/16	1
04	152894	SEAL/ENDGATE	1
05	152678	PIN/HINGE	1
06	152635	HINGE/OUTER SEAL	2
	650429	SCREW/CAP/HEX HD G5 3/8X3/4	2
	152991	NUT/SPECIAL	2
07	152636	HINGE/INNER SEAL	1
	650429	SCREW/CAP/HEX HD G5 3/8X3/4	2
	654005	WASHER 3/8	2
	152991	NUT/SPECIAL	2
08	153050	ENDGATE/FRONT	1
	143005	SIGN/DANGER	1
	650754	BOLT/ROUND HD/SHORT NECK G5 5/16X1/2	7
	650393	SCREW/CAP/HEX HD G5 5/16X1	2
	651110	SCREW/CAP/HEX HD G5 3/8X1	2
	210-19470	NUT/FLANGE/HEX 5/16 USR	7
	152991	NUT/SPECIAL	6
09	152910	CORNER	2
	650704	BOLT/CARRIAGE G5 3/8X1	6
	651323	BOLT/ROUND HD/SHORT NECK G5 3/8X2-3/4	4
	654005	WASHER 3/8	10
	654026	WASHER/LOCK 3/8	10
	653010	NUT/HEX 3/8	10
10	152436	PLUG/SNAP-ON	AR
11	152912	BRACE/FRONT SIDE/RH	1
	650790	BOLT/CARRIAGE G5 3/8X3/4	4
	153039	SCREW/CAP/HEX HD G5 7/16X1	2
	652146	SCREW/CAP/HEX HD G5 7/16X1-1/2	1
	654009	WASHER	2
	654028	WASHER/LOCK 7/16	3
	152991	NUT/SPECIAL	4
	653015	NUT/HEX 7/16	3
12	152847	SUPPORT/RH	1
	650790	BOLT/CARRIAGE G5 3/8X3/4	4
	651110	SCREW/CAP/HEX HD G5 3/8X1	2
	652146	BOLT/CARRIAGE G5 7/16X1-1/2	1
	654028	WASHER/LOCK 7/16	1
	152991	NUT/SPECIAL	6
	653015	NUT/HEX G5 7/16	1
13	152837	BRACE/INTERMEDIATE SIDE/RH	1
14	152860	BRACE/REAR SIDE/RH	1
	650790	BOLT/CARRIAGE G5 3/8X3/4	4
	650494	SCREW/CAP/HEX HD G5 1/2X1	1
	152324	WASHER/HARDENED	1
	152991	NUT/SPECIAL	4
	653018	NUT/HEX 1/2	1
15	152945	SUPPORT/BEATER/RH	1
	650790	BOLT/CARRIAGE G5 3/8X3/4	4
	652146	SCREW/CAP/HEX HD G5 7/16X1-1/2	1
	654028	WASHER/LOCK 7/16	4
	152991	NUT/SPECIAL	4
	653015	NUT/HEX 7/16	1
16	152784	SHIELD/BEATER SHAFT	1
	652057	BOLT/CARRIAGE G5 5/16X2	1
	654004	WASHER 5/16	1
	152997	NUT/HEX G8 3/8	1
17	152974	SHEET/SIDE/RH	1
	650790	BOLT/CARRIAGE G5 3/8X3/4	3
	153054	BOLT/CARRIAGE G5 7/16X1	10
	654028	WASHER/LOCK 7/16	10
	152991	NUT/SPECIAL	3
	653015	NUT/HEX 7/16	10
18	152975	SHEET/SIDE/LH	1
	650790	BOLT/CARRIAGE G5 3/8X3/4	3
	153054	BOLT/CARRIAGE G5 7/16X1	10
	654028	WASHER/LOCK 7/16	10
	152991	NUT/SPECIAL	3
	653015	NUT/HEX 7/16	10
19	152953	SUPPORT/BEATER/LH	1
	650790	BOLT/CARRIAGE G5 3/8X3/4	4
	652146	SCREW/CAP/HEX HD G5 7/16X1-1/2	1
	654028	WASHER/LOCK 7/16	1
	152991	NUT/SPECIAL	4
	653015	NUT/HEX 7/16	1

1287 - ENDGATE, SIDES, & SHIELDS

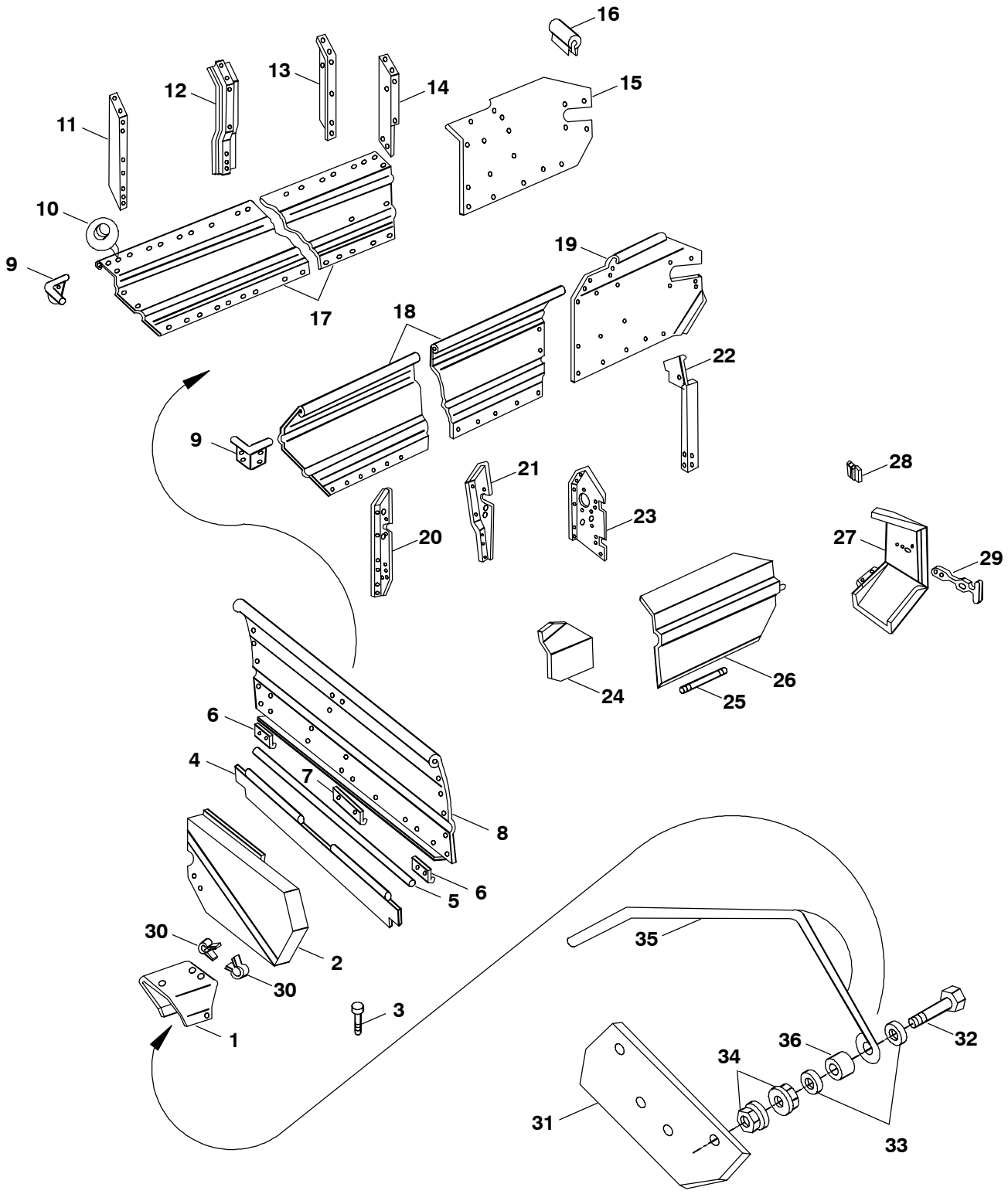

Ref. No.	Part No.	Description	Qty. Req.
20	152917	BRACE/FRONT SIDE/LH	1
	650790	BOLT/CARRIAGE G5 3/8X3/4	4
	153039	SCREW/CAP/HEX HD G5 7/16X1	2
	652146	SCREW/CAP/HEX HD G5 7/16X1-1/2	1
	654009	WASHER	2
	654028	WASHER/LOCK 7/16	3
	152991	NUT/SPECIAL	4
	653015	NUT/HEX 7/16	3
21	152866	BRACE/REAR SIDE/LH	1
	650790	BOLT/CARRIAGE G5 3/8X3/4	4
	651110	SCREW/CAP/HEX HD G5 3/8X1	2
	652146	SCREW/CAP/HEX HD G5 7/16X1-1/2	1
	654028	WASHER/LOCK 7/16	1
	152991	NUT/SPECIAL	6
	653015	NUT/HEX G5 7/16	1
22	152863	BRACE/REAR SIDE/LH	1
	650790	BOLT/CARRIAGE G5 3/8X3/4	2
	152991	NUT/SPECIAL	2
23	152900[a]	BRACE/INTERMEDIATE SIDE/LH	1
	153029[b]	BRACE/INTERMEDIATE SIDE/LH	1
	650790	BOLT/CARRIAGE G5 3/8X3/4	4
	651110	SCREW/CAP/HEX HD G5 3/8X1	1
	651028	BOLT/CARRIAGE G5 7/16X1-1/4	1
	654028	WASHER/LOCK 7/16	1
	152991	NUT/SPECIAL	5
	653015	NUT/HEX 7/16	1
24	152843[a]	SHIELD	1
	152451	SCREW/SELF-TAPPING HWH 3/8X3/4	1
	650790	BOLT/CARRIAGE G5 3/8X3/4	1
	152991	NUT/SPECIAL	1
25	152586	ROD/BRACING	1
	653018	NUT/HEX G5 1/2	4
26	153028	DOOR WELD/ASSY	1
	650393	SCREW/CAP/HEX HD G5 5/16X3/4	2
	071701	NUT/LOCK/HEX GC 5/16	2
27	152915	COVER/REAR	1
	650687	CB G5 5/16X3/4	4
	650393	SCREW/CAP/HEX HD G5 5/16X3/4	4
	210-19470	NUT/FLANGE/HEX 5/16	8
28	047269	SOCKET	1
	650754	CB G5 5/16X1/2	2
	210-19470	NUT/FLANGE/HEX 5/16	2
29	144000	LATCH/DOOR	1
	650835	SCREW/CAP/HEX HD G5 1/4X1	2
	152610	WASHER 1/4 SAE	2
	071700	NUT/LOCK/HEX 1/4	2
30	152427[b]	CLAMP	2
31	152516	BUMPER	1
	071703	NUT/LOCK GB PLATED 3/8	4
	651110	SCREW/CAP/HEX HD G5 3/8X1	4
	654005	WASHER/PLATED 3/8	4
32	651023	SCREW/CAP/HEX HD G5 PLATED 3/8X2	1
33	152360	SPACER	2
34	152991	NUT/SPECIAL	2
35	152517	HANGER	1
36	152374	SPACER	1

a) Standard Apron Drive only.

b) Hydraulic Apron Drive only.

c) Shear Bolt Kit 143319 includes 8 Shear Bolts & 8 Lock Nuts.

1287 - BEATER ASSEMBLY

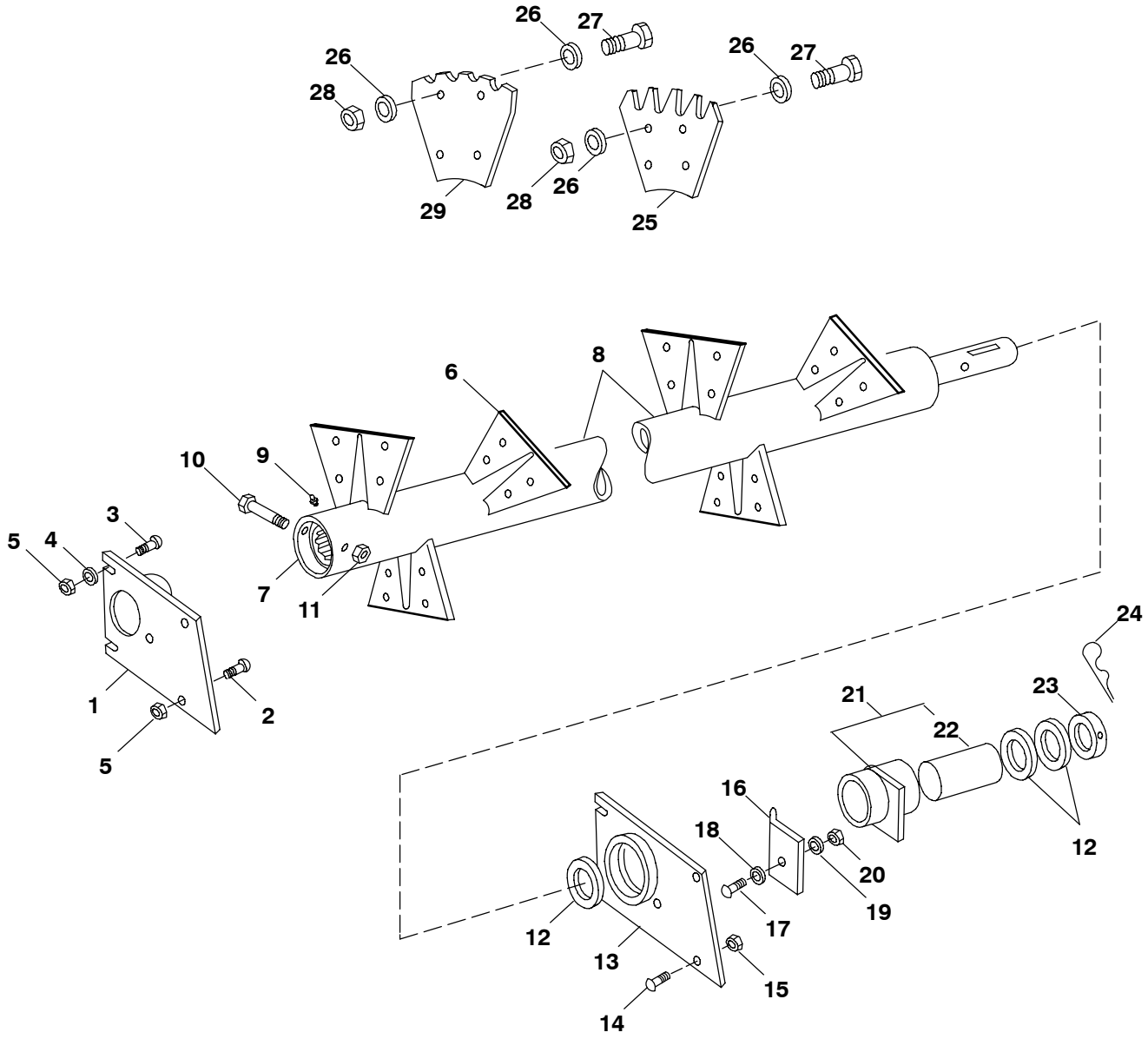

Ref. No.	Part No.	Description	Qty. Req.
01	152853	BEATER SUPPORT WELD/ASSY/LH	1
02	650704	BOLT/CARRIAGE G5 3/8X1	3
03	650786	BOLT/CARRIAGE G5 3/8X1-1/4	1
04	152389	WASHER/HARDENED	2
05	152991	NUT/SPECIAL	4
06	144361	PADDLE/WELD LH (WELD-ON)	6
	144362	PADDLE/WELD RH (WELD-ON)	6
07	152819	HUB WELD/ASSY (WELD-ON)	1
08	152954	BEATER WELD/ASSY (INCL REF. 06, 07)	1
09	152477	FITTING/LUBE 1/8NPT 30DEG 1-3/32IN LG.	1
10	152372	SCREW/CAP/HEX HD G5 3/8X4	1
11	071703	NUT/LOCK 3/8	1
12	152278	WASHER/HEAT TREATED	AR
13	152737	BEARING SUPPORT WELD/ASSY/RH	1
14	650704	BOLT/CARRIAGE G5 3/8X1	4
15	152991	NUT/SPECIAL	4
16	153027	CLIP/SUPPORT BEARING	1
17	650704	BOLT/CARRIAGE G5 3/8X1	1
18	654004	WASHER 3/8 SAE	1
19	654026	WASHER/LOCK 3/8	1
20	653010	NUT/HEX 3/8	1
21	152751	BEARING/ASSY/BEATER (INCL REF. 22)	1
22	152749	BUSHING	1
23	152624	COLLAR	1
24	065054	PIN/SPRING 1/4X2	1
25	152788	PADDLE/BEATER (BOLT-ON)	12
26	152324	WASHER	48
27	153004	SCREW/CAP/HEX HD G8 P 1/2X1-1/4	24
28	153041	NUT G8 P 1/2	24
29	152896	PADDLE/BEATER/CUPPED (OPTIONAL)	AR

1287 - SPLASH GUARD

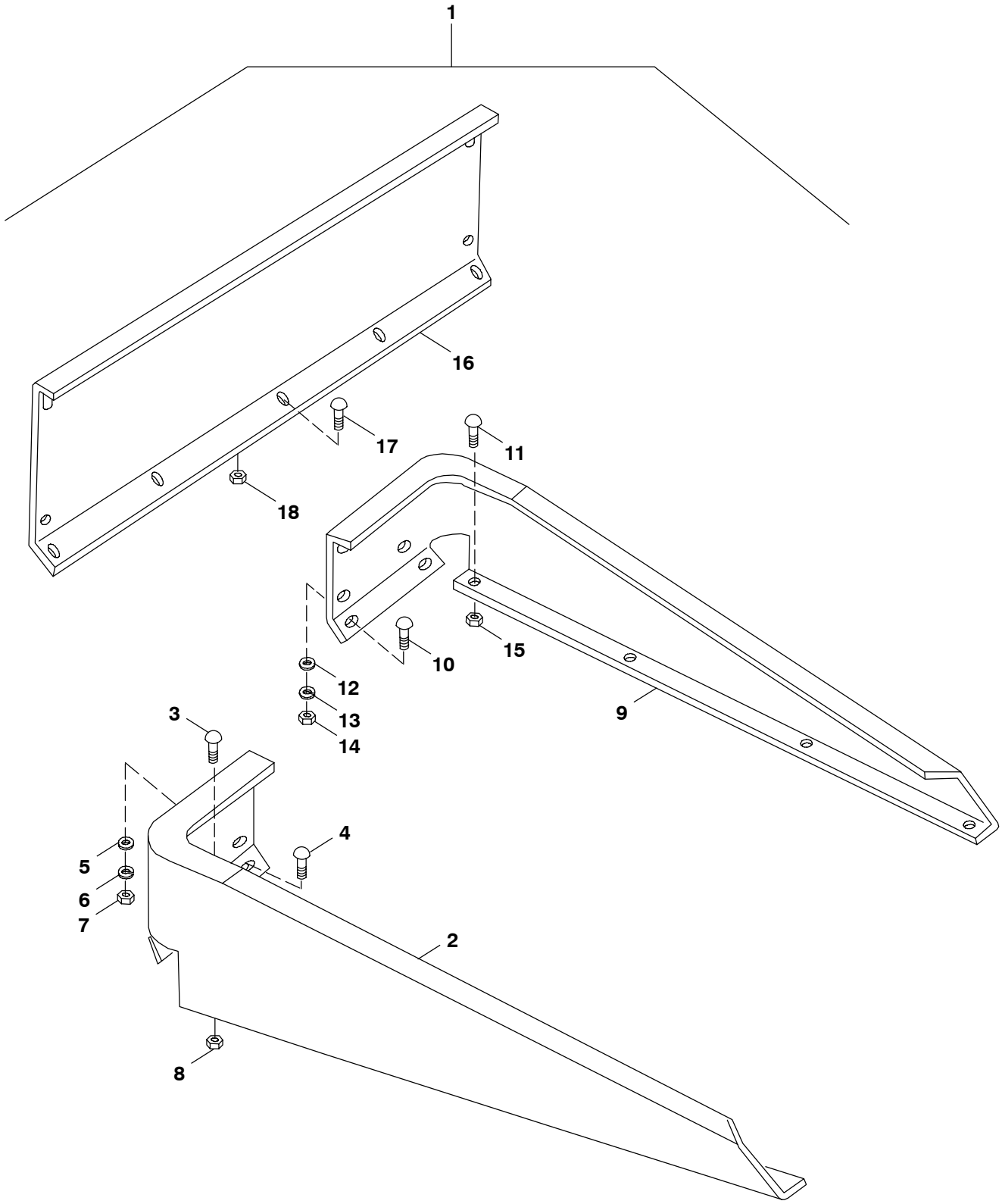

Ref. No.	Part No.	Description	Qty. Req.
01	NS[a]	BUNDLE/SPLASH GUARD	AR
02	152858	GUARD/SPLASH/LH	1
03	651066	BOLT/ROUND HD/SHORT SQ NECK G5 3/8X3/4	6
04	650704	BOLT/ROUND HD/SHORT SQ NECK G5 3/8X1	2
05	654005	WASHER 3/8	2
06	654026	WASHER/LOCK 3/8	2
07	653010	NUT/HEX 3/8	2
08	152991	NUT/SPECIAL	6
09	152859	GUARD/SPLASH/RH	1
10	651066	BOLT/ROUND HD/SHORT SQ NECK G5 3/8X3/4	6
11	650704	BOLT/ROUND HD/SHORT SQ NECK G5 3/8X1	2
12	654005	WASHER 3/8	2
13	654026	WASHER/LOCK 3/8	2
14	653010	NUT/HEX 3/8	2
15	152991	NUT/SPECIAL	6
16	152786	GUARD/SPLASH/FRONT	1
17	651066	BOLT/ROUND HD/SHORT SQ NECK G5 3/8X3/4	3
18	152991	NUT/SPECIAL	3

a) Ref. Nos. 02-17 are components of the Splash Guard Bundle; the complete bundle is not a service part and must be ordered through Sales Department.

1287 - UPPER BEATER

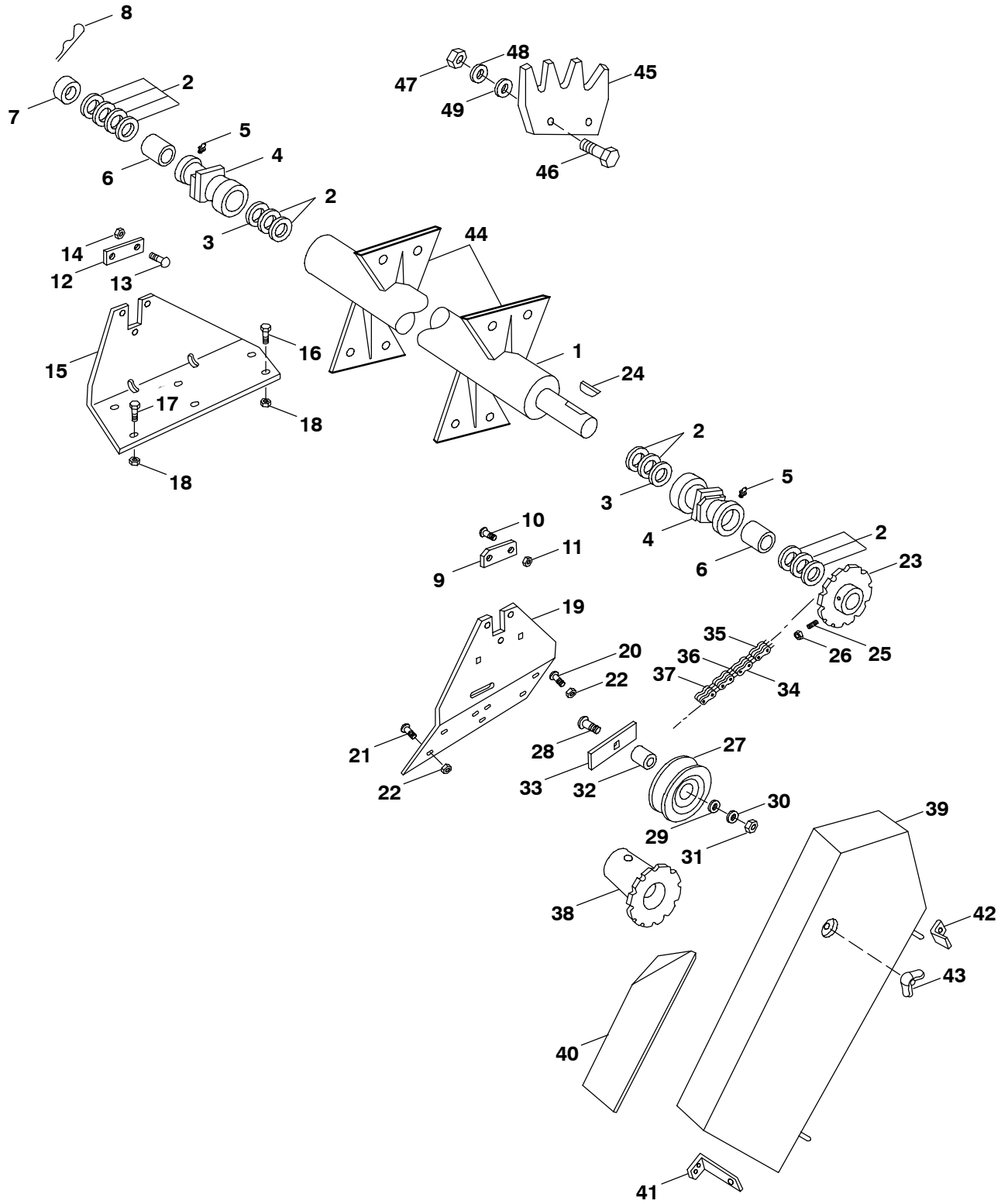

Ref. No.	Part No.	Description	Qty. Req.
01	152941	UPPER BEATER WELD/ASSY	1
02	152344	WASHER	AR
03	152346	WASHER/PHENOLIC (MUST BE AGAINST BEARING, REF. 04)	2
04	152530	BEARING/ASSY (INCL REF. 06)	2
05	570009	FITTING/GREASE 1/4-28 X 45DEG	2
06	152750	BUSHING	2
07	152835	COLLAR	1
08	152592	PIN/SPRING 1/4X1-3/4	1
09	152857	PLATE/RETAINER	1
10	650790	BOLT/CARRIAGE G5 3/8X3/4	2
11	152991	NUT/SPECIAL	2
12	152857	PLATE/RETAINER	1
13	650790	BOLT/CARRIAGE G5 3/8X3/4	2
14	152991	NUT/SPECIAL	2
15	152913	SUPPORT/LH	1
16	650790	BOLT/CARRIAGE G5 3/8X3/4	4
17	650704	BOLT/CARRIAGE G5 3/8X1	2
18	152991	NUT/SPECIAL	6
19	152914	SUPPORT WELD/ASSY/RH	1
20	650790	BOLT/CARRIAGE G5 3/8X3/4	4
21	650704	BOLT/CARRIAGE G5 3/8X1	2
22	152991	NUT/SPECIAL	6
23	152889	SPROCKET/11T	1
24	655537	KEY/WOODRUFF #D 5/16X1-1/4	1
25	650219	SHSS/CUP PT. 3/8X1	2
26	653038	NUT/JAM 3/8	2
27	152778	IDLER/CHAIN	1
28	652088	BOLT/CARRIAGE G5 1/2X3-1/2	1
29	654009	WASHER 1/2	AR
30	654030	WASHER/LOCK 1/2	1
31	653018	NUT/HEX G5 1/2	1
32	152459	SPACER 1-3/8IN LG.	1
33	152594	SPACER	1
34	152394	CHAIN/ASSY (2060 ROLLER CHAIN, 43 TOTAL PITCHES)	1
35	152580	LINK/ROLLER	41
36	070643	LINK/CONNECTOR	1
37	152581	LINK/OFFSET	1
38	152353	SPROCKET/DRIVE/10T	1
	152479	KEY/WOODRUFF #128 5/16X2-1/8	1
	152728	SHSS/CUP PT. 3/8X1-1/4	2
	653038	NUT/JAM 3/8	2
39	153020	SHIELD WELD/ASSY	1
	651110	SCREW/CAP/HEX HD G5 3/8X1	2
	071703	NUT/LOCK 3/8	2
40	152653	FILLER	1
	651066	BOLT/ROUND HD/SHORT SQ NECK G5 3/8X3/4	2
	152991	NUT/SPECIAL	2
41	153019	BRACKET	1
	650704	BOLT/CARRIAGE G5 3/8X1	1
	654026	WASHER/LOCK 3/8	1
	653010	NUT/HEX 3/8	1
42	152795	BRACKET	1
	650704	BOLT/CARRIAGE G5 3/8X1	1
	654026	WASHER/LOCK 3/8	1
	653010	NUT/HEX 3/8	1
43	152440	NUT/WING	1
	650681	BOLT/CARRIAGE G5 3/8X3-3/4	1
	654005	WASHER 3/8	1
	071703	NUT/LOCK 3/8	2
44	144357	PADDLE/WELD RH (WELD-ON)	6
	144358	PADDLE/WELD LH (WELD-ON)	6
45	152486	PADDLE (BOLT-ON)	12
46	650633	SCREW/CAP/HEX HD G5 P 1/2X1-1/4	24
47	653018	NUT G5 P 1/2-13	24
48	654030	WASHER/LOCK P 1/2	24
49	654009	WASHER P 1/2	24

1287 - LITTER PAN

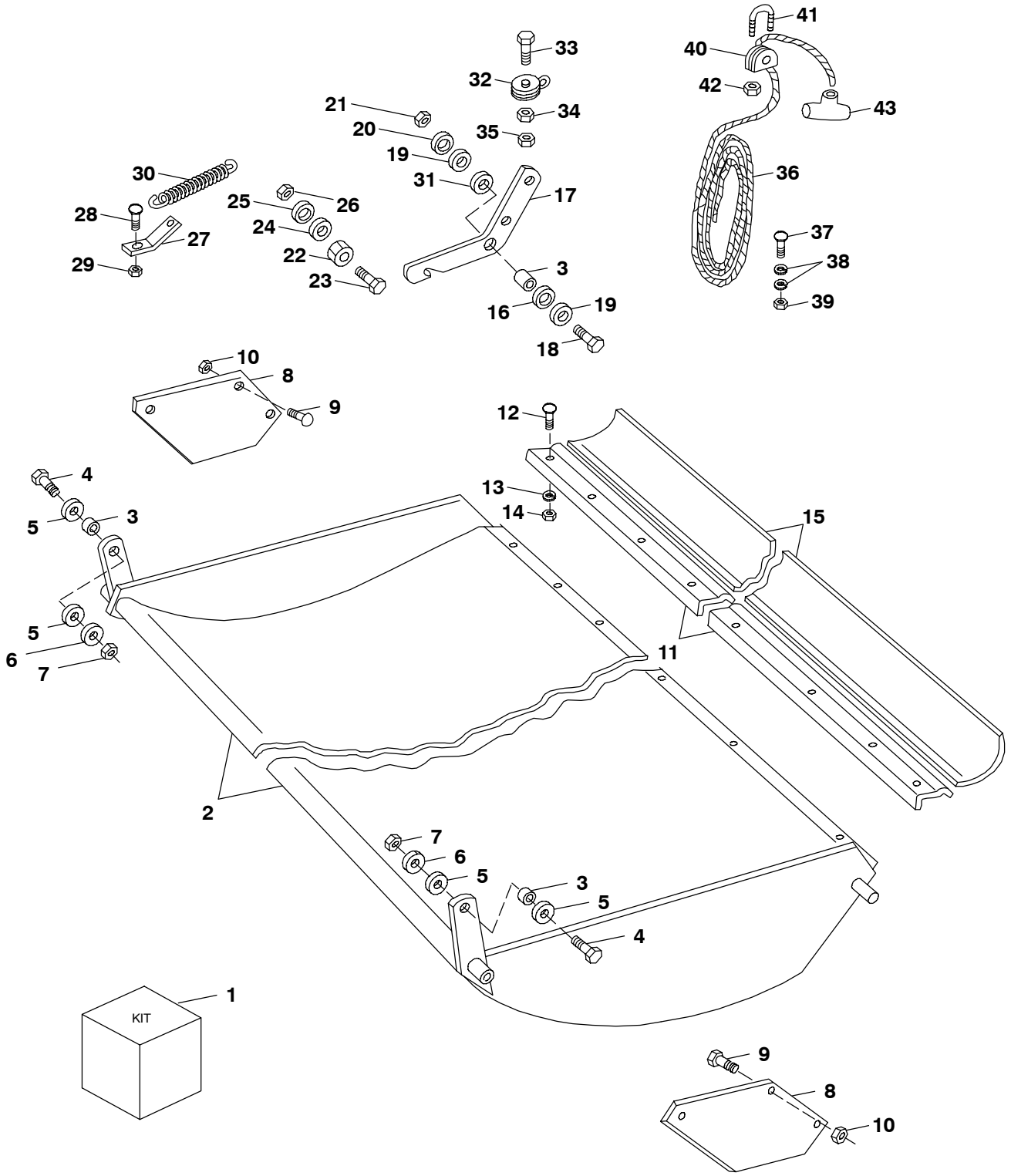

Ref. No.	Part No.	Description	Qty. Req.
01		BUNDLE/PAN/FINE MANURE	AR
02	152934	PAN WELD/ASSY	1
03	152623	BLOCK/BEARING .44 X .503ID X 7/8OD	3
04	650453	SCREW/CAP/HEX HD G5 1/2X1-1/2	2
05	654009	WASHER 1/2	4
06	654030	WASHER/LOCK 1/2	2
07	653018	NUT/HEX G5 1/2	2
08	152828	BRACKET	2
09	650704	BOLT/CARRIAGE G5 3/8X1	4
10	152991	NUT/SPECIAL	4
11	152641	ANGLE	1
12	650745	BOLT/CARRIAGE G5 5/16X1-1/4	10
13	654024	WASHER/LOCK 5/16	10
14	653007	NUT/HEX 5/16	10
15	152482	STRIP/RUBBER/PAN EXTENSION	1
16	152294	WASHER .036 X 29/32ID X 1-5/16OD	1
17	152789	LEVER	1
18	650585	SCREW/CAP/HEX HD G5 1/2X2	1
19	654009	WASHER 1/2	2
20	654030	WASHER/LOCK 1/2	1
21	653018	NUT/HEX G5 1/2	1
22	152320	SPACER/SPLIT (USED AS A STOP)	1
23	650774	BOLT/ROUND HD/SHORT SQ NECK G5 1/2X2	1
24	654009	WASHER 1/2	1
25	654030	WASHER/LOCK 1/2	1
26	653018	NUT/HEX G5 1/2	1
27	152626	BRACKET	1
28	650687	BOLT/ROUND HD/SHORT SQ NECK G5 5/16X3/4	1
29	210-19470	NUT/HEX/FLANGE USR 5/16	1
30	152295	SPRING	1
31	152321	WASHER .135 X .531ID X 1-1/4OD	1
32	152304	PULLEY	1
33	650569	SCREW/CAP/HEX HD G5 1/2X1-3/4	1
34	653018	NUT/HEX G5 1/2	1
35	071706	LN 1/2	1
36	152448	ROPE 32IN LG.	1
37	153040	BOLT/CARRIAGE G5 3/8X1-1/2	1
38	654005	WASHER 3/8	2
39	071703	NUT/LOCK/HEX GC 3/8	1
40	059721	GUIDE/ROPE	2
41	152288	U-BOLT	1
42	152504	NUT/HEX #10	4
43	152325	GRIP/ROPE (OPTIONAL)	1

1287 - SLOW SPEED

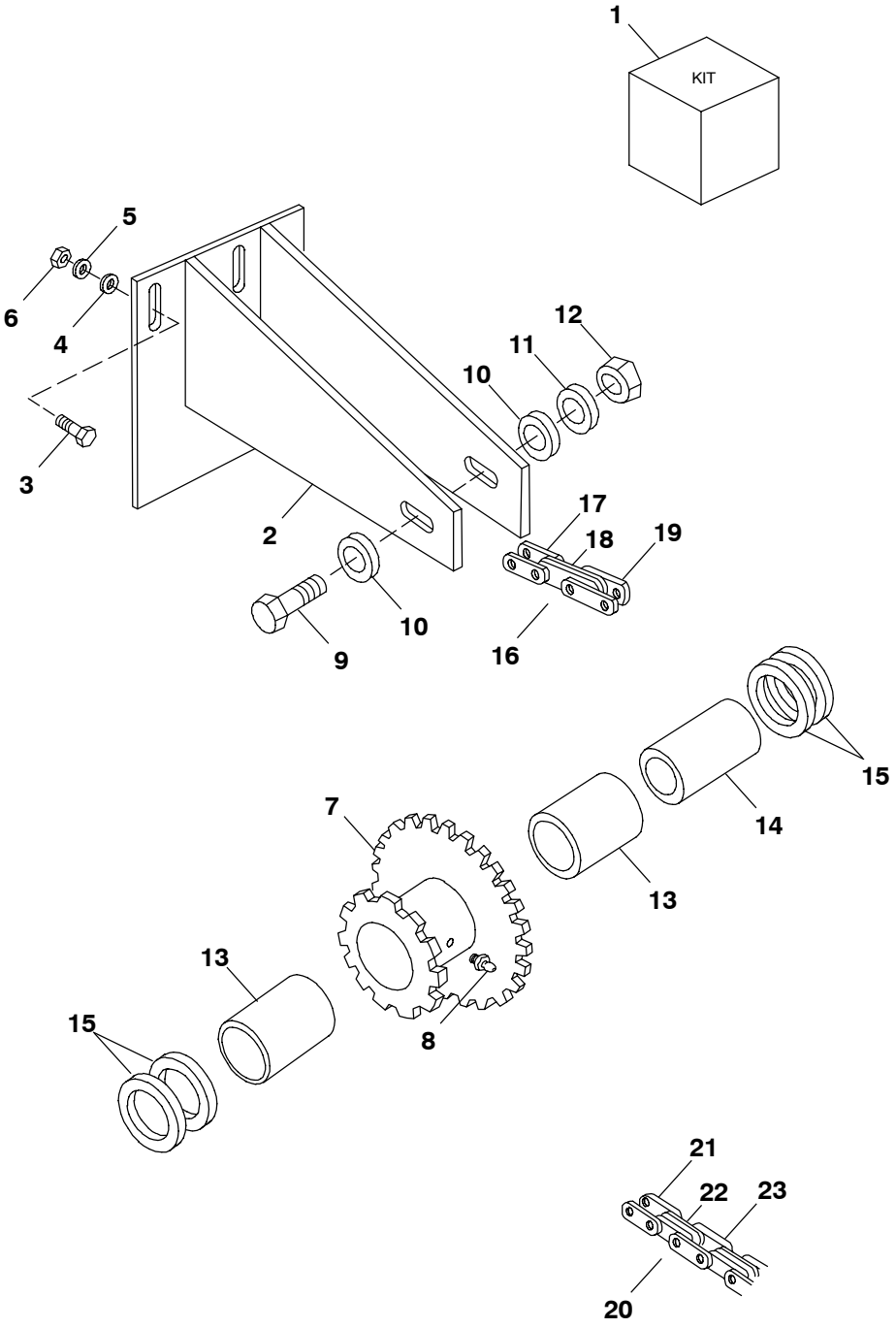

Ref. No.	Part No.	Description	Qty. Req.
01		BUNDLE/SLOW SPEED (INCL REF. 02-19)	AR
02	152587	IDLER SUPPORT WELD/ASSY	1
03	650704	BOLT/CARRIAGE G5 3/8X1	3
04	654005	WASHER 3/8	3
05	654026	WASHER/LOCK 3/8	3
06	653010	NUT/HEX 3/8	3
07	152753	SPROCKET & BUSHING/ASSY (INCL REF. 13)	1
08	053894	FITTING/LUBE 1/4-28	1
09	650454	SCREW/CAP/HEX HD G5 1/2X3-3/4	1
10	654009	WASHER 1/2	2
11	654030	WASHER/LOCK 1/2	1
12	653018	NUT/HEX G5 1/2	1
13	152286	BUSHING	2
14	152615	SPACER	1
15	654009	WASHER	AR
16	152392	CHAIN/ASSY/#40 ROLLER CHAIN 35 TOTAL PITCHES	1
17	500036	LINK/ROLLER	33
18	500037	LINK/CONNECTOR	1
19	500038	LINK/OFFSET	1
20	152375	CHAIN/ASSY/#40 ROLLER CHAIN 60 TOTAL PITCHES	1
21	500036	LINK/ROLLER	59
22	500037	LINK/CONNECTOR	1
23	500038	LINK/OFFSET	1

1287 - LIQUID SIDES

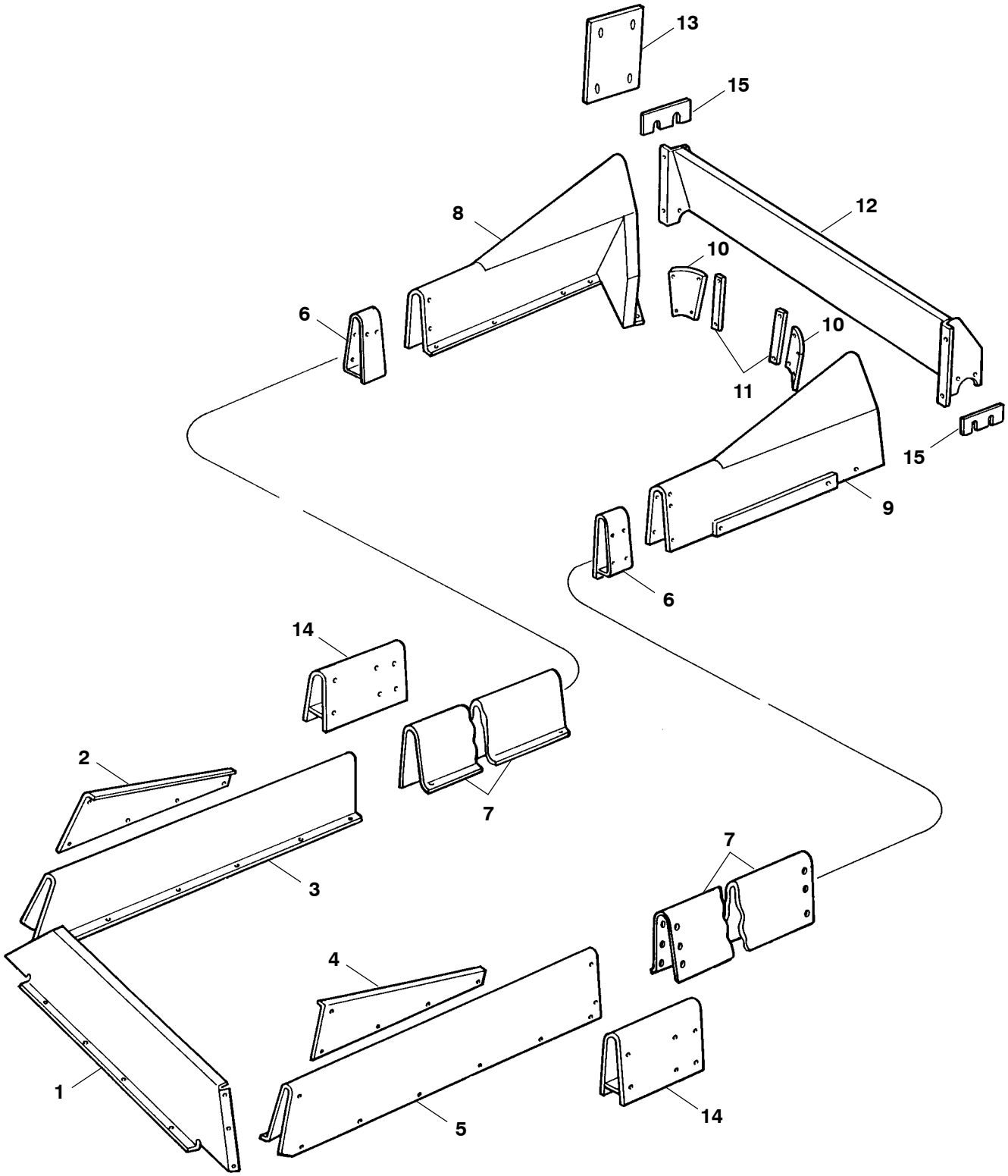

Ref. No.	Part No.	Description	Qty. Req.
01	152824	SLURRY PANEL/FRONT	1
	152451	SCREW/SELF-TAPPING HWH 3/8X3/4 USR	4
02	152870	FRONT EXTENSION/RH	1
	152451	SCREW/SELF-TAPPING HWH 3/8X3/4 USR	4
	651066	BOLT/ROUND HD/SHORT NECK G5 3/8X3/4	1
03	153024	FRONT SLURRY SIDE/RH	1
	152451	SCREW/SELF-TAPPING HWH 3/8X3/4 USR	5
	651066	BOLT/ROUND HD/SHORT NECK G5 3/8X3/4	4
	651066	BOLT/CARRIAGE G5 3/8X1	1
	651066	BOLT/CARRIAGE G5 3/8X1-1/4	1
	651066	WASHER 3/8	1
	651066	WASHER/LOCK 3/8	1
	653010	NUT/HEX 3/8	1
	152991	NUT/SPECIAL	5
04	152823	EXTENSION/FRONT/LH	1
	152451	SCREW/SELF-TAPPING HWH 3/8X3/4 USR	4
	651066	BOLT/ROUND HD/SHORT NECK G5 3/8X3/4	1
	152991	NUT/SPECIAL	1
05	153025	SLURRY SIDE/FRONT/LH	1
	152451	SCREW/SELF-TAPPING HWH 3/8X3/4 USR	5
	651066	BOLT/ROUND HD/SHORT NECK G5 3/8X3/4	4
	651066	BOLT/CARRIAGE G5 3/8X1	1
	651066	BOLT/CARRIAGE G5 3/8X1-1/4	1
	651066	WASHER 3/8	1
	651066	WASHER/LOCK 3/8	1
	651066	NUT/HEX 3/8	1
	152991	NUT/SPECIAL	5
06	153023	CONNECTION/SIDE	2
	152451	SCREW/SELF-TAPPING HWH 3/8X3/4 USR	16
07	152715	EXTENSION/SLURRY SIDE 71-5/8IN LG.	2
	152451	SCREW/SELF-TAPPING HWH 3/8X3/4 USR	26
	651066	BOLT/ROUND HD/SHORT NECK G5 3/8X3/4	8
	650704	BOLT/ROUND HD/SHORT NECK G5 3/8X1	2
	152991	NUT/SPECIAL	10
08	152922	SLURRY WELD/ASSY/REAR/RH	1
	152451	SCREW/SELF-TAPPING HWH 3/8X3/4 USR	4
	651066	BOLT/ROUND HD/SHORT NECK G5 3/8X3/4	3
	651066	BOLT/CARRIAGE G5 3/8X1-1/4	3
	152991	NUT/SPECIAL	6
09	152921	SLURRY WELD/ASSY/REAR/LH	1
	152451	SCREW/SELF-TAPPING HWH 3/8X3/4 USR	4
	651066	BOLT/ROUND HD/SHORT NECK G5 3/8X3/4	3
	651066	BOLT/CARRIAGE G5 3/8X1	1
	651066	BOLT/CARRIAGE G5 3/8X1-1/4	1
	152991	NUT/SPECIAL	6
10	152437	SEAL/RUBBER/ENDGATE EXT	2
11	152598	STRIP/SEAL REINFORCEMENT	2
	651066	BOLT/CARRIAGE G5 3/8X1	1
	651066	BOLT/CARRIAGE G5 3/8X1-1/4	1
	651066	WASHER/LOCK 3/8	2
	651066	NUT/HEX 3/8	2
12	152878	EXTENSION WELD/ASSY/ENDGATE	1
	651066	BOLT/ROUND HD/SHORT NECK G5 3/8X3/4	4
	651110	SCREW/CAP/HEX HD G5 3/8X1	4
	152991	NUT/SPECIAL	8
13	153031	PLATE/FILLER (USED RH SIDE ONLY WITHOUT UPPER BEATER)	1
14	152707	CONNECTION WELD/ASSY/SIDE	2
15	152466	SPACER/SHIM	2

1287 - ENDGATE

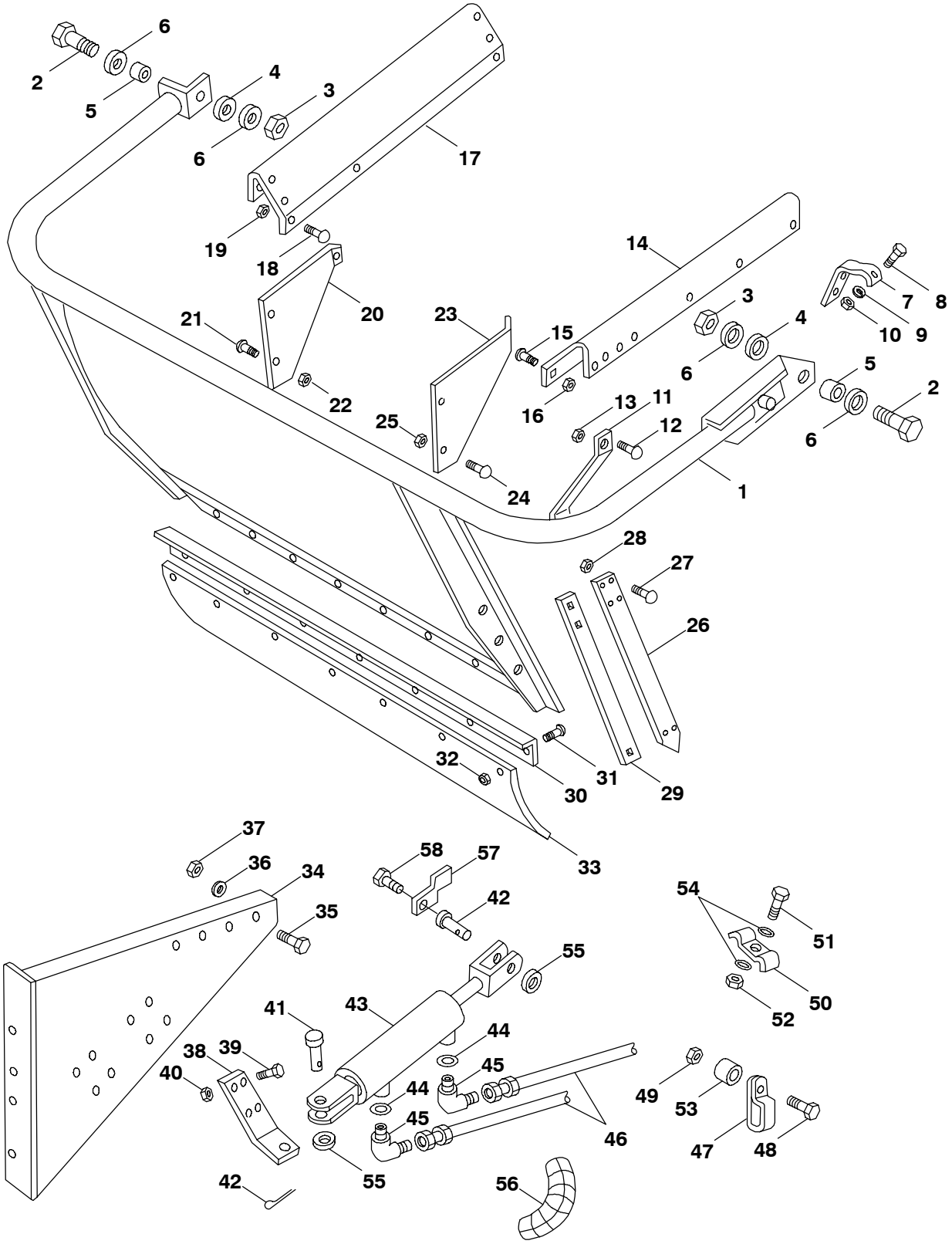

Ref. No.	Part No.	Description	Qty. Req.
01	152972	ENDGATE WELD/ASSY	1
02	650868	SCREW/CAP/HEX HD G5 3/4X2-1/4	2
03	064331	NUT/LOCK/HEX 3/4	2
04	152410	WASHER/HARDENED	AR
05	152729	SPACER 5/8 THICK X 3/4ID X 1OD	2
06	152455	WASHER	8
07	152702	BRACE/FRONT	1
08	650494	SCREW/CAP/HEX HD G5 1/2X1	1
09	654030	WASHER/LOCK 1/2	1
10	071706	LN 1/2	1
11	152662	BRACE/REAR	1
12	650704	BOLT/CARRIAGE G5 3/8X1	1
13	152991	NUT/HEX/FLANGE USR 3/8	1
14	152747	SUPPORT/GATE/RH	1
15	650786	BOLT/CARRIAGE 3/8X1-1/4	5
16	152991	NUT/SPECIAL	5
17	153030	SUPPORT/GATE/LH	1
18	650704	BOLT/CARRIAGE G5 3/8X1	6
19	152991	NUT/SPECIAL	6
20	152701	PLATE/FILLER/LH	1
21	603761	BOLT/ROUND HD/SHORT SQ NECK G5 3/8X1-1/4	3
22	152991	NUT/SPECIAL	3
23	152661	PLATE/FILLER/RH	1
24	603761	BOLT/ROUND HD/SHORT SQ NECK G5 3/8X1-1/4	3
25	152991	NUT/SPECIAL	3
26	152438	SEAL/SIDE/RUBBER	2
27	603761	BOLT/ROUND HD/SHORT SQ NECK 3/8X1-1/4	6
28	152991	NUT/SPECIAL	6
29	152599	STRIP/SIDE/SEAL REINFORCEMENT	2
30	152691	REINFORCEMENT	1
31	603761	BOLT/ROUND HD/SHORT SQ NECK 3/8X1-1/4	9
32	152991	NUT/SPECIAL	9
33	152488	SEAL/BOTTOM/RUBBER	1
34	152809	BRACKET WELD/ASSY	1
35	650633	SCREW/CAP/HEX HD G5 1/2X1-1/4	8
36	654030	WASHER/LOCK 1/2	8
37	071706	LN 1/2	8
38	152766	BRACKET/CYLINDER SUPPORT	1
39	650844	SCREW/CAP/HEX HD G5 5/8X1-3/4	4
40	129311	NUT/LOCK/HEX 5/8	4
41	152401	PIN/CLEVIS	2
42	655020	PIN/COTTER 3/16X1-1/2	1
43	152931[a]	HYDRAULIC CYLINDER/ASSY	1
44	152609	O-RING	2
45	054816	ELBOW/ASSY 90DEG MALE (INCL REF. 46)	2
46	152812	HOSE/ASSY 3/8X288IN LG. 1/2NPT MALE TO 3/4-16UNF FEMALE	2
47	097860	CLAMP 11/16X1-3/8	5
48	650491	SCREW/CAP/HEX HD G5 3/8X1-1/4	1
49	152991	NUT/SPECIAL	1
50	152833	CLAMP	1
51	650491	SCREW/CAP/HEX HD G5 3/8X1-1/4	1
52	152991	NUT/SPECIAL	1
53	152293	SPACER	1
54	654005	WASHER 3/8	2
55	152622	WASHER/HARDENED	2
56	152643	CONDUIT/PLASTIC SPLIT	AR
57	152588	CLIP	1
58	152495	SCREW	1

a) For breakdown, see Components page titled "Endgate Cylinder Assembly".

1287 - ENDGATE HYDRAULIC CYLINDER (LATER STYLE)

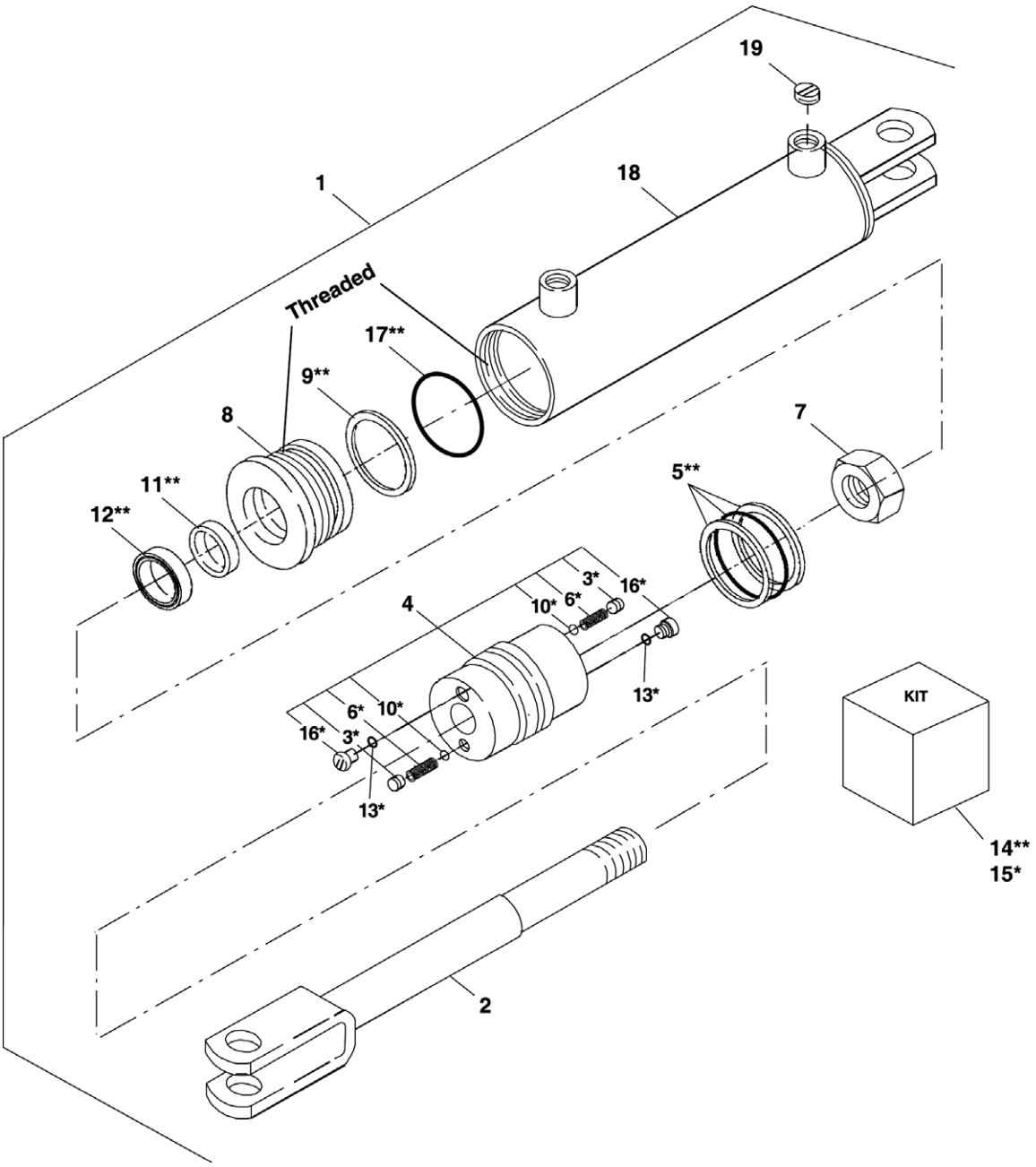

Ref. No.	Part No.	Description	Qty. Req.
01	173702	CYLINDER/ASSY	1
02	173703	ROD/CYLINDER	1
03	NS	SEAL	1
04	173704	PISTON/CYLINDER	1
05	NS	O-RING	2
06	NS	SPRING/COMPRESSION	2
07	126530	NUT/LOCK P UNF 3/4	1
08	173705	HEAD/CYLINDER	1
09	NS	WASHER	1
10	NS	BALL/STEEL	2
11	NS	SEAL	1
12	053948	SEAL/OIL	1
13	NS	O-RING	2
14	173706	KIT/SEAL (INCL REF. 5, 9, 11, 12 & 17)	1
15	173720	KIT/RELIEF VALVE (INCL REF. 3, 6, 10, 13 & 16)	1
16	NS	FITTING	2
17	NS	O-RING	1
18	NS	BARREL	1
19	152417	ORIFICE	1

1287 - ENDGATE HYDRAULIC CYLINDER (EARLY STYLE)

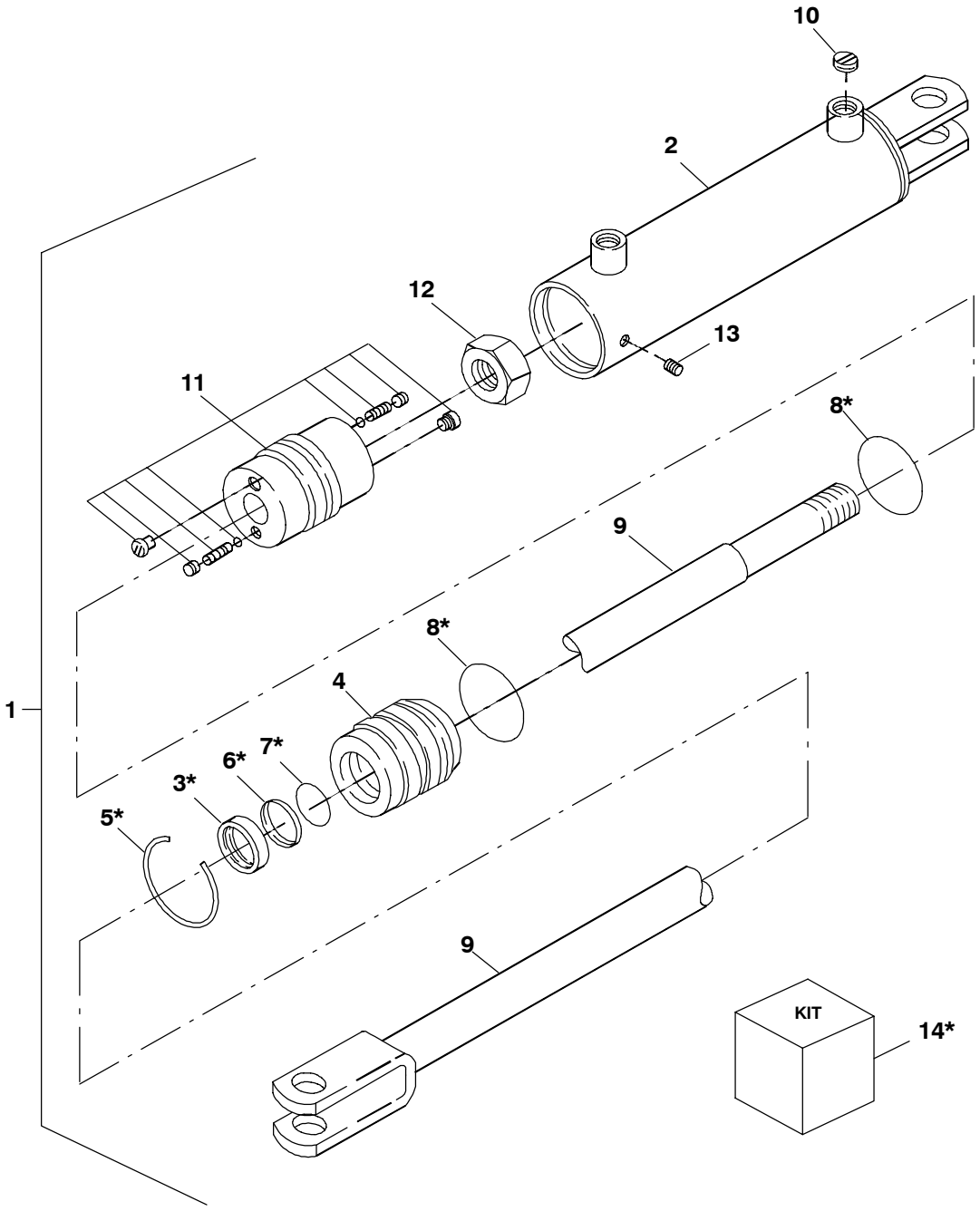

Ref. No.	Part No.	Description	Qty. Req.
01	152931	CYLINDER/ASSY	1
02	NS	BARREL	1
03	NS	SEAL	1
04	143999	CYLINDER HEAD/ASSY (INCL REF 3, 6, 7, 8 AND THE HEAD)	1
05	NS	RING/RETAINING	1
06	NS	WASHER/BACK-UP	1
07	NS	O-RING	1
08	NS	O-RING	2
09	173703	PISTON ROD/ASSY	1
10	152417	ORIFICE	1
11	173704	PISTON/ASSY	1
12	126530	NUT/LOCK P UNF 3/4	1
13	650338	SCREW/SET/SELF-LOCKING	1
14	152415	KIT/REPAIR/ASSY (INCL REF. 3, 5, 6, 7 & 8)	1

1287 - OPTIONS & ACCESSORIES - TRANSPORT LIGHTS (LATER STYLE)

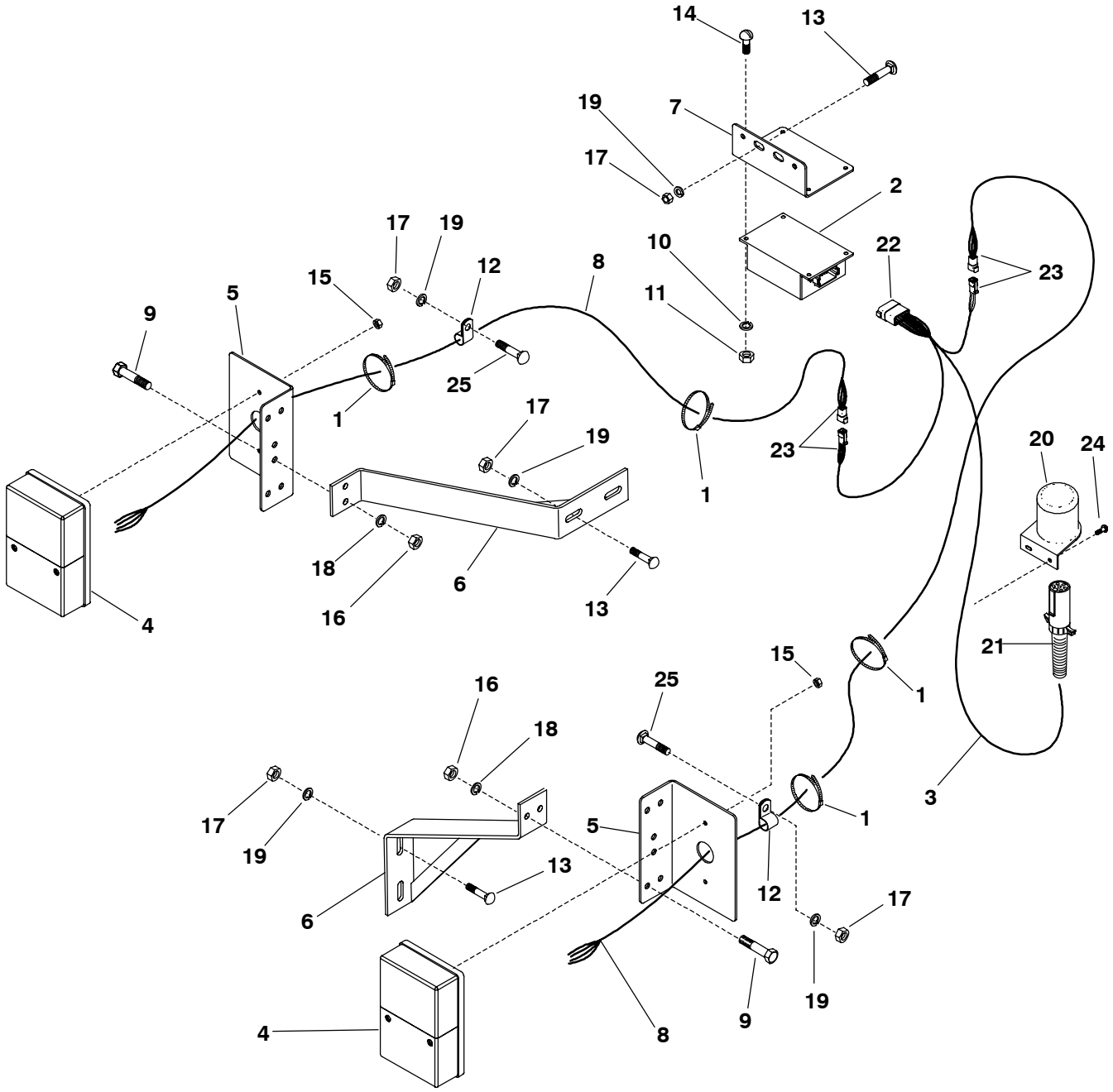

Amber light to be on top both sides

Amber light bulb 1156 12V

Red light bulb 1157 12V

_____ 1287 - OPTIONS & ACCESSORIES - TRANSPORT LIGHTS (LATER STYLE)

Ref. No.	Part No.	Description	Qty. Req.
01	055648	TIE/WIRE	20
02	156836	MODULE/LIGHT	1
03	156841	HARNESS/LIGHT	1
04	157123	LIGHT	2
05	157980	BRACKET/LIGHT	2
06	158142	MOUNT/LIGHT	2
07	159814	BRACKET/MODULE	1
08	170320	HARNESS/LAMP	2
09	651135	CS 5/16X3/4 C5ZY	4
10	650549	LW #10 RZY	4
11	650550	HN MS #1024 CZY	4
12	059075	CLAMP/HOSE	15
13	651067	CB SN 3/8X1 C5ZY	5
14	650815	RHMS SLT #1024X3/4 CZY	4
15	651456	HLN INST M5-0.80 C8 ZO	4
16	653007	HN 5/16 C2ZY	4
17	653010	HN 3/8 C2ZY	20
18	654024	LW 5/16 RZY	4
19	654026	LW 3/8 RZY	20
20	112886	HOLDER	1
21	112917	PLUG/7-PIN W/CABLE PROTECTOR	1
22	157336	KIT/DEUTSCH 12-WAY CONNECTOR	1
23	157335	KIT/DEUTSCH 4-WAY CONNECTOR	1
24	152493	SCREW/SELF-TAPPING	2
25	651066	CB SN 3/8X3/4 C5ZY	15

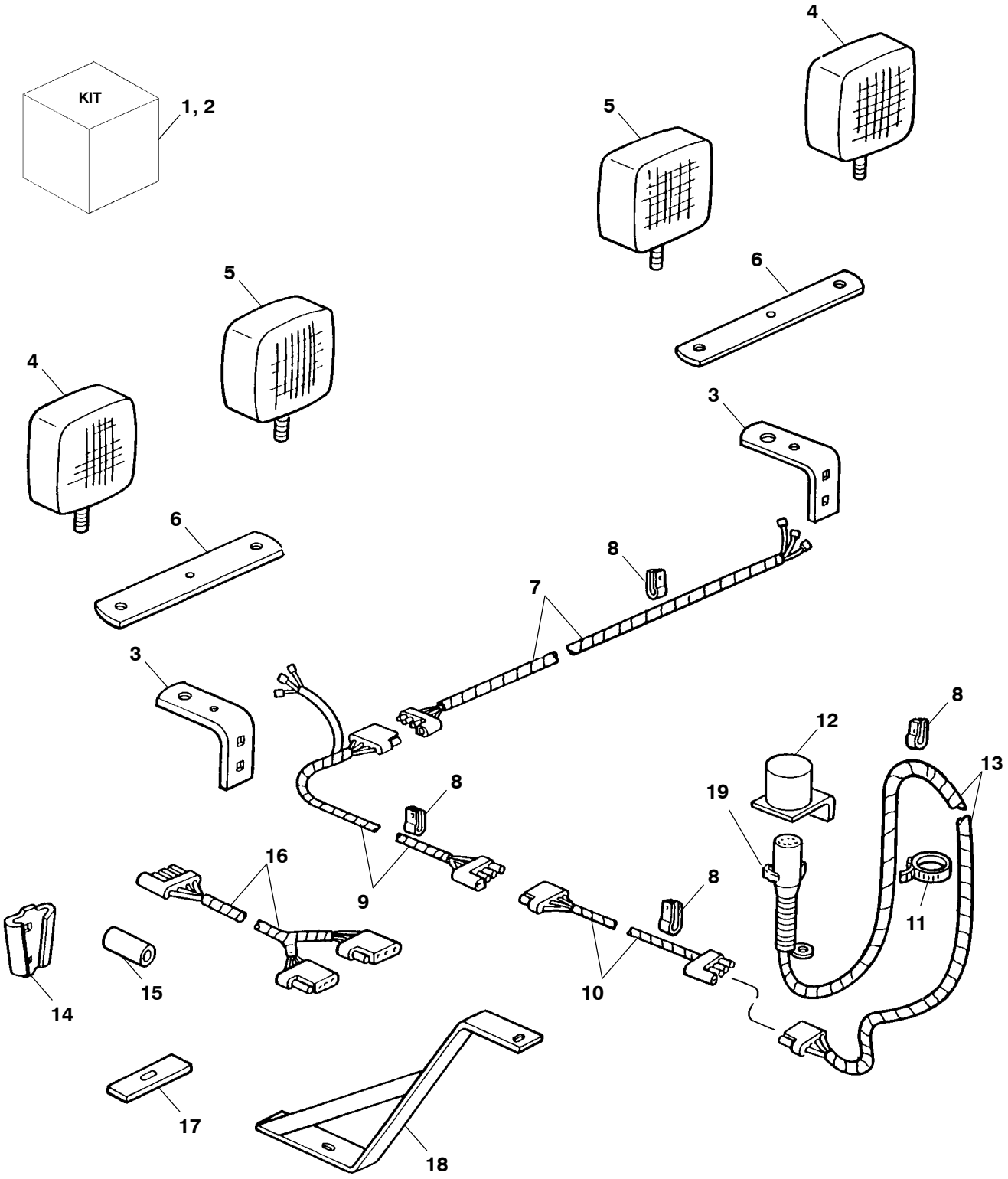
KIT
1, 2
4
5
5
6
4
3
6
8
7
3
8
12
13
19
8
16
9
8
11
14
15
10
17
18

Ref. No.	Part No.	Description	Qty. Req.
01	143072	KIT/LIGHT (INCL REF. 02-17)	1
02	143073	KIT/LIGHT HARNESS (INCL REF. 08-11 & 15, 16 & 18)	1
03	152462	BRACKET/LAMP	2
	152487	SCREW/SELF-TAPPING HWH 5/16X5/8	4
04	152527	LAMP/DOUBLE FACE/AMBER	2
	654030	WASHER/LOCK 1/2	2
	654009	WASHER 1/2	2
	653019	NUT G5 1/2	2
	144002	LENS/AMBER	4
	152649	LAMP/BULB	2
	152500	GASKET	2
	654004	WASHER/FLAT 5/16	2
	654024	WASHER/LOCK 5/16	2
	210-19470	NUT/FLANGE 5/16 USR	2
05	152526	LAMP/DOUBLE FACE/RED	2
	654030	WASHER/LOCK 1/2	2
	654009	WASHER 1/2	2
	653019	NUT G5 1/2	2
	152501	LENS/RED	2
	152649	LAMP/BULB	2
	152500	GASKET	2
	654004	WASHER/FLAT 5/16	2
	654024	WASHER/LOCK 5/16	2
	210-19470	NUT/FLANGE 5/16 USR	2
06	152463	BRACKET	2
07	152507	HARNESS/WIRE	1
	152703	GROMMET	1
	152987	SCREW/SELF-LOCKING HWH 5/16X3/4	1
	210-19470	NUT/FLANGE 5/16 USR	1
08	079414	J-CLAMP	5
	152371	CLAMP/BOLT .44X.26	1
	152591	CLAMP	4
	152429	CLAMP/BOLT .38X.38	21
	076078[a]	CLAMP/BOLT .75X.31	6
09	152506	HARNESS/WIRE	1
	152987	SCREW/SELF-LOCKING HWH 5/16X3/4	AR
	210-19470	NUT/FLANGE 5/16 USR	AR
	152487	SCREW/SELF-TAPPING HWH 5/16X5/8	2
	152876[a]	HARNESS/WIRE 115 LG.	1
10	152875[a]	HARNESS/WIRE 55 LG.	2
	153038	SCREW/SELF-LOCKING HWH 5/16X3/4	AR
	152991	NUT/FLANGE 3/8 USR	AR
	152429	CLAMP 3/8	1
	654004	WASHER/FLAT 5/16	AR
	650773	SCREW/CAP/HEX HD G5 5/16X2-1/2	AR
	153037	SCREW/CAP/HEX HD G5 5/16X2	AR
	152690	NUT/FLANGE 1/4 USR	AR
	152487	SCREW/SELF-TAPPING HWH 5/16X5/8	1
	210-19470	NUT/FLANGE 5/16 USR	1
11	074091[a]	TIE/CABLE	12
	079340	BAND/PLASTIC	2
12	112886	HOLDER/PLUG	1
	152493	SCREW/SELF-TAPPING HWH 1/4X5/8 USR	2
13	152498[d]	HARNESS/WIRE	1
14	047269[c]	SOCKET/ASSY	2
15	152459[a,c]	SPACER	1
16	152508[a,b]	HARNESS/WIRE/Y-CONNECTOR	1
17	152593[c]	PAD	4
18	152720[a,c]	BRACKET WELD/ASSY	2
19	112917	PLUG/7-PIN W/CABLE PROTECTOR	1

a) Component of Light Harness Kit.

b) Part is needed on some models to run Light Kit Wire Harness along both sides of unit.

c) Component of Trailing Light Kit so the kit can be adapted to various models across all product lines.

d) For repair of 7-Pin Plug with Cable Protector order 112917.

142966 Safety Chain - 10-Ton

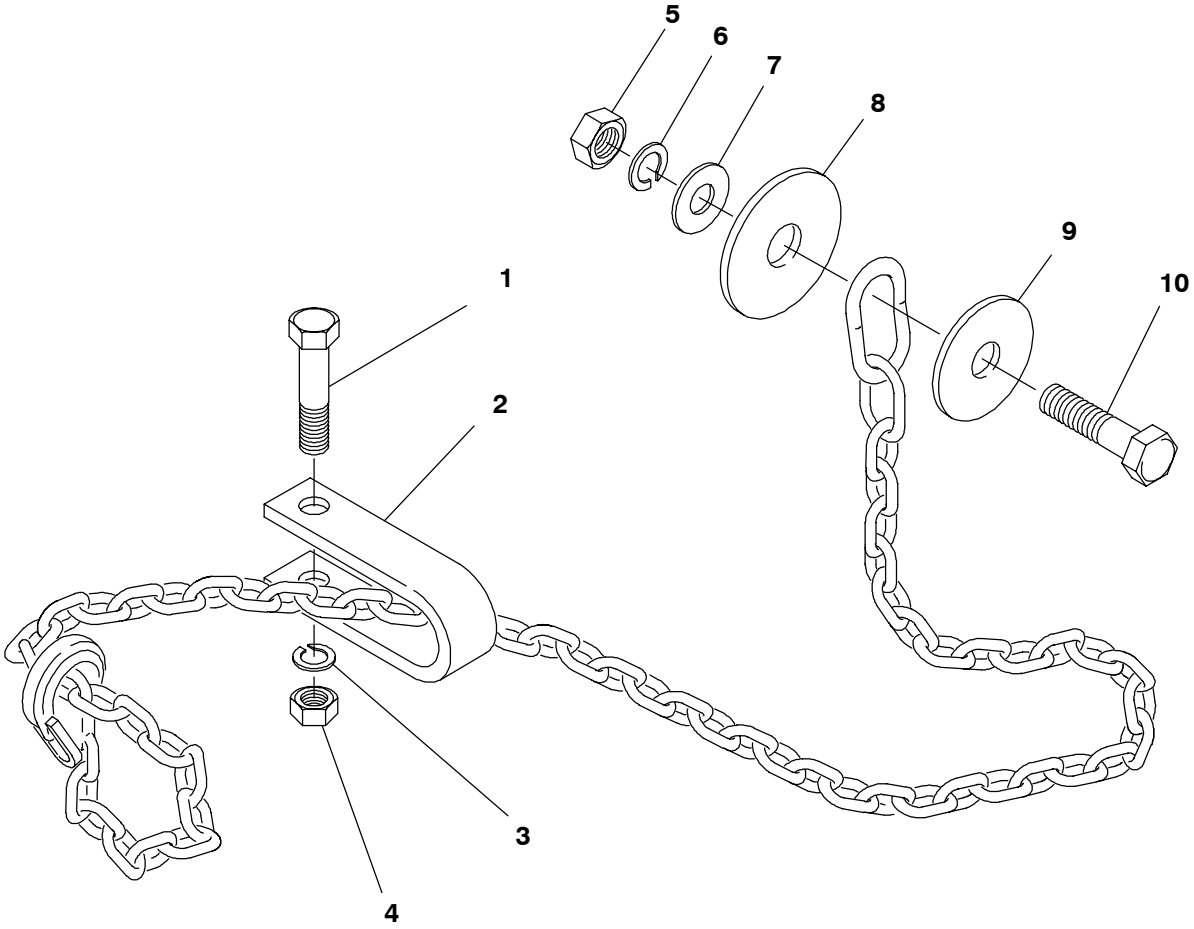

Ref. No.	Part No.	Description	Qty. Req.
	142966	CHAIN/SAFETY TOW 10-TON	1
		CONSISTS OF:	
01	650695	CS 5/8X3-1/2	1
02	080894	CLEVIS	1
03	654032	LW 5/8	1
04	653021	HN 5/8	1
05	653026	HN 3/4	1
06	654034	LW 3/4	1
07	654014	FW 3/4	1
08	043912	FW 1-1/32 SPECIAL	1
09	069076	FW 25/32	1
10	650172	CS 3/4X3-1/4	1

Index

A

Apron, 10
Apron Controls, 12
Apron Drive Gearbox, 32
Apron Drive Hydraulic Motor, 26
Axle, 8

B

Beater Assembly
  Main, 38
  Upper, 42
Beater Drive Gearbox, 28

D

Decal Application, 2
Decal Locations, 2–4
Decal Set and list, 2

E

Endgate, 34

F

Floor, 8
Flow Control Valve, 30

G

Gearbox
  Apron Drive, 32
  Beater Drive, 28

H

Hitch Frame, 6
Hub Assembly, 8
Hydraulic Apron Drive
  Flow Control Valve, 22
  Rear Drive, 24
Hydraulic Cylinder,
    Apron Control, 14
Hydraulic Endgate, 50
Hydraulic Fitting Data, 68
Hydraulic Motor, Apron Drive, 26

J

Jack, 6

L

Liquid Sides, 48
Litter Pan, 44

M

Main Frame, 8

O

Options & Accessories
  Safety Chain, 58
  Transport Lights, 54–57

P

Paint Notice, 2
PTO, 4

S

Shields, 34
Side Drive, 18
Sides, 34
Slow Speed, 46
Splash Guard, 40
Standard Apron Drive
  Front Drive, 16
  Rear Drive, 20

W

Wheel Hub, 8

Part No.	Page No.	Ref. No.	Part No.	Page No.	Ref. No.	Part No.	Page No.	Ref. No.	Part No.	Page No.	Ref. No.
13E24	07	11	071703	43	39	143005	35	08	152305	23	15
H7846	19	02	071703	43	43	143007	02	18	152307	21	23
H8353	21	28	071703	45	39	143007	05	12	152308	21	10
005870	05	03	071705	09	09	143008	02	17	152308	25	08
043912	58	08	071706	45	35	143008	09	17	152309	21	05
045026	21	21	071706	51	10	143014	02	20	152310	05	14
047269	37	28	071706	51	37	143015	02	20	152311	13	16
047269	57	14	074091	57	11	143016	02	20	152312	33	12
049073	25	14	076002	17	05	143072	57	01	152313	13	33
049073	27	01	076002	19	09	143073	57	02	152318	29	14
049498	27	13	076068	19	16	143243	02	20	152320	45	22
051569	31	11	076078	57	08	143316	05	02	152321	45	31
051909	33	17	079340	57	11	143317	17	06	152324	07	07
053894	07	13	079414	57	08	143319	21	29	152324	07	08
053894	13	19	080894	58	02	143319	25	19	152324	07	09
053894	19	09	081374	07	02	143319	33	21	152324	09	06
053894	21	01	082231	19	19	143999	53	04	152324	35	14
053894	21	14	091444	02	03	144000	37	29	152324	39	26
053894	21	20	091444	05	07	144001	27	06	152325	13	11
053894	21	24	093020	02	04	144002	57	04	152325	23	19
053894	21	26	093366	02	05	144357	43	44	152325	45	43
053894	25	01	093367	02	06	144358	43	44	152326	05	04
053894	47	08	093373	02	07	144361	39	06	152327	17	18
053948	52	12	093457	02	08	144362	39	06	152330	17	08
054816	51	45	094913	02	09	145216	02	01	152330	29	13
054848	23	05	094914	02	19	145217	02	02	152331	13	30
054850	23	03	097860	51	47	152032	33	13	152334	09	11
055648	55	01	112886	55	20	152274	11	04	152335	09	23
059075	55	12	112886	57	12	152274	17	07	152343	13	36
059721	13	09	112917	55	21	152275	19	17	152344	43	02
059721	23	17	112917	57	19	152277	09	18	152345	09	15
059721	45	40	122617	02	19	152278	11	07	152346	43	03
064331	51	03	126530	52	07	152278	39	12	152347	21	25
064415	09	24	126530	53	12	152282	13	17	152348	21	02
065054	39	24	129311	09	04	152283	21	19	152348	25	02
065507	23	06	129311	17	18	152284	07	17	152349	29	09
067457	25	10	129311	51	40	152285	13	32	152350	13	08
067880	13	07	142966	58	00	152286	47	13	152350	23	14
069076	58	09	142973	05	01	152288	13	10	152352	29	07
070643	43	36	142974	05	08	152288	23	18	152353	43	38
071700	05	16	142984	02	10	152288	45	41	152355	13	23
071700	37	29	142985	02	11	152293	51	53	152355	23	16
071701	35	03	143000	02	12	152294	45	16	152356	17	13
071701	37	26	143001	02	13	152295	45	30	152360	37	33
071703	07	11	143002	02	10	152299	13	38	152361	17	11
071703	21	07	143003	02	14	152299	21	09	152365	23	04
071703	37	32	143004	02	15	152301	13	22	152365	23	07
071703	39	11	143005	02	16	152304	45	32	152366	23	04

Part No.	Page No.	Ref. No.	Part No.	Page No.	Ref. No.	Part No.	Page No.	Ref. No.	Part No.	Page No.	Ref. No.
152366	23	07	152436	35	10	152487	57	09	152588	51	57
152371	57	08	152437	49	10	152487	57	10	152589	07	16
152372	39	10	152438	51	26	152488	51	33	152591	57	08
152373	29	12	152439	13	34	152493	55	24	152592	43	08
152374	37	36	152440	35	02	152493	57	12	152593	57	17
152375	19	21	152440	43	43	152495	51	58	152594	43	33
152375	47	20	152445	09	01	152496	33	11	152598	49	11
152378	31	02	152445	09	02	152497	51	46	152599	51	29
152379	33	15	152445	09	03	152498	57	13	152600	13	18
152380	11	12	152445	09	05	152499	25	05	152606	23	08
152380	21	30	152445	09	25	152500	57	04	152607	23	10
152380	25	18	152448	45	36	152500	57	05	152609	51	44
152380	33	24	152449	17	17	152501	57	05	152610	37	29
152381	11	08	152450	09	10	152502	05	02	152611	31	05
152384	31	03	152451	37	24	152503	05	02	152612	31	09
152385	31	15	152451	49	01	152504	13	10	152613	31	10
152388	17	09	152451	49	02	152504	23	18	152615	47	14
152389	13	34	152451	49	03	152504	45	42	152616	27	10
152389	39	04	152451	49	04	152506	57	09	152619	13	15
152390	13	37	152451	49	05	152507	57	07	152620	25	07
152392	47	16	152451	49	06	152508	57	16	152621	33	02
152394	43	34	152451	49	07	152511	09	03	152622	51	55
152396	27	03	152451	49	08	152513	09	02	152623	45	03
152400	15	06	152451	49	09	152514	09	01	152624	39	23
152400	17	06	152454	23	09	152516	37	31	152625	13	02
152401	51	41	152455	09	04	152517	37	35	152626	45	27
152402	25	11	152455	09	08	152519	33	20	152627	19	10
152403	25	13	152455	51	06	152520	11	09	152629	21	03
152406	33	10	152456	13	06	152523	13	26	152629	25	03
152408	13	20	152457	33	09	152525	11	05	152634	09	13
152410	51	04	152459	43	32	152526	57	05	152635	35	06
152413	19	20	152459	57	15	152527	57	04	152636	35	07
152415	52	19	152460	13	28	152530	43	04	152640	07	18
152415	53	14	152461	21	06	152531	33	18	152641	45	11
152417	53	10	152462	57	03	152532	09	23	152642	09	21
152417	53	15	152463	57	06	152572	13	14	152643	51	56
152419	25	06	152465	17	10	152574	31	06	152644	29	02
152420	13	29	152466	49	15	152575	13	04	152645	17	01
152421	21	16	152468	27	20	152577	13	05	152649	57	04
152421	33	14	152472	07	14	152579	13	35	152649	57	05
152422	13	25	152476	11	09	152580	43	35	152650	13	27
152424	19	15	152477	39	09	152581	43	37	152651	13	03
152426	31	07	152479	43	38	152582	17	02	152652	11	02
152427	37	30	152480	09	14	152583	31	08	152653	43	40
152428	19	19	152481	33	03	152584	31	04	152654	07	18
152429	57	08	152482	45	15	152585	19	11	152661	51	23
152429	57	10	152486	43	45	152586	37	25	152662	51	11
152430	21	11	152487	57	03	152587	47	02	152663	07	12

Part No.	Page No.	Ref. No.	Part No.	Page No.	Ref. No.	Part No.	Page No.	Ref. No.	Part No.	Page No.	Ref. No.
152665	19	18	152755	07	06	152846	21	20	152940	21	24
152670	25	09	152756	07	05	152847	35	12	152941	43	01
152673	27	16	152761	19	07	152849	35	02	152943	29	11
152674	27	02	152763	11	09	152853	39	01	152944	21	04
152675	27	22	152766	51	38	152856	07	10	152944	25	04
152677	29	10	152769	07	04	152857	43	09	152944	29	01
152678	35	05	152770	07	03	152857	43	12	152945	35	15
152679	09	07	152772	09	05	152858	41	02	152953	35	19
152681	29	06	152775	09	25	152859	41	09	152954	39	08
152682	17	12	152776	35	01	152860	35	14	152955	09	17
152683	17	14	152777	19	13	152863	37	22	152956	21	18
152684	21	07	152778	43	27	152864	33	23	152956	33	01
152689	21	07	152780	17	06	152865	17	05	152957	25	17
152690	23	02	152780	17	19	152866	37	21	152957	33	01
152690	57	10	152780	19	16	152869	19	09	152958	09	12
152691	51	30	152781	07	15	152870	49	02	152959	09	06
152692	13	31	152784	35	16	152875	57	10	152967	07	01
152701	51	20	152786	41	16	152876	57	09	152972	51	01
152702	51	07	152788	39	25	152878	49	12	152973	09	04
152703	57	07	152789	45	17	152880	07	02	152974	35	17
152705	07	11	152790	19	01	152881	07	09	152975	35	18
152706	33	02	152791	11	11	152882	07	08	152987	57	07
152707	49	14	152792	11	06	152887	23	13	152987	57	09
152711	27	07	152794	33	04	152889	43	23	152988	29	08
152712	27	05	152795	43	42	152890	21	01	152991	07	03
152715	49	07	152796	19	12	152890	25	01	152991	07	04
152716	25	16	152797	07	13	152893	29	15	152991	07	05
152718	29	16	152799	21	26	152894	35	04	152991	07	06
152719	11	03	152804	09	08	152895	33	19	152991	13	24
152720	57	18	152805	19	05	152896	39	29	152991	13	38
152728	43	38	152807	13	27	152900	37	23	152991	17	05
152729	51	05	152809	51	34	152903	23	02	152991	17	12
152730	13	19	152814	21	14	152903	31	01	152991	19	08
152731	19	22	152815	33	07	152906	17	16	152991	19	11
152732	07	07	152817	23	11	152908	21	27	152991	21	08
152737	39	13	152819	39	07	152909	33	22	152991	21	09
152739	21	13	152823	49	04	152910	35	09	152991	21	12
152740	19	06	152824	49	01	152912	35	11	152991	21	14
152743	19	14	152828	45	08	152913	43	15	152991	23	08
152744	21	22	152833	51	50	152914	43	19	152991	23	10
152746	23	01	152835	43	07	152915	37	27	152991	35	01
152747	51	14	152837	35	13	152917	37	20	152991	35	06
152748	23	12	152838	29	04	152919	19	16	152991	35	07
152749	39	22	152842	21	08	152921	49	09	152991	35	08
152750	43	06	152843	37	24	152922	49	08	152991	35	11
152751	39	21	152844	13	02	152931	51	43	152991	35	12
152753	47	07	152844	15	01	152931	53	01	152991	35	14
152754	27	12	152844	17	01	152934	45	02	152991	35	15

Part No.	Page No.	Ref. No.	Part No.	Page No.	Ref. No.	Part No.	Page No.	Ref. No.	Part No.	Page No.	Ref. No.
152991	35	17	153004	39	27	159814	55	07	650393	33	20
152991	35	18	153006	09	08	170320	55	08	650393	35	08
152991	35	19	153007	05	15	171612	09	23	650393	37	26
152991	37	20	153010	27	09	173702	52	01	650393	37	27
152991	37	21	153011	23	09	173703	52	02	650429	25	07
152991	37	22	153018	13	01	173703	53	09	650429	35	01
152991	37	23	153019	43	41	173704	52	04	650429	35	06
152991	37	24	153020	43	39	173704	53	11	650429	35	07
152991	37	34	153023	49	06	173705	52	08	650449	23	02
152991	39	05	153024	49	03	173706	52	14	650453	07	08
152991	39	15	153025	49	05	500036	19	20	650453	07	09
152991	41	08	153026	13	24	500036	47	17	650453	21	04
152991	41	15	153027	19	08	500036	47	21	650453	25	05
152991	41	18	153027	39	16	500037	19	20	650453	45	04
152991	43	11	153028	37	26	500037	47	18	650454	47	09
152991	43	14	153029	37	23	500037	47	22	650484	19	07
152991	43	18	153030	51	17	500038	47	19	650484	19	13
152991	43	22	153031	49	13	500038	47	23	650484	19	22
152991	43	40	153037	57	10	520013	09	16	650484	29	02
152991	45	10	153038	57	10	520032	33	06	650491	21	07
152991	49	03	153039	35	11	520033	33	05	650491	51	48
152991	49	04	153039	37	20	520046	09	19	650491	51	51
152991	49	05	153040	45	37	520047	09	20	650493	17	16
152991	49	07	153041	39	28	520063	19	03	650494	07	02
152991	49	08	153042	11	15	520084	19	04	650494	11	10
152991	49	09	153045	11	14	520205	17	04	650494	35	14
152991	49	12	153048	11	13	520206	17	03	650494	51	08
152991	51	13	153049	11	16	570002	11	08	650513	25	15
152991	51	16	153050	35	08	570005	11	08	650513	27	11
152991	51	19	153051	11	01	570009	09	06	650533	13	34
152991	51	22	153054	35	17	570009	09	17	650536	35	03
152991	51	25	153054	35	18	570009	17	05	650545	21	25
152991	51	28	153056	25	06	570009	43	05	650549	23	18
152991	51	32	153058	33	16	570014	05	13	650549	55	10
152991	51	49	153069	21	12	603761	31	12	650550	55	11
152991	51	52	153073	05	06	603761	51	21	650554	11	06
152991	57	10	153074	05	05	603761	51	24	650569	07	07
152992	11	10	153077	05	09	603761	51	27	650569	21	18
152993	31	16	153078	05	10	603761	51	31	650569	25	17
152994	31	14	153084	05	11	650172	58	10	650569	45	33
152995	31	13	153840	17	19	650216	17	06	650572	17	18
152997	35	16	156836	55	02	650216	17	19	650585	45	18
152999	09	09	156841	55	03	650219	25	16	650588	23	09
153001	23	12	157123	55	04	650219	43	25	650633	09	06
153002	07	07	157335	55	23	650338	53	13	650633	25	07
153002	09	08	157336	55	22	650371	27	18	650633	43	46
153004	07	08	157980	55	05	650393	19	06	650633	51	35
153004	07	09	158142	55	06	650393	33	04	650681	43	43

Part No.	Page No.	Ref. No.	Part No.	Page No.	Ref. No.	Part No.	Page No.	Ref. No.	Part No.	Page No.	Ref. No.
650687	13	35	650790	35	17	651066	49	09	653010	35	09
650687	19	02	650790	35	18	651066	49	09	653010	39	20
650687	19	05	650790	35	19	651066	49	11	653010	41	07
650687	23	01	650790	37	20	651066	49	11	653010	41	14
650687	37	27	650790	37	21	651066	49	11	653010	43	41
650687	45	28	650790	37	22	651066	49	11	653010	43	42
650695	58	01	650790	37	23	651066	49	12	653010	47	06
650704	13	01	650790	37	24	651066	55	25	653010	49	03
650704	17	14	650790	43	10	651067	55	13	653010	55	17
650704	19	08	650790	43	13	651110	17	05	653015	07	08
650704	19	11	650790	43	16	651110	35	08	653015	07	09
650704	21	08	650790	43	20	651110	35	12	653015	09	08
650704	21	14	650835	23	12	651110	37	21	653015	11	01
650704	35	09	650835	37	29	651110	37	23	653015	11	03
650704	39	02	650815	55	14	651110	37	32	653015	21	12
650704	39	14	650844	09	04	651110	43	39	653015	35	11
650704	39	17	650844	51	39	651110	49	12	653015	35	12
650704	41	04	650868	51	02	651135	55	09	653015	35	15
650704	41	11	650946	21	06	651323	35	09	653015	35	17
650704	43	17	651023	07	11	651456	55	15	653015	35	18
650704	43	21	651023	37	32	652057	35	16	653015	35	19
650704	43	41	651028	07	08	652059	19	18	653015	37	20
650704	43	42	651028	07	09	652088	43	28	653015	37	21
650704	45	09	651028	09	08	652099	07	05	653015	37	23
650704	47	03	651028	37	23	652099	07	06	653018	07	07
650704	49	07	651064	13	12	652146	11	03	653018	07	08
650704	51	12	651066	17	12	652146	21	12	653018	07	09
650704	51	18	651066	41	03	652146	35	11	653018	09	06
650745	45	12	651066	41	10	652146	35	12	653018	11	10
650754	35	08	651066	41	17	652146	35	15	653018	13	12
650754	37	28	651066	43	40	652146	35	19	653018	21	04
650773	57	10	651066	49	02	652146	37	20	653018	21	11
650774	45	23	651066	49	03	652146	37	21	653018	21	18
650781	19	02	651066	49	03	653005	21	06	653018	25	05
650781	19	05	651066	49	03	653005	23	12	653018	25	07
650786	07	03	651066	49	03	653007	19	02	653018	25	17
650786	07	04	651066	49	03	653007	19	05	653018	35	14
650786	23	08	651066	49	04	653007	21	25	653018	37	25
650786	23	10	651066	49	05	653007	45	14	653018	43	31
650786	25	09	651066	49	05	653007	55	16	653018	43	47
650786	39	03	651066	49	05	653010	13	01	653018	45	07
650786	51	15	651066	49	05	653010	13	34	653018	45	21
650790	13	24	651066	49	05	653010	17	13	653018	45	26
650790	21	12	651066	49	05	653010	17	14	653018	45	34
650790	35	11	651066	49	07	653010	17	16	653018	47	12
650790	35	12	651066	49	08	653010	19	18	653019	57	04
650790	35	14	651066	49	08	653010	19	19	653019	57	05
650790	35	15	651066	49	09	653010	25	09	653021	58	04

Part No.	Page No.	Ref. No.	Part No.	Page No.	Ref. No.	Part No.	Page No.	Ref. No.	Part No.	Page No.	Ref. No.
653026	58	05	654009	13	13	654026	35	09	654030	57	05
653038	17	06	654009	13	21	654026	39	19	654032	58	03
653038	17	19	654009	21	11	654026	41	06	654034	58	06
653038	25	16	654009	23	16	654026	41	13	655006	13	19
653038	43	26	654009	25	07	654026	43	41	655006	13	31
653038	43	38	654009	35	11	654026	43	42	655006	23	16
653044	13	12	654009	37	20	654026	47	05	655008	17	08
653044	29	04	654009	43	29	654026	55	19]	655008	29	13
653045	13	02	654009	43	49	654028	07	08	655010	13	02
653102	09	22	654009	45	05	654028	07	09	655014	29	06
654002	23	09	654009	45	19	654028	09	08	655016	21	11
654004	07	11	654009	45	24	654028	11	03	655018	07	12
654004	17	13	654009	47	10	654028	21	12	655018	09	22
654004	21	25	654009	47	15	654028	35	11	655020	11	05
654004	35	16	654009	57	04	654028	35	12	655020	51	42
654004	39	18	654009	57	05	654028	35	15	655028	21	17
654004	57	04	654012	07	18	654028	35	17	655537	43	24
654004	57	05	654012	17	18	654028	35	18	660000	33	08
654004	57	10	654014	07	12	654028	35	19	660065	29	05
654005	13	01	654014	58	07	654028	37	20	180-20637	29	17
654005	17	15	654022	21	06	654028	37	21	210-19470	13	35
654005	19	18	654024	19	02	654028	37	23	210-19470	19	02
654005	25	09	654024	21	25	654030	11	10	210-19470	19	06
654005	35	02	654024	33	04	654030	21	04	210-19470	19	07
654005	35	07	654024	33	20	654030	21	18	210-19470	19	13
654005	35	09	654024	45	13	654030	25	05	210-19470	19	22
654005	37	32	654024	55	18	654030	25	07	210-19470	23	01
654005	41	05	654024	57	04	654030	25	17	210-19470	25	06
654005	41	12	654024	57	05	654030	43	30	210-19470	35	08
654005	43	43	654026	13	01	654030	43	48	210-19470	37	27
654005	45	38	654026	13	34	654030	45	06	210-19470	37	28
654005	47	04	654026	17	14	654030	45	20	210-19470	45	29
654005	51	54	654026	17	16	654030	45	25	210-19470	57	04
654009	07	03	654026	19	18	654030	47	11	210-19470	57	05
654009	07	04	654026	19	19	654030	51	09	210-19470	57	07
654009	07	05	654026	25	07	654030	51	36	210-19470	57	09
654009	07	06	654026	25	09	654030	57	04	210-19470	57	10

Part No.	Page No.	Ref. No.	Part No.	Page No.	Ref. No.	Part No.	Page No.	Ref. No.	Part No.	Page No.	Ref. No.

NOTES:

Part No.	Page No.	Ref. No.	Part No.	Page No.	Ref. No.	Part No.	Page No.	Ref. No.	Part No.	Page No.	Ref. No.

NOTES:

O-RING TABLE

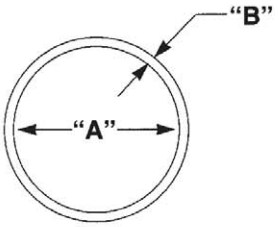

FITTING THREAD SIZE	DIAMETER "A"	DIAMETER "B"	GEHL PART NUMBER
9/16 - 18	0.468	0.078	055897
3/4 - 16	0.644	0.087	055896
7/8 - 14	0.755	0.097	055898
1-1/16 - 12	0.924	0.116	048953
1-5/16 - 12	1.171	0.116	058674
1-5/8 - 12	1.475	0.118	077970

Recommended Coupling & Adapter Installation Torque Specifications

For SAE "O" Ring Boss (Steel)

Size		Ft-Lbs (N·m)	
Dash	Fractional (In.)	Minimum	Maximum
-3	3/16	8 (11)	10 (14)
-4	1/4	14 (19)	16 (22)
-5	5/16	18 (24)	20 (27)
-6	3/8	24 (33)	26 (35)
-8	1/2	50 (68)	60 (81)
-10	5/8	72 (98)	80 (108)
-12	3/4	125 (169)	135 (183)
-14	7/8	160 (217)	180 (244)
-16	1	200 (271)	220 (298)
-20	1-1/4	210 (285)	280 (380)
-24	1-1/2	270 (366)	360 (488)

For JIC 37° and 45° (Machined or Flared)

Steel			
Size		Ft-Lbs (N·m)	
Dash	Fractional (In.)	Minimum	Maximum
-4	1/4	10 (14)	11 (15)
-5	5/16	13 (18)	15 (20)
-6	3/8	17 (23)	19 (26)
-8	1/2	34 (46)	38 (52)
-10	5/8	50 (68)	56 (76)
-12	3/4	70 (95)	78 (106)
-16	1	94 (127)	104 (141)
-20	1-1/4	124 (168)	138 (187)
-24	1-1/2	156 (212)	173 (235)
-32	2	219 (297)	243 (330)

TORQUE SPECIFICATIONS

NOTE: *Use these torque values when tightening* ***GEHL*** *hardware (excluding: locknuts and self-tapping, thread forming and sheet metal screws) unless specified otherwise.*

All torque values are in Lb-Ft except those marked with an * which are Lb-In
(For metric torque value Nm, multiply Lb-Ft value by 1.355 or Lb-In value by 0.113)

Unified National Thread	Grade 2		Grade 5		Grade 8	
	Dry	Lubed	Dry	Lubed	Dry	Lubed
8-32	19*	14*	30*	22*	41*	31*
8-36	20*	15*	31*	23*	43*	32*
10-24	27*	21*	43*	32*	60*	45*
10-32	31*	23*	49*	36*	68*	51*
1/4-20	66*	50*	9	75*	12	9
1/4-28	76*	56*	10	86*	14	10
5/16-18	11	9	17	13	25	18
5/16-24	12		19	14		20
3/8-16	20	15	30	23	45	35
3/8-24	23	17	35	25	50	
7/16-14	32	24	50	35	70	55
7/16-20	36	27	55	40	80	60
1/2-13	50	35	75	55	110	80
1/2-20	55	40	90	65	120	90
9/16-12	70	55	110	80	150	110
9/16-18	80	60	120	90	170	130
5/8-11	100	75	150	110	220	170
5/8-18	110	85	180	130	240	180
3/4-10	175	130	260	200	380	280
3/4-16	200	150	300	220	420	320
7/8-9	170	125	430	320	600	460
7/8-14	180	140	470	360	660	500
1-8	250	190	640	480	900	680
1-14	270	210	710	530	1000	740
Metric Course Thread	**Grade 8.8**		**Grade 10.9**		**Grade 12.9**	
	Dry	Lubed	Dry	Lubed	Dry	Lubed
M6-1	8	6	11	8	13.5	10
M8-1.25	19	14	27	20	32.5	24
M10-1.5	37.5	28	53	39	64	47
M12-1.75	65	48	91.5	67.5	111.5	82
M14-2	103.5	76.5	145.5	108	176.5	131
M16-2	158.5	117.5	223.5	165.5	271	200

Gehl Company, 143 Water Street, P.O. Box 179, West Bend, WI 53095-0179 U.S.A.
www.gehl.com

907543/BP0704
©2004 GEHL Company. All Rights Reserved.
Printed in U.S.A.