Form No.
908171

GE1202 Compact Excavator

PARTS MANUAL

GEHL®

Introduction

When ordering service parts, specify the correct part number, full description, quantity required, the unit model number and serial number. For your safety and continued proper operation, use only genuine GEHL service parts.

The model and serial number for this unit are on a tag located on a panel on the front of the cabin.

‘‘Right’’ and ‘‘left’’ are determined from a position sitting on the seat and facing forward. From this position, the cab is on the ‘‘left’’ and the hydraulic valve compartment is on the ‘‘right’’.

GEHL® Company reserves the right to make changes or improvements in the design or construction of any part of the unit without incurring the obligation to install such changes on any previously delivered units.

Refer to the abbreviations table located on this page for the various fastener descriptions. Standard attaching hardware torque values are also provided on the inside back cover. Metric torque values shown in the illustrations are in Newton-meters and can be converted to Foot-pounds by multiplying by 0.738.

In the exploded view parts list, Reference Numbers may have additional information following the Reference Number.

Unless otherwise specified, all Cap Screws or Bolts are Grade 5, cadmium or zinc plated; Hexagon Nuts for Grade 5 Screws or Bolts are Grade B; Hexagon Nuts for other Screws or Bolts are Grade A.

NOTE: *The following abbreviations may be used herein:*

CP	– Cotter Pin
CS	– Cap Screw (Hexagon Head)
FHCS	– Flat Head Cap Screw
HN	– Hex Nut
LN	– Lock Nut
LT	– Left Hand
M	– Metric
MM/mm	– Millimeter
RT	– Right

TABLE OF CONTENTS

Introduction ..... Inside Front Cover
Decal Locations 2–7
Undercarriage, Steel Tracks 8
Bottom Roller 9
Top Roller 10
Steel Track 11
Track Tensioner 12
Undercarriage, Rubber Track 13
Roller 14
Track Tensioner, Rubber Track 15
Dozer Blade 16
Upper Carriage 17
Chassis Cover 18
Lubrication 19
Rear Wall 20
Side Cover 21
Counterweight 22
Hood 23
Valve Body Cover 24
Tank Cover 25
Boom Arm 26
Dipper Arm 27
Connecting Link 28
Cabin Frame 29
Cabin Frame 2 30
Cabin Frame 3 31
Main Harness 32
Windshield 33
Cabin Windows 34
Sliding Side Window 35
Cabin Door 36
Cabin Mats 37
Heater 38
Seat 39
Heater Box 40
Engine Fan, Water Pump & Thermostat 41
Gasket Set & Cylinder Hone 42
Engine Alternator & Starter 43
Oil Filter & Pan 44
Fuel Tank 45
Fuel Injection System 46–47
Fuel Pump 48
Hand Throttle 49
Motor Mounts 50
Radiator 51
Air Cleaner 52
Exhaust 53
Hydraulic Pump Drive 54
Hydraulic Oil Tank 55
Hydraulic Pump 56–57
Track Drive 58
Swivel Joint 59
Swivel Joint Breakdown 60
Swivel Drive 61
Main Control Valve 62–64
Double Control Valve 65
Pilot Supply Unit 66
Stop Valve 67
Selection Valve 68
Valve 69
Distribution Block 70
Hand Controls 71
Travel Valve 72
Dozer Valve 73
Auxiliary Hydraulics Valve 74
Boom Cylinder 75
Dipper Cylinder 76
Bucket Cylinder 77
Dozer Cylinder 78
Boom Offset Cylinder 79
Hoses, Oil Cooler 80
Hoses, Hydraulic Pump 81
Hoses, Track Drive 82
Hoses, Hydraulic Pump 83
Hoses, Control Return Valves 84
Hoses, Boom Offset Cylinder 85
Hoses, Dozer Blade Cylinder 86
Hoses, Auxiliary Hydraulics 87
Hoses, Hand Controls 88
Hoses, Check Valves 89
Hoses, Boom 90
Hoses, Boom Cylinders 91
Hoses, Dipper Arm 92–93
Hoses, Stall Warning Device 94
Electrical, Battery & Mount 95
Electrical, Engine Harness 96
Electrical, Chassis Harness 97
Electrical, Left Armrest 98
Electrical Right Armrest 99
Electrical, Relay Plate 100
Electrical, Lights 101
Electrical, Boom Work Light 102
Tool Kit 103
Alphabetical Index 104–105
Numerical Index 106–115
Torque Chart ..... Inside Rear Cover

DECAL LOCATIONS

GENERAL INFORMATION

Decal location information is provided to assist in the proper selection and application of new decals, in the event the original decals become damaged or the machine is repainted. Refer to the listing for the illustration reference number, part number, description and quantity of each decal provided in the kit. Refer to the appropriate illustrations for replacement locations.

To ensure proper selection of the correct replacement decals, compare all of the various closeup location drawings to your machine before starting to refinish the unit. Then circle each shown decal (applicable to your machine) while checking off its part number in the listing. After you have verified all the decals needed for replacement, place any extra unnecessary decals aside for disposal.

NOTE: *Refer to the SAFETY chapter of the Operator's Manual for the specific information provided on all of the various safety decals furnished in the decal kit(s).*

NEW DECAL APPLICATION

Surfaces MUST be free from dirt, dust, grease and other foreign material before applying the new decal. To apply, remove the smaller portion of the decal backing paper and apply this part of the exposed adhesive backing to the clean surface while maintaining proper position and alignment. Peel the other portion of the backing paper off slowly while applying hand pressure to smooth out the decal surface.

CAUTION

ALWAYS follow safety precautions on decals. Replace the decals if they are damaged, or if the unit is repainted. If repainting, BE SURE all applicable decals are affixed to your unit.

PAINT NOTICE

Use this list to order paint for refinishing:

906213	**One Gal. Construction Yellow**
906323	**One Qt. Charcoal Grey**
906317	**One Gal. Charcoal Grey**
906214	**6 (12 oz. Spray Cans) Yellow**
906318	**6 (12 oz. Spray Cans) Grey**

The decal kit for the GE1202 Compact Excavator is listed below:

Ref. No.	Part No.	Description & Quantity
	164652	Decal Kit - **GE1202**
1	161965	Diesel Fuel
2	161966	Hydraulic Oil
3	161967	Lubrication
4	161969	WARNING – Hydraulic Reservoir
5	161970	Arrow (2 places)
6	161981	Lift Point (4 places)
7	161982	Tiedown Point (4 places)
8	161985	WARNING – Keep Away (2 places)
9	161986	WARNING – Read Manual
10	161987	WARNING – Engine Fan
11	162449	Dozer Blade
12	162450	Travel – Left
13	162451	Travel – Right
14	162452	Right Joystick Control
15	162453	Left Joystick Control
16	162824	Left Graphic
17	162825	Right Graphic
18	162832	Hydraulics Compartment Latch (2 places)
19	163973	WARNING – Mandatory Shutdown
20	163974	Manual Throttle
21	163975	WARNING – Avoid Injury
22	163976	WARNING – Avoid Injury
23	163977	WARNING – Entanglement Hazard
24	163978	WARNING – Hot Surface
25	163979	Valve Position
26	163980	Joystick Throttle
27	164853	Engine Compartment Latch
28	164854	WARNING – Avoid Injury
29	164858	IMPORTANT – Do Not Pressure Wash
30	160394	Color Bar (2 places)
31	119661	GEHL
32	122288	GEHL (2 places)
33	122735	GEHL
34	135896	GEHL (2 places)
35	160893	GE1202 (2 places)

WARNING
19

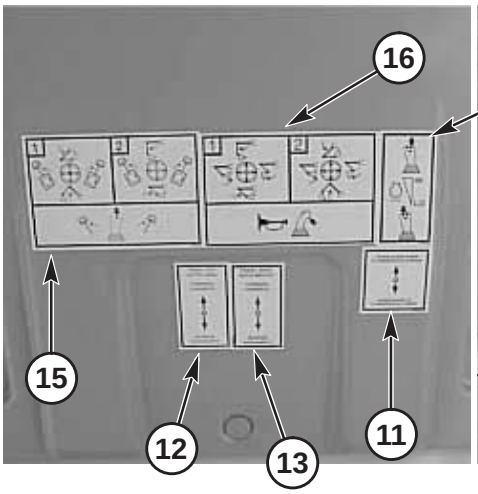
16
26
15
12
13
11

WARNING
22

t

WARNING
TO AVOID INJURY
28

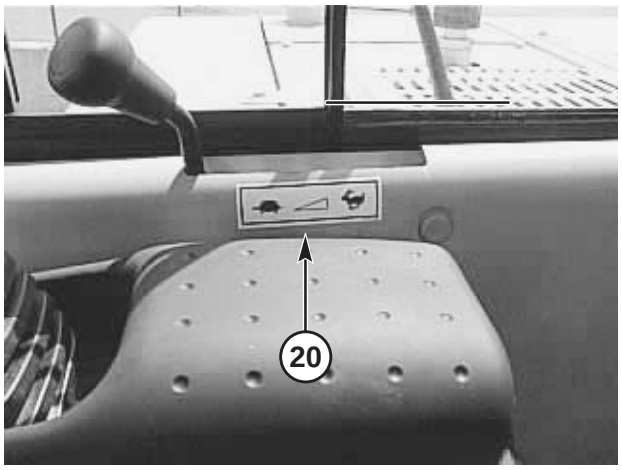
20

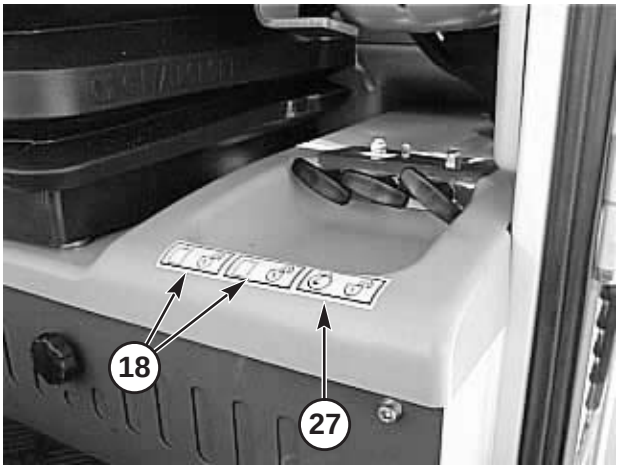
18
27

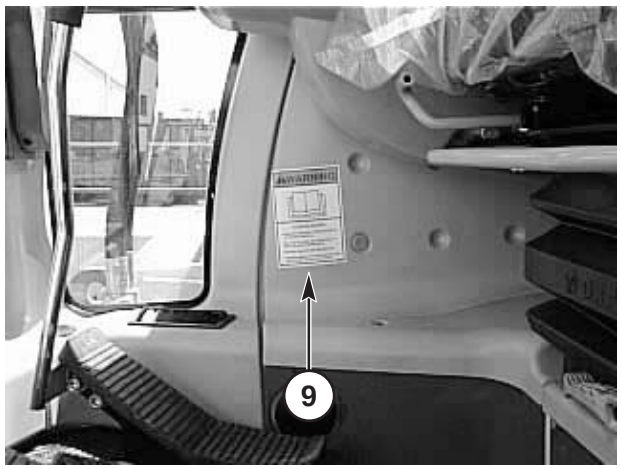
9

The decal listing has been repeated for your convenience. The decal kit for the GE1202 Compact Excavator is listed below:

Ref. No.	Part No.	Description & Quantity
	164652	Decal Kit - **GE1202**
1	161965	Diesel Fuel
2	161966	Hydraulic Oil
3	161967	Lubrication
4	161969	WARNING – Hydraulic Reservoir
5	161970	Arrow (2 places)
6	161981	Lift Point (4 places)
7	161982	Tiedown Point (4 places)
8	161985	WARNING – Keep Away (2 places)
9	161986	WARNING – Read Manual
10	161987	WARNING – Engine Fan
11	162449	Dozer Blade
12	162450	Travel – Left
13	162451	Travel – Right
14	162452	Right Joystick Control
15	162453	Left Joystick Control
16	162824	Left Graphic
17	162825	Right Graphic
18	162832	Hydraulics Compartment Latch (2 places)
19	163973	WARNING – Mandatory Shutdown
20	163974	Manual Throttle
21	163975	WARNING – Avoid Injury
22	163976	WARNING – Avoid Injury
23	163977	WARNING – Entanglement Hazard
24	163978	WARNING – Hot Surface
25	163979	Valve Position
26	163980	Joystick Throttle
27	164853	Engine Compartment Latch
28	164854	WARNING – Avoid Injury
29	164858	IMPORTANT – Do Not Pressure Wash
30	160394	Color Bar (2 places)
31	119661	GEHL
32	122288	GEHL (2 places)
33	122735	GEHL
34	135896	GEHL (2 places)
35	160893	GE1202 (2 places)

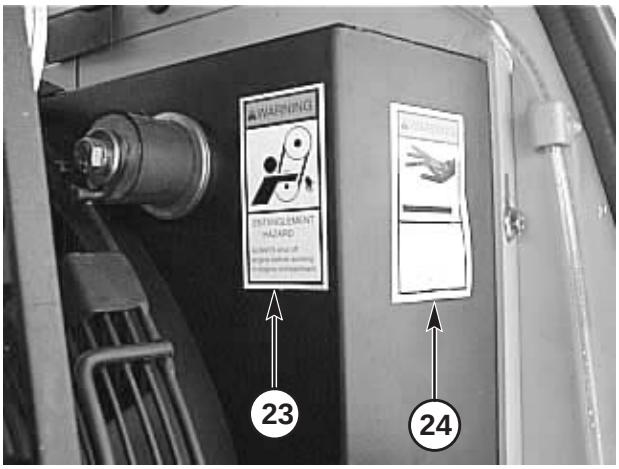
WARNING
23
24

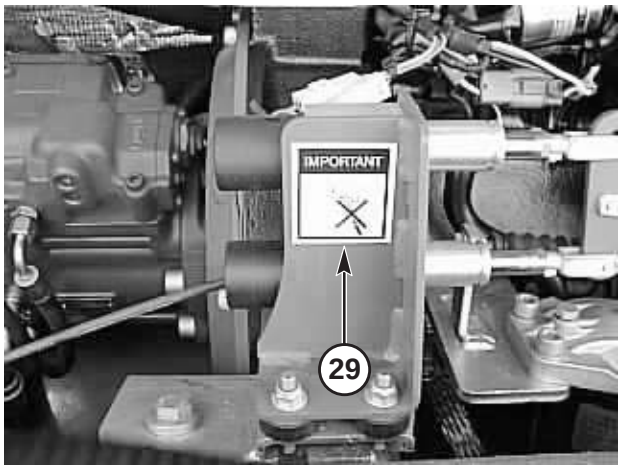
IMPORTANT
29

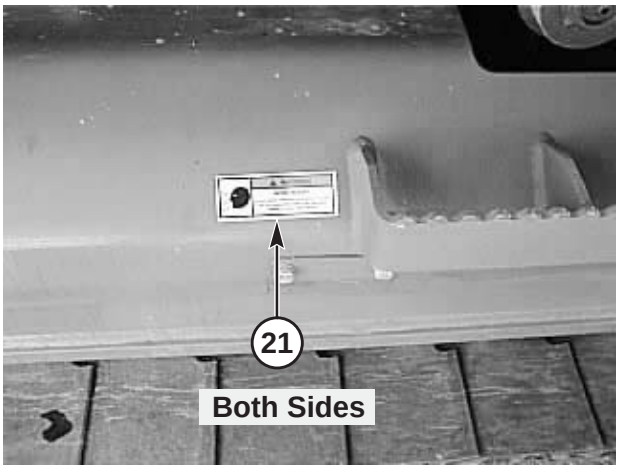
21
Both Sides

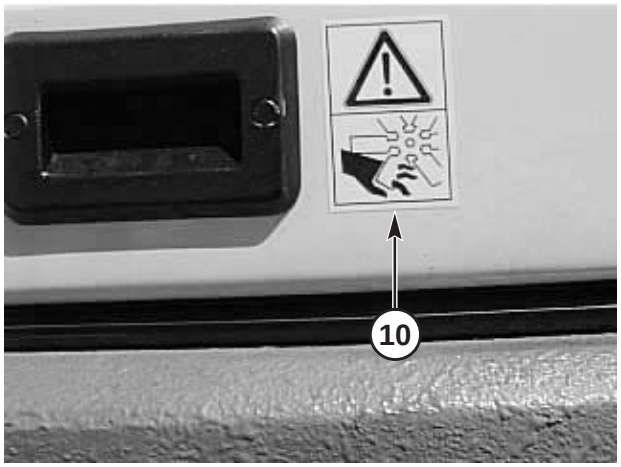
10

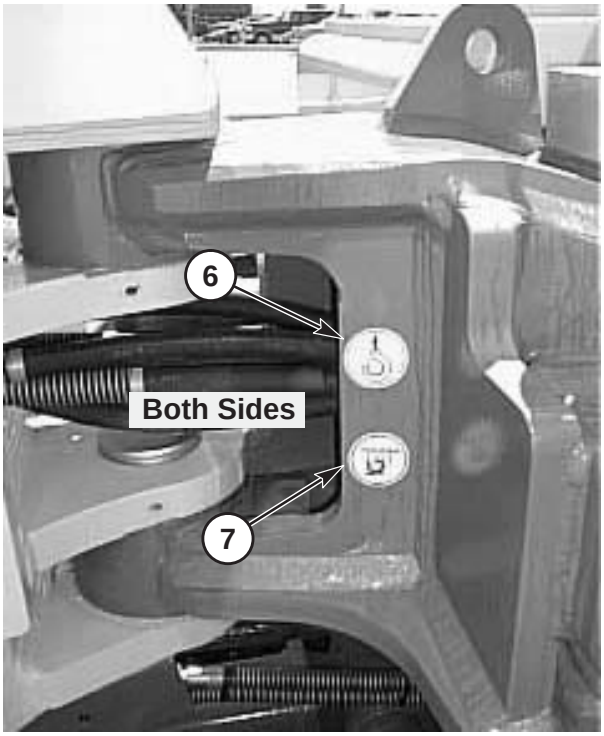
6
Both Sides
7

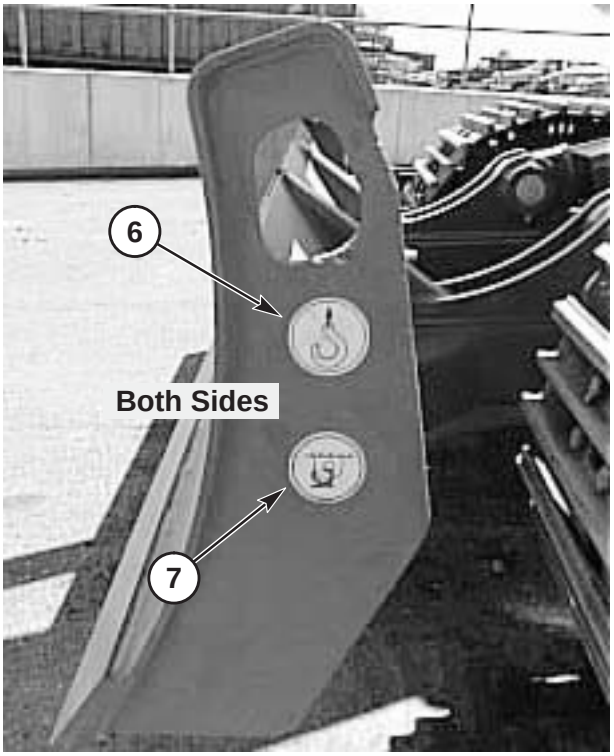
6
Both Sides
7

The decal listing has been repeated for your convenience. The decal kit for the GE1202 Compact Excavator is listed below:

Ref. No.	Part No.	Description & Quantity
	164652	Decal Kit - **GE1202**
1	161965	Diesel Fuel
2	161966	Hydraulic Oil
3	161967	Lubrication
4	161969	WARNING – Hydraulic Reservoir
5	161970	Arrow (2 places)
6	161981	Lift Point (4 places)
7	161982	Tiedown Point (4 places)
8	161985	WARNING – Keep Away (2 places)
9	161986	WARNING – Read Manual
10	161987	WARNING – Engine Fan
11	162449	Dozer Blade
12	162450	Travel – Left
13	162451	Travel – Right
14	162452	Right Joystick Control
15	162453	Left Joystick Control
16	162824	Left Graphic
17	162825	Right Graphic
18	162832	Hydraulics Compartment Latch (2 places)
19	163973	WARNING – Mandatory Shutdown
20	163974	Manual Throttle
21	163975	WARNING – Avoid Injury
22	163976	WARNING – Avoid Injury
23	163977	WARNING – Entanglement Hazard
24	163978	WARNING – Hot Surface
25	163979	Valve Position
26	163980	Joystick Throttle
27	164853	Engine Compartment Latch
28	164854	WARNING – Avoid Injury
29	164858	IMPORTANT – Do Not Pressure Wash
30	160394	Color Bar (2 places)
31	119661	GEHL
32	122288	GEHL (2 places)
33	122735	GEHL
34	135896	GEHL (2 places)
35	160893	GE1202 (2 places)

GEHL
31

33
GEHL
GE1202
3

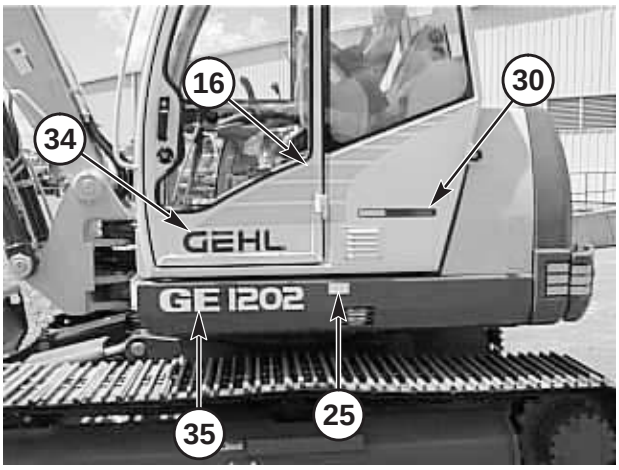
16
30
34
GEHL
GE 1202
35
25

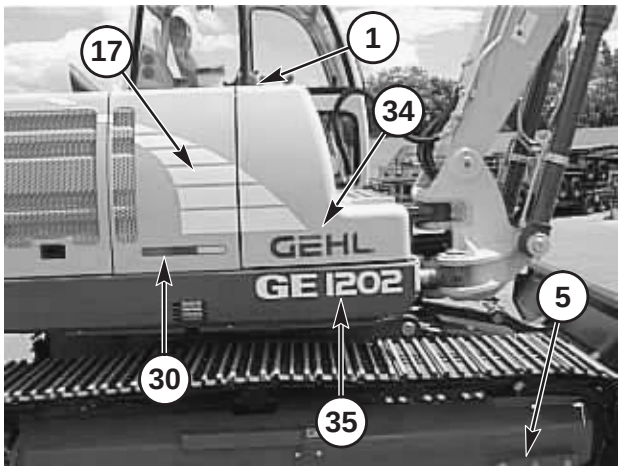
17
1
34
GEHL
GE 1202
5
30
35

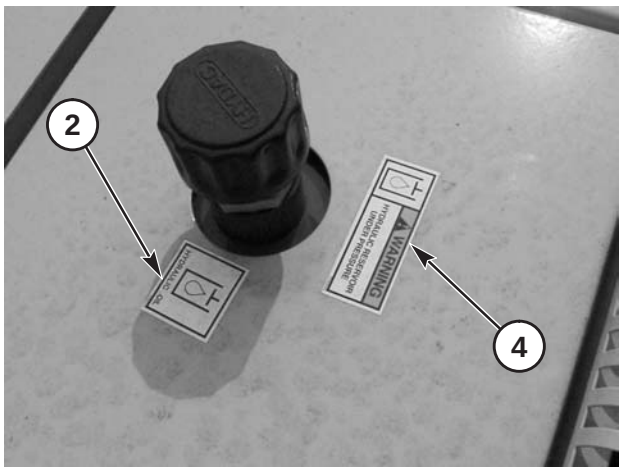
2
WARNING
4

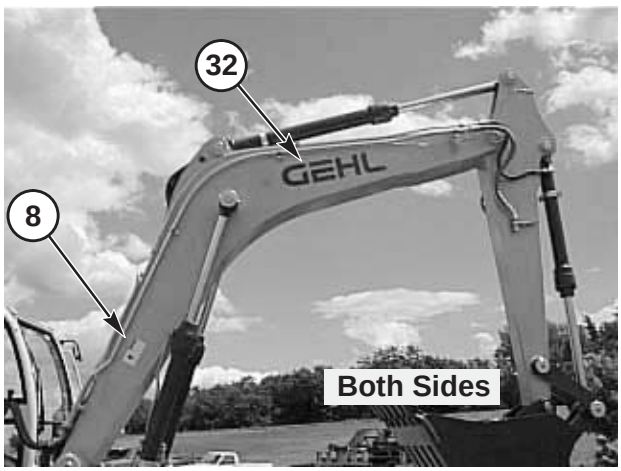
32
GEHL
8
Both Sides

GE1202 – UNDERCARRIAGE, STEEL TRACKS

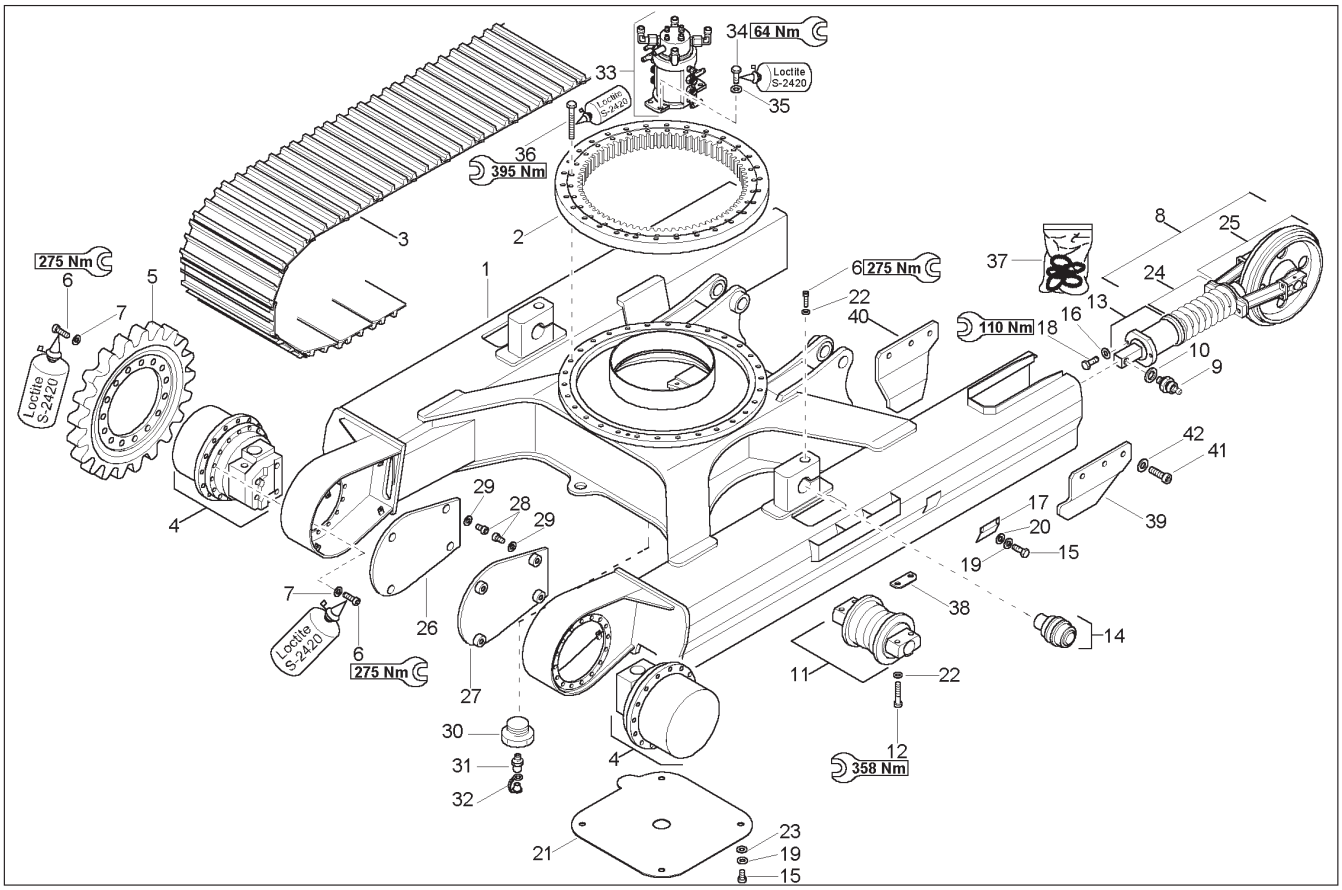

Ref. No.	Part No.	Description	Qty. Req.
1	164236	UNDERCARRIAGE	1
2	164241	TURNTABLE	1
3	164120	STEEL CHAIN	2
4	164190	TRACK DRIVE UNIT	2
5	164118	SPROCKET	2
6	651497	SHCS HS M16–1.5 X 50 10.9	62
7	161637	WASHER/NORD–LOCK NL 16 STUCK	62
8	164116	TRACK TENSIONING COMPLETE	2
9	160638	NON RETURN VALVE	2
10	160865	SCREW SEAL	2
11	164119	ROLLER COMPLETE	12
12	164900	SCREW	48
13	160886	TENSION CYLINDER	2
14	164242	ROLLER COMPLETE	2
15	651391	CS M10–1.5 X 20 C 8.8	8
16	161643	WASHER/ROUND	4
17	164113	COVER	2
18	651487	SHCS HS M12–1.7 X 50 10.9	4
19	161669	RING/SNAP S10	8
20	161663	WASHER/GR A 10.5	4
21	164237	COVER	1
22	161637	WASHER/NORD–LOCK NL 16	50
23	161640	WASHER/GR A 10.5	4
24	164177	SPRING SET	2
25	164178	TENSION WHEEL + SLIDE PART	2
26	164112	COVER LEFT	1
27	164111	COVER RIGHT	1
28	651515	SHCS HS M8–1.2 X 20 8.8	8
29	161676	RING/SNAP S8	8
30	161417	PLUG	1
31	161412	LUBRICATION NIPPLE	1
32	161416	PROTECTION CAP	1
33	163068	SECTION	1
34	651395	CS M10–1.5 X 30 C 10.9	4
35	161635	WASHER/NORD–LOCK NL 10	4
36	164910	SCREW	36
37	160945	SEALS TRACK TENSION CYL.	2
38	164238	BRACKET	24
39	164240	CHAIN GUARD LEFT	2
40	164239	CHAIN GUARD RIGHT	2
41	161647	WASHER/ROUND HI–TENS 17	12
42	164900	SCREW	12

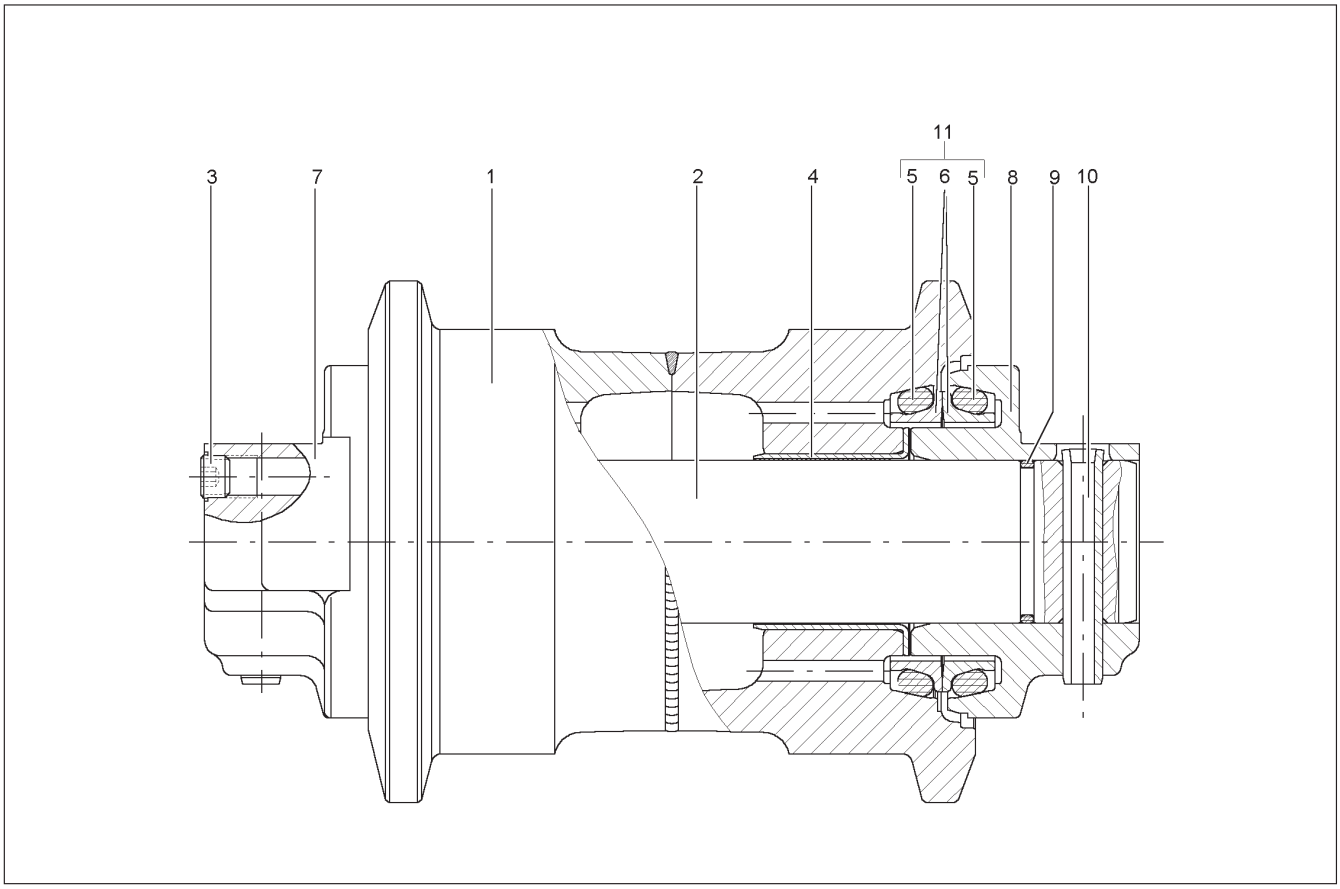

Ref. No.	Part No.	Description	Qty. Req.
01	164130	ROLLER	1
02	164129	SHAFT	1
03	163178	SHAFT	1
04	164128	BUSHING	1
05	164127	O–RING	2
06	164126	SEAL	2
07	164125	BRACKET	1
08	164124	BRACKET	1
09	164123	O–RING	1
10	164122	COTTER PIN	2
11	164121	SEAL KIT	1

GE1202 – TOP ROLLER

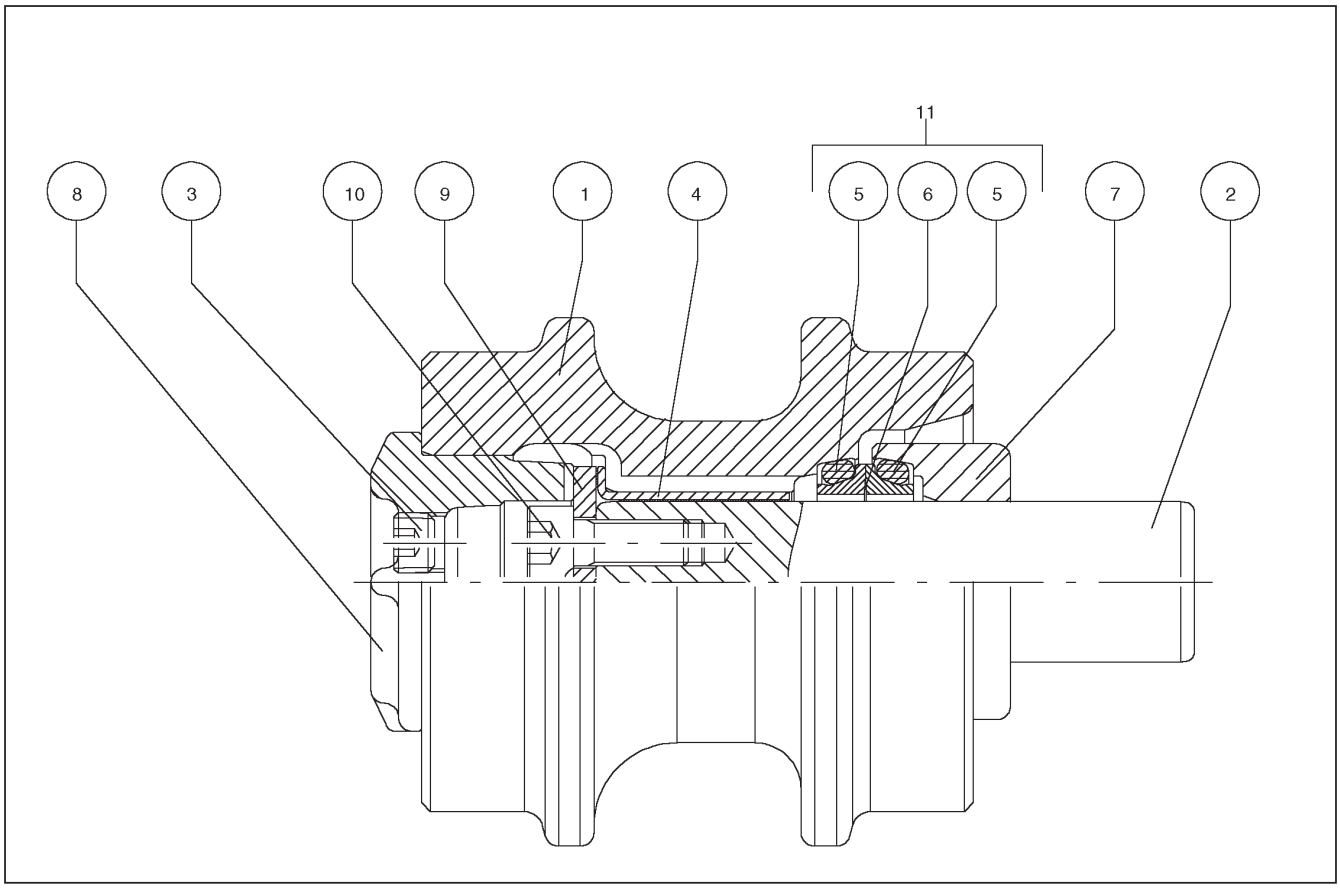

Ref. No.	Part No.	Description	Qty. Req.
01	164133	ROLLER	1
02	163177	ROLLER	1
03	163178	SHAFT	1
04	163179	PLUG	1
05	164244	O–RING	2
06	164245	SEAL	2
07	163182	SEAL	1
08	164132	COVER	1
09	163184	COVER	1
10	163185	WASHER	2
11	164131	SEAL KIT	1

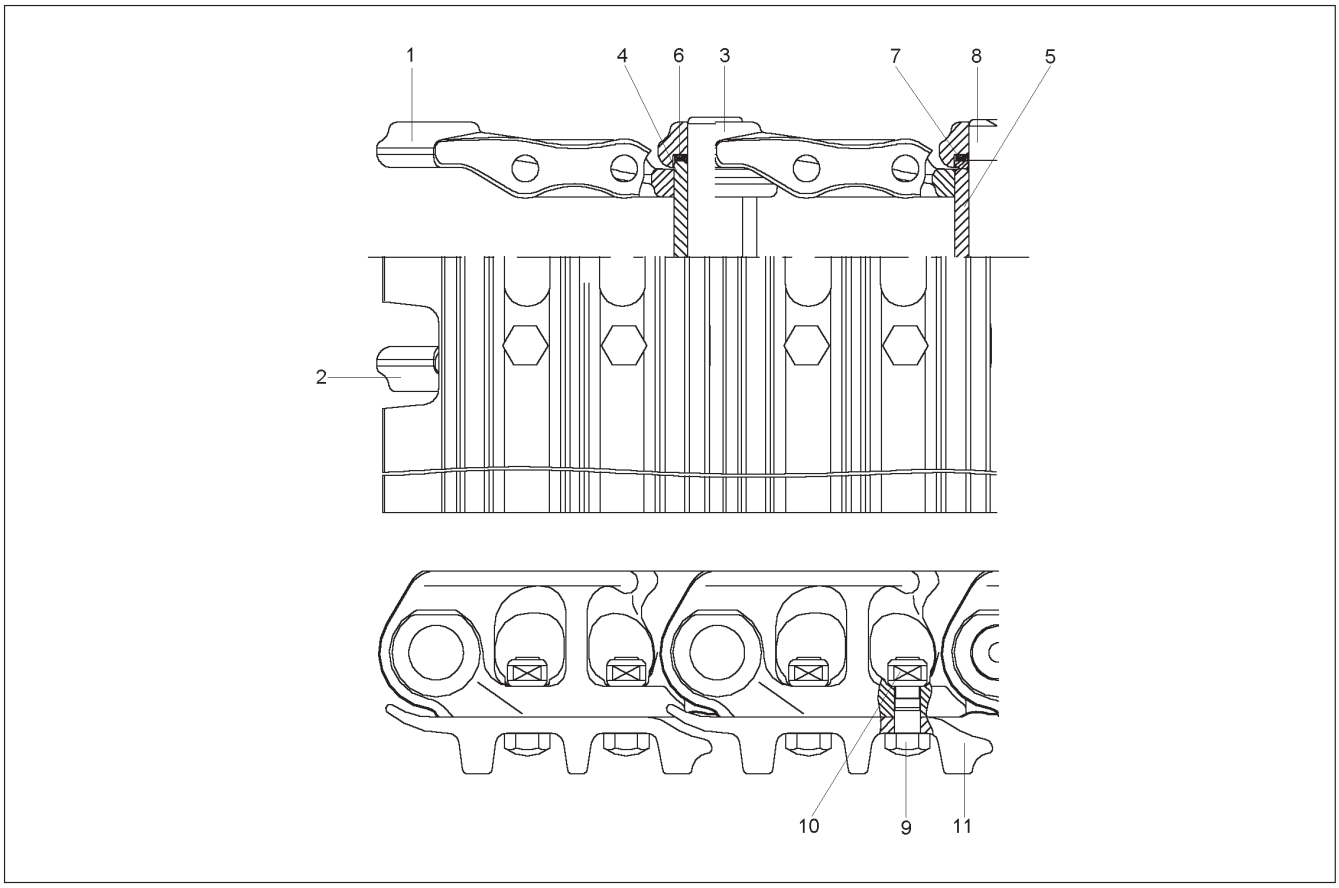

Ref. No.	Part No.	Description	Qty. Req.
01	164143	LINK RIGHT	45
02	164142	LINK LEFT	45
03	164141	PIN	44
04	164140	BUSHING	44
05	164139	BUSHING	1
06	164138	SEAL	180
07	164137	WASHER	2
08	164136	PIN	1
09	164135	SCREW	180
10	164134	NUT	180
11	164243	BOTTOM COVER	45

GE1202 – TRACK TENSIONER

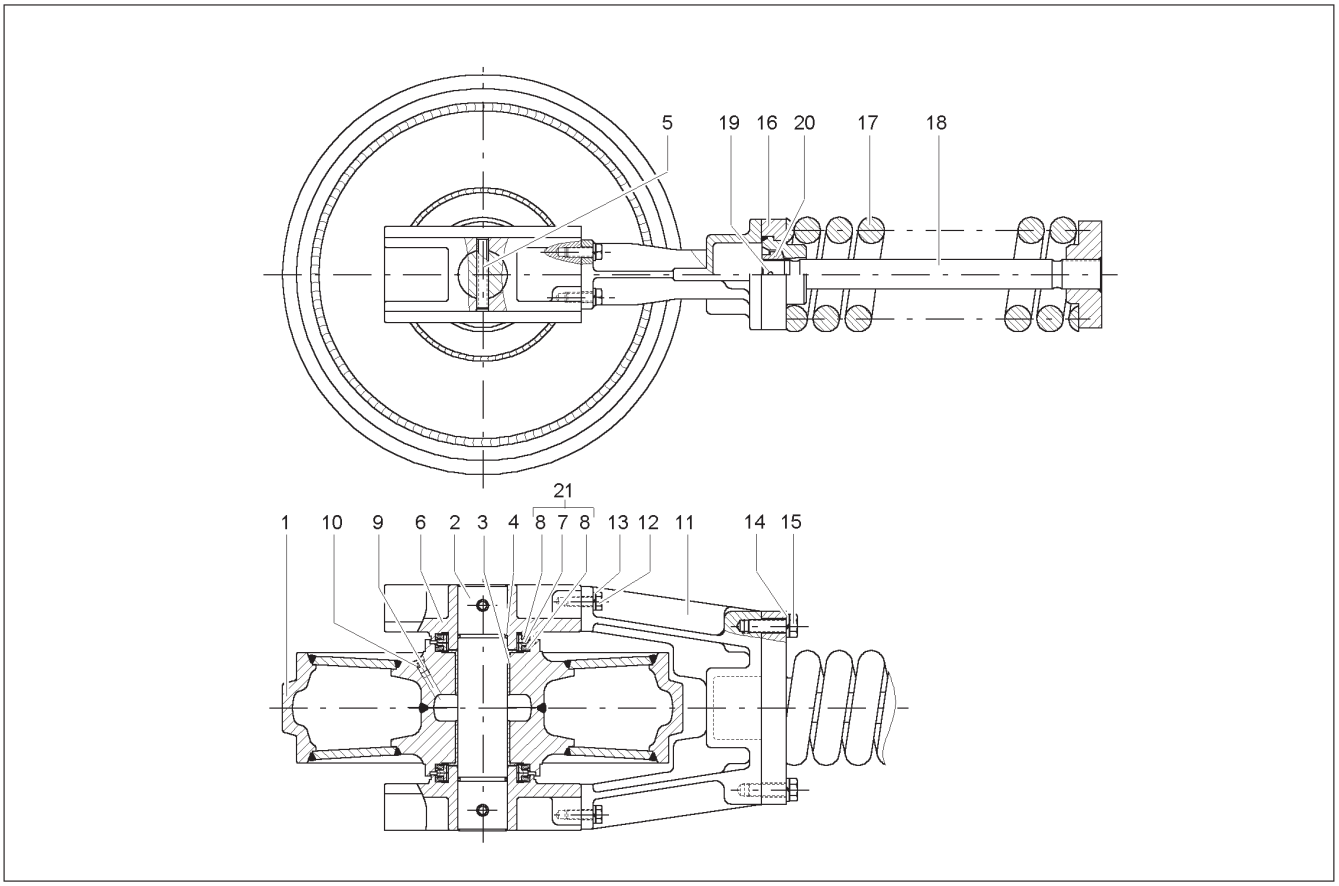

Ref. No.	Part No.	Description	Qty. Req.
1	164162	TENSION WHEEL	1
2	164161	SHAFT	1
3	164160	BUSHING	2
4	164159	SEAL	2
5	164158	COTTER PIN	2
6	164157	BRACKET	2
7	164156	SEAL	4
8	164155	O–RING	4
9	164154	PLUG	1
10	164153	SEAL	1
11	164152	FORK	1
12	164151	SCREW	4
13	162751	PLUG	4
14	164150	WASHER	2
15	164149	SCREW	2
16	164148	PLATE	1
17	164147	SPRING	1
18	164146	BRACKET	1
19	164145	COTTER PIN	1
20	164163	NUT	1
21	164144	SEAL KIT	1

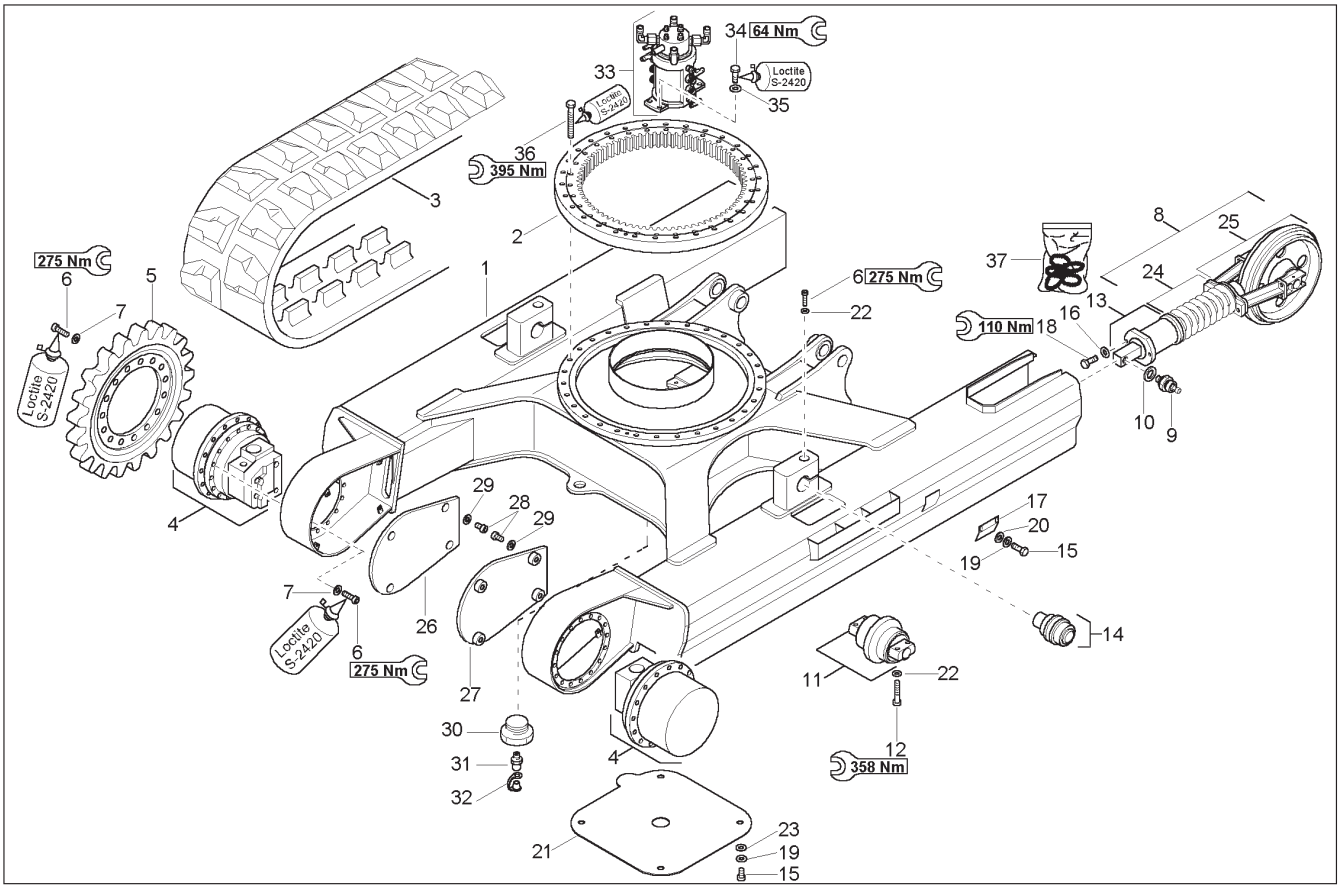

Ref. No.	Part No.	Description	Qty. Req.
01	164236	UNDERCARRIAGE	1
02	164241	TURNTABLE	1
03	164117	RUBBER CHAIN	2
04	164190	TRACK DRIVE UNIT	2
05	164110	SPROCKET	2
06	651497	SHCS HS M16–1.5 X 50 10.9	64
07	161637	WASHER/NORD–LOCK NL 16 STUCK	64
08	164115	TRACK TENSIONING COMPLETE	2
09	160638	NON RETURN VALVE	2
10	160865	SCREW SEAL	2
11	164114	ROLLER COMPLETE	12
12	164900	SCREW	48
13	160886	TENSION CYLINDER	2
14	164242	ROLLER COMPLETE	2
15	651391	CS M10–1.5 X 20 C 8.8	8
16	161643	WASHER/ROUND	4
17	164113	COVER	2
18	651487	SHCS HS M12–1.7 X 50 10.9	4
19	161669	RING/SNAP S10	8
20	161663	WASHER/GR A 10.5	4
21	164237	COVER	1
22	161637	WASHER/NORD–LOCK NL 16	50
23	161640	WASHER/GR A 10.5	4
24	164179	SPRING SET	2
25	164180	TENSION WHEEL + SLIDE PART	2
26	164112	COVER LEFT	1
27	164111	COVER RIGHT	1
28	651515	SHCS HS M8–1.2 X 20 8.8	8
29	161676	RING/SNAP S8	8
30	161417	PLUG	1
31	161412	LUBRICATION NIPPLE	1
32	161416	PROTECTION CAP	1
33	163068	SECTION	1
34	651395	CS M10–1.5 X 30 C 10.9	4
35	161635	WASHER/NORD–LOCK NL 10	4
36	164910	SCREW	36
37	160945	SEALS TRACK TENSION CYL.	2

GE1202 – ROLLER

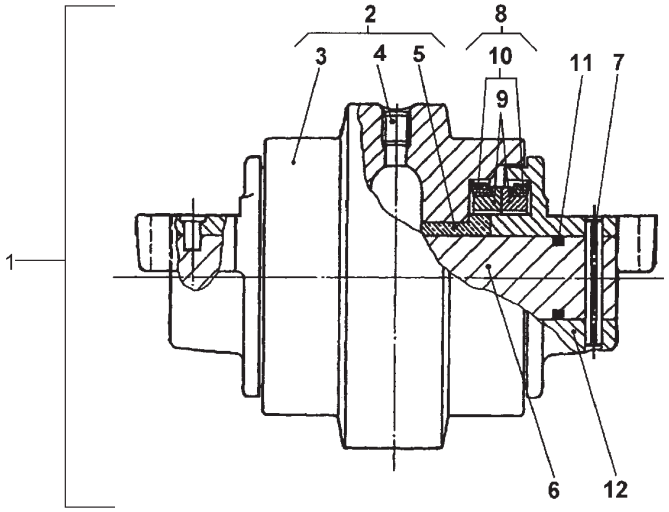

Ref. No.	Part No.	Description	Qty. Req.	Ref. No.	Part No.	Description	Qty. Req.
01	164114	ROLLER COMPLETE	1	07	164171	COTTER PIN	2
02	164166	ROLLER (INCL. BUSHING, #5)	1	08	164172	SEAL	2
03	164167	ROLLER	1	09	164173	WASHER	2
04	164168	LOCK SCREW	1	10	164174	O–RING	2
05	164169	BUSHING	2	11	164175	O–RING	2
06	164170	AXLE	1	12	164176	BRACKET	2

GE1202 - TRACK TENSIONER, RUBBER TRACK

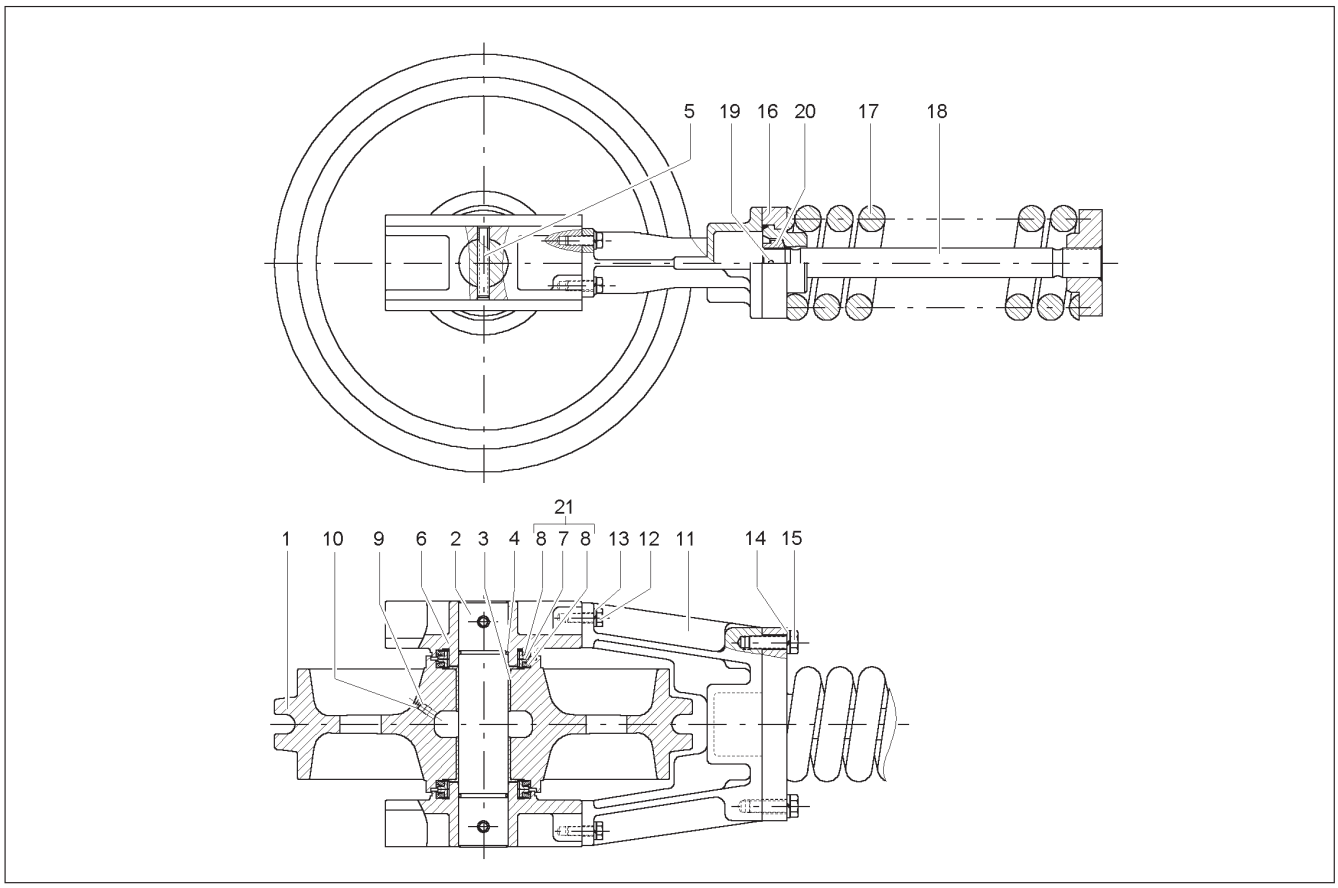

Ref. No.	Part No.	Description	Qty. Req.
01	164165	TENSION WHEEL	1
02	164161	SHAFT	1
03	164160	BUSHING	2
04	164159	SEAL	2
05	164158	COTTER PIN	2
06	164157	BRACKET	2
07	164156	SEAL	4
08	164155	O–RING	4
09	164154	PLUG	1
10	164153	SEAL	1
11	164152	FORK	1
12	164151	SCREW	4
13	162751	PLUG	4
14	164150	WASHER	2
15	164149	SCREW	2
16	164148	PLATE	1
17	164147	SPRING	1
18	164164	BRACKET	1
19	164145	COTTER PIN	1
20	164163	NUT	1
21	164144	SEAL KIT	1

GE1202 – DOZER BLADE

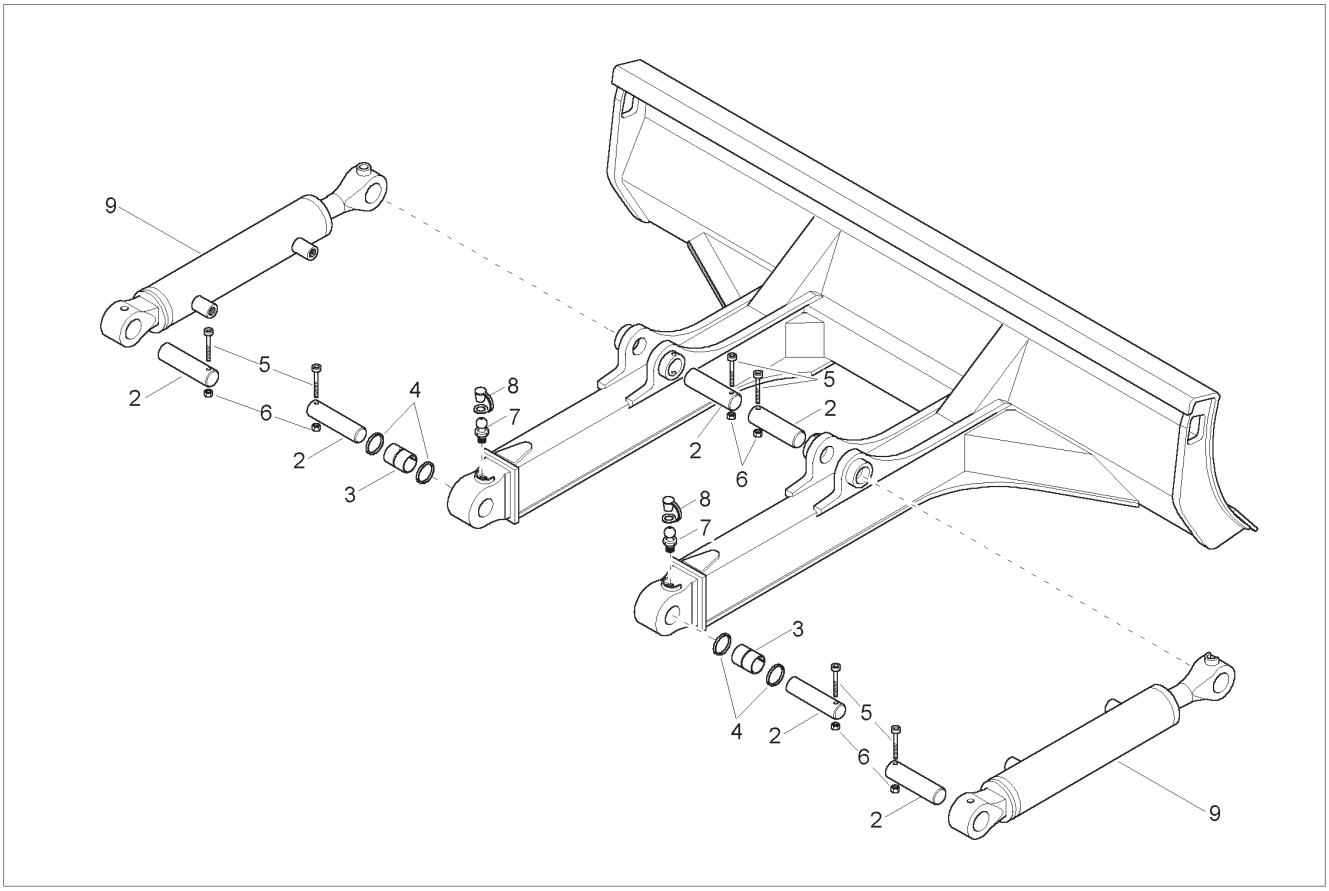

Ref. No.	Part No.	Description	Qty. Req.
01	164235	DOZER BLADE	1
02	164619	PIN DM=70X205	6
03	164960	BUSHING 85/70X68	2
04	164967	PIN SEAL	4
05	163205	SCREW	6
06	651449	HLN INS M12–1.7	6
07	161411	LUBRICATION NIPPLE	2
08	161416	PROTECTION CAP	2
09	164464	DOZER BLADE CYLINDER COMPLETE	2

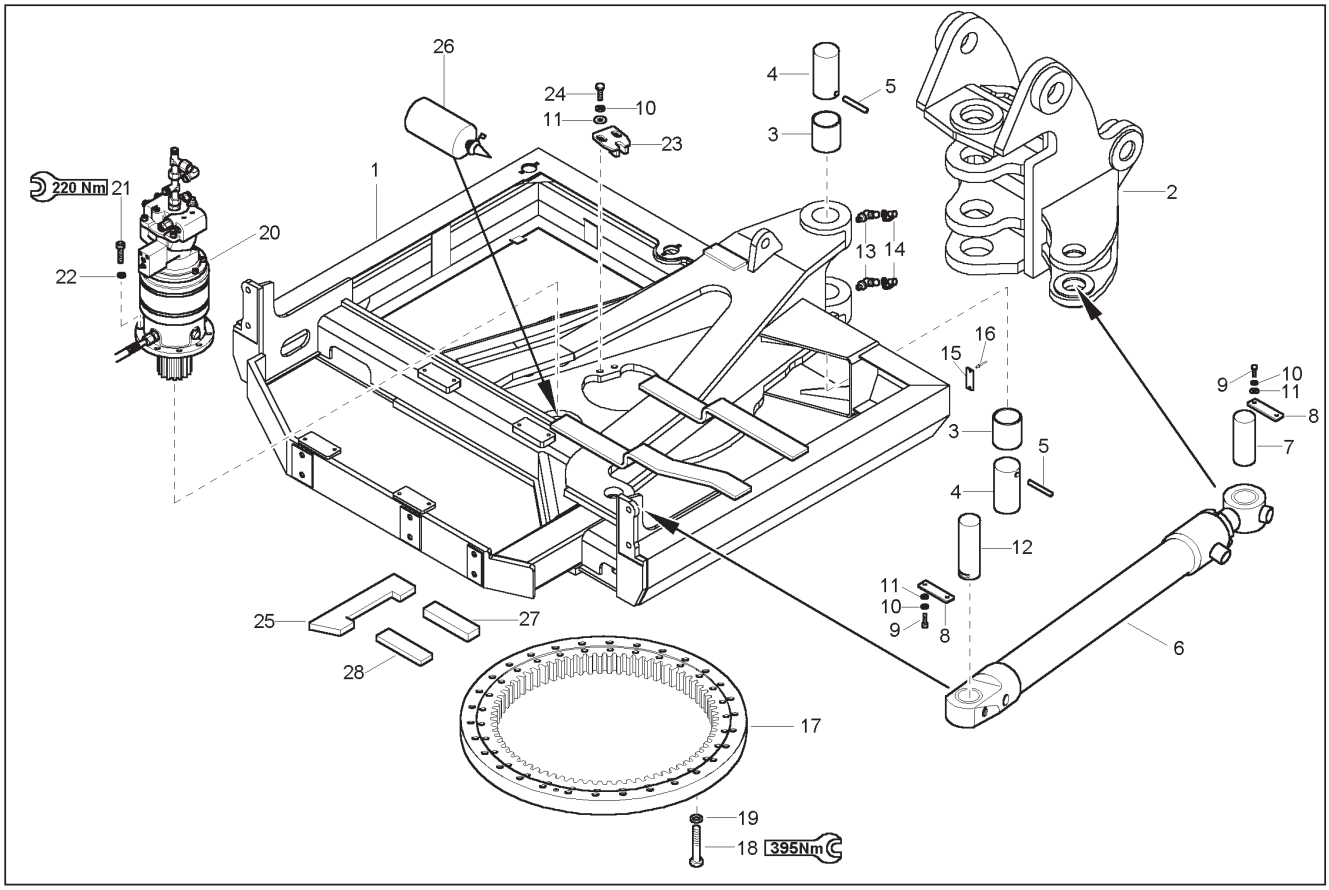

Ref. No.	Part No.	Description	Qty. Req.	Ref. No.	Part No.	Description	Qty. Req.
01	164212	CHASSIS	1	15	160409	REFLECTOR	2
02	164458	SWING BRACKET	1	16	161627	RIVET/BLIND A4 X 12 DIN7337	4
03	164961	BUSHING 120/105x114	2	17	164241	TURNTABLE	1
04	164629	PIN DM=105X220	2	18	164909	SCREW	36
05	163349	WASHER	2	19	164919	WASHER	36
06	161142	BOOM OFFSET CYLINDER	1	20	164499	ROTARY ACTUATOR COMPLETE	1
07	164631	PIN DM=75X215	1	21	164912	SCREW	9
08	163074	PIN COVER	2	22	164920	WASHER	9
09	651405	CS M12–1.7 X 30 C 10.9	2	23	164197	BRACKET	1
10	161670	RING/SNAP S12	6	24	651483	SHCS HS M12–1.7 X 35 10.9	2
11	161642	WASHER/GR A 13 ZO	6	25	164644	ISOLATION MAT	1
12	161206	PIN	1	26	164865	GLUE	1
13	161420	LUBRICATION NIPPLE	2	27	164647	ISOLATION MAT	1
14	161422	PROTECTION CAP	2	28	164646	ISOLATION MAT	4

GE1202 – CHASSIS COVERS

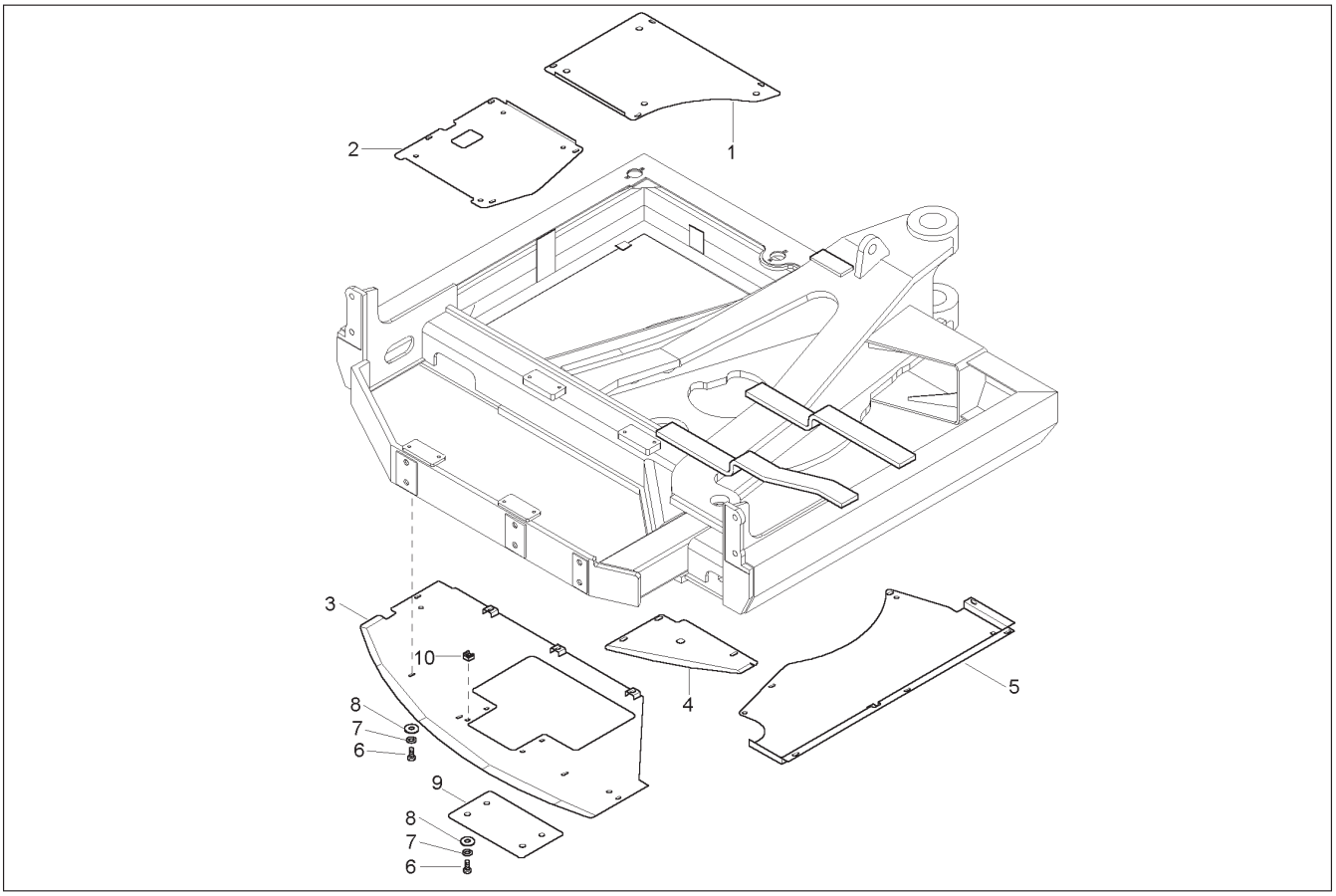

Ref. No.	Part No.	Description	Qty. Req.	Ref. No.	Part No.	Description	Qty. Req.
01	164213	COVER	1	06	656001	CS M8–1.2 X 20 C 8.8	29
02	164214	COVER	1	07	161676	RING/SNAP S8	29
03	164217	COVER	1	08	161667	WASHER/GR A 8.4	29
04	164215	COVER	1	09	164222	COVER	1
05	164216	COVER	1	10	161616	NUT/CAGE M8	4

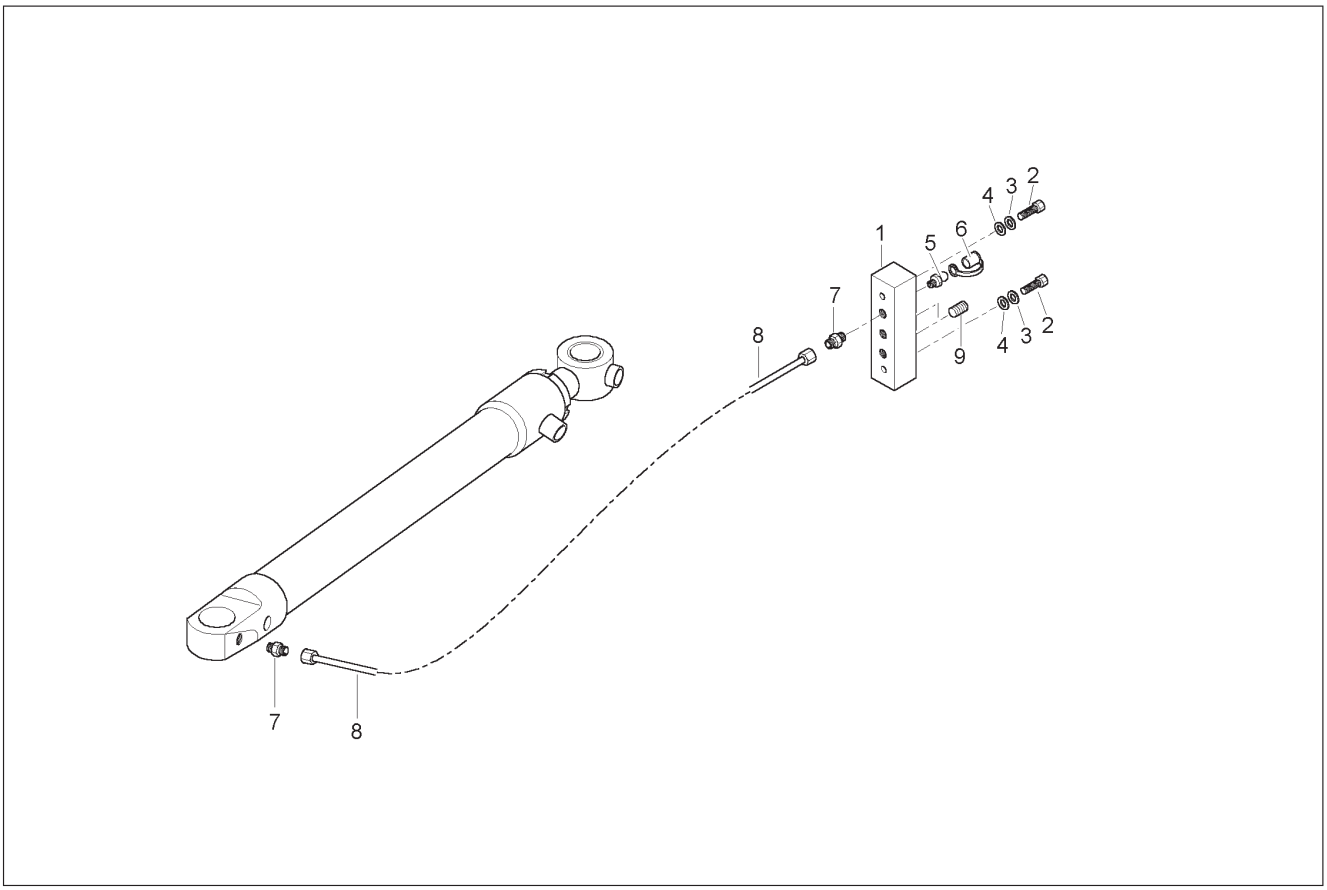

Ref. No.	Part No.	Description	Qty. Req.	Ref. No.	Part No.	Description	Qty. Req.
01	161722	LUBRICATION NIPPLE BLOCK	1	06	161422	PROTECTION CAP	1
02	651509	SHCS HS M6–1 X 30 8.8	2	07	161482	SCREW JOINT	2
03	161675	RING/SNAP S6	2	08	164789	HP HOSE	1
04	163348	SCREW	2	09	164896	GRUB SCREW	2
05	161411	LUBRICATION NIPPLE	1				

GE1202 – REAR WALL

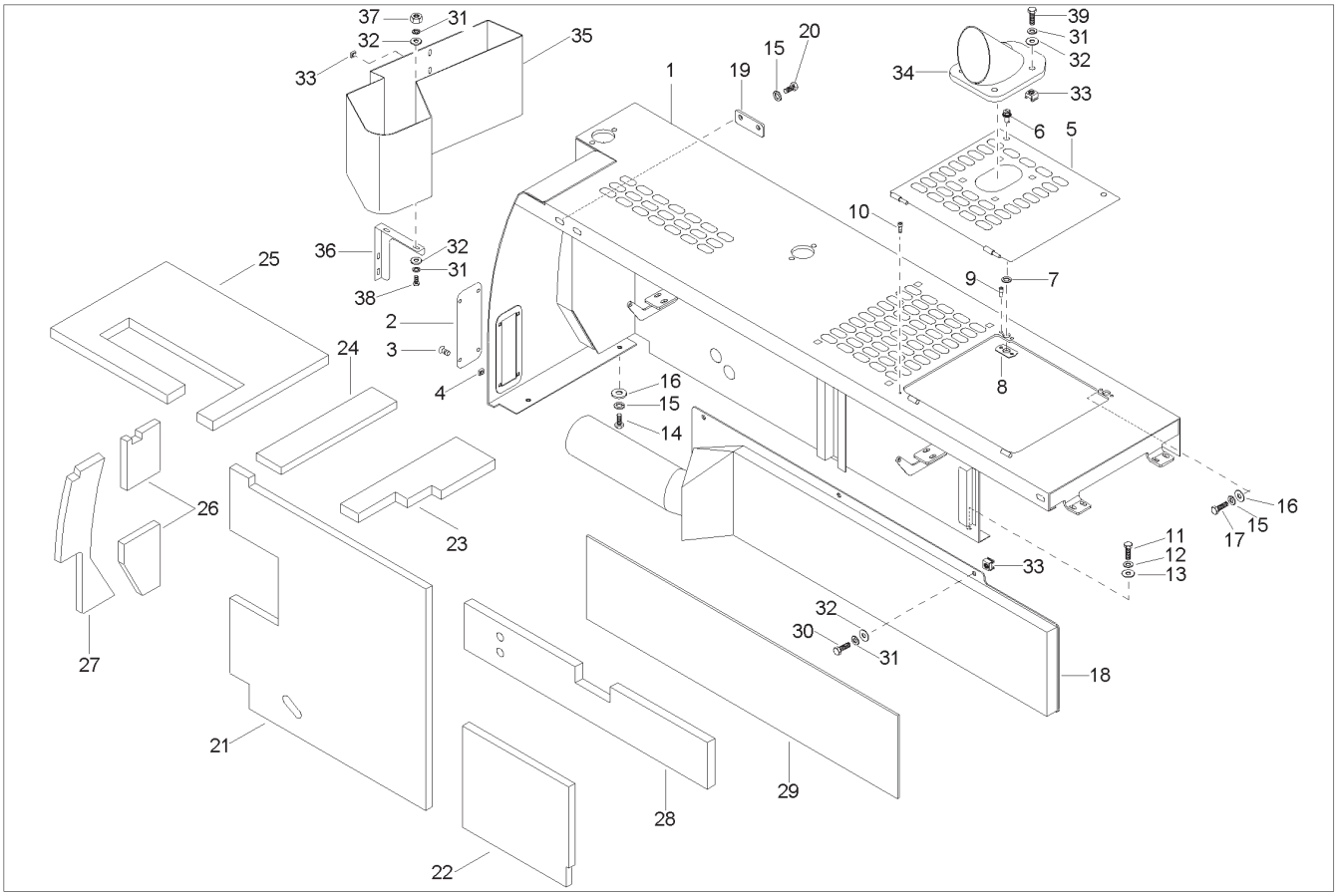

Ref. No.	Part No.	Description	Qty. Req.
01	164198	REAR WALL	1
02	162791	PLATE	1
03	651460	SCREW FCHC HS M5–0.8 X 16 8.8	4
04	161611	NUT/CAGE M5	4
05	164199	BRACKET	2
06	161677	QUICKLOCK/HEXAGON	3
07	161619	WASHER/QUICK LOCK	3
08	161691	QUICKLOCK/LOWER	3
09	161626	RIVET/BLIND A3 X 12 DIN7337	3
10	651502	SHCS HS M5–0.8 X 10 8.8	2
11	651393	CS M10–1.5 X 25 C 8.8	6
12	161669	RING/SNAP S10	6
13	161641	WASHER/GRA 10.5	6
14	651405	CS M12–1.7 X 30 C 10.9	2
15	161670	RING/SNAP S12	8
16	161642	WASHER/GR A 13	4
17	651404	CS M12–1.7 X 20 C 8.8	1
18	164209	AIR DUCT	1
19	163157	COVER	2
20	651411	HB M12–1.7X 60 C 10.9	4
21	164633	ISOLATION MAT	1
22	164640	ISOLATION MAT	1
23	164639	ISOLATION MAT	1
24	164638	ISOLATION MAT	1
25	164636	ISOLATION MAT	1
26	164635	ISOLATION MAT	1
27	164634	ISOLATION MAT	1
28	164641	ISOLATION MAT	1
29	164642	ISOLATION MAT	1
30	656093	CS M8–1.2 X 16 C 8.8	6
31	161676	RING/SNAP S8	22
32	161667	WASHER/GR A 8.4	18
33	161616	NUT/CAGE M8	12
34	164299	COVER	1
35	164229	TOOL BOX	1
36	164230	BRACKET	1
37	164916	NUT	2
38	656001	CS M8–1.2 X 20 C 8.8	6
39	656105	CS M8–1.2 X 25 C 8.8	4

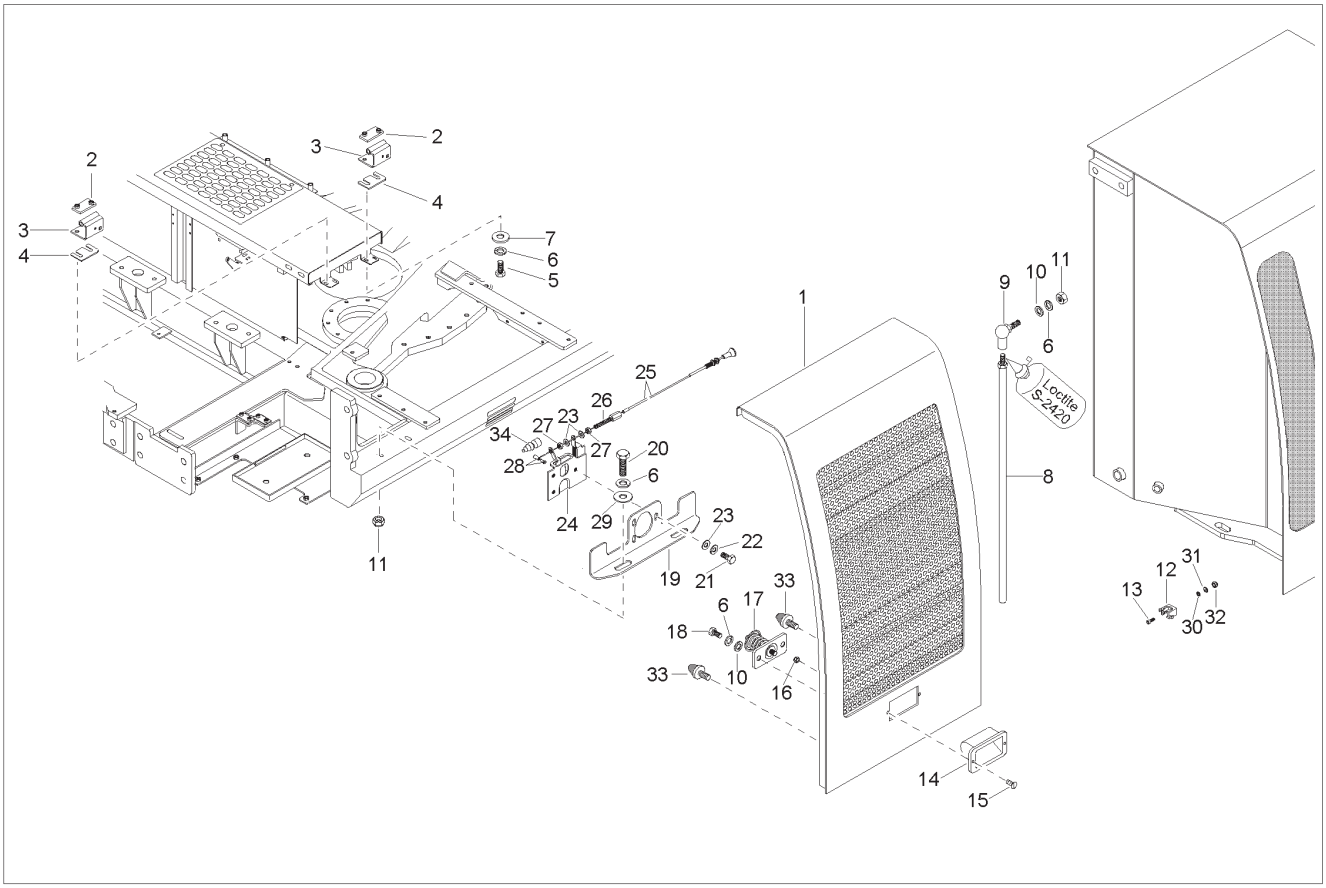

Ref. No.	Part No.	Description	Qty. Req.
01	164206	SIDEFLAP	1
02	162716	BRACKET	2
03	160882	HINGE	2
04	162675	BRACKET	2
05	656094	CS M8–1.2 X 30 C 8.8	4
06	161676	RING/SNAP S8	9
07	161661	WASHER/GR A 8.4 ZO	4
08	162203	COUNTERWEIGHT	1
09	162072	COLLAR	1
10	161661	WASHER/GR A 8.4 ZO	3
11	161616	NUT/CAGE M8	3
12	162389	RUBBER PROFILE	1
13	651422	CS M5–0.8 X 20 C 8.8	1
14	161064	HANDLE	1
15	651459	SCREW FCHC HS M14–2.0 X 16 8.8	2
16	656116	HN M4–.7	2
17	161061	BRACKET	1
18	656093	CS M8–1.2 X 16 C 8.8	2
19	161058	BRACKET	1
20	656001	CS M8–1.2 X 20 C 8.8	2
21	656149	CS M6–1.0 X 16 C 8.8	3
22	161675	RING/SNAP S6	3
23	161660	WASHER/GR A 6.4	5
24	161062	BRACKET	1
25	164713	CABLE	1
26	162604	UPPER WINDSCREEN FRAME	1
27	651457	HLN INS M6–1.0 8	2
28	161929	HAND LEVER	1
29	161667	WASHER/GR A 8.4	2
30	161674	RING/SNAP S5	1
31	161659	WASHER/GR A 5.3	1
32	656100	HN M5–.8	1
33	161358	RUBBER	2
34	164698	BELLOWS	1
35	164667	ANGLE	1

GE1202 – COUNTERWEIGHT

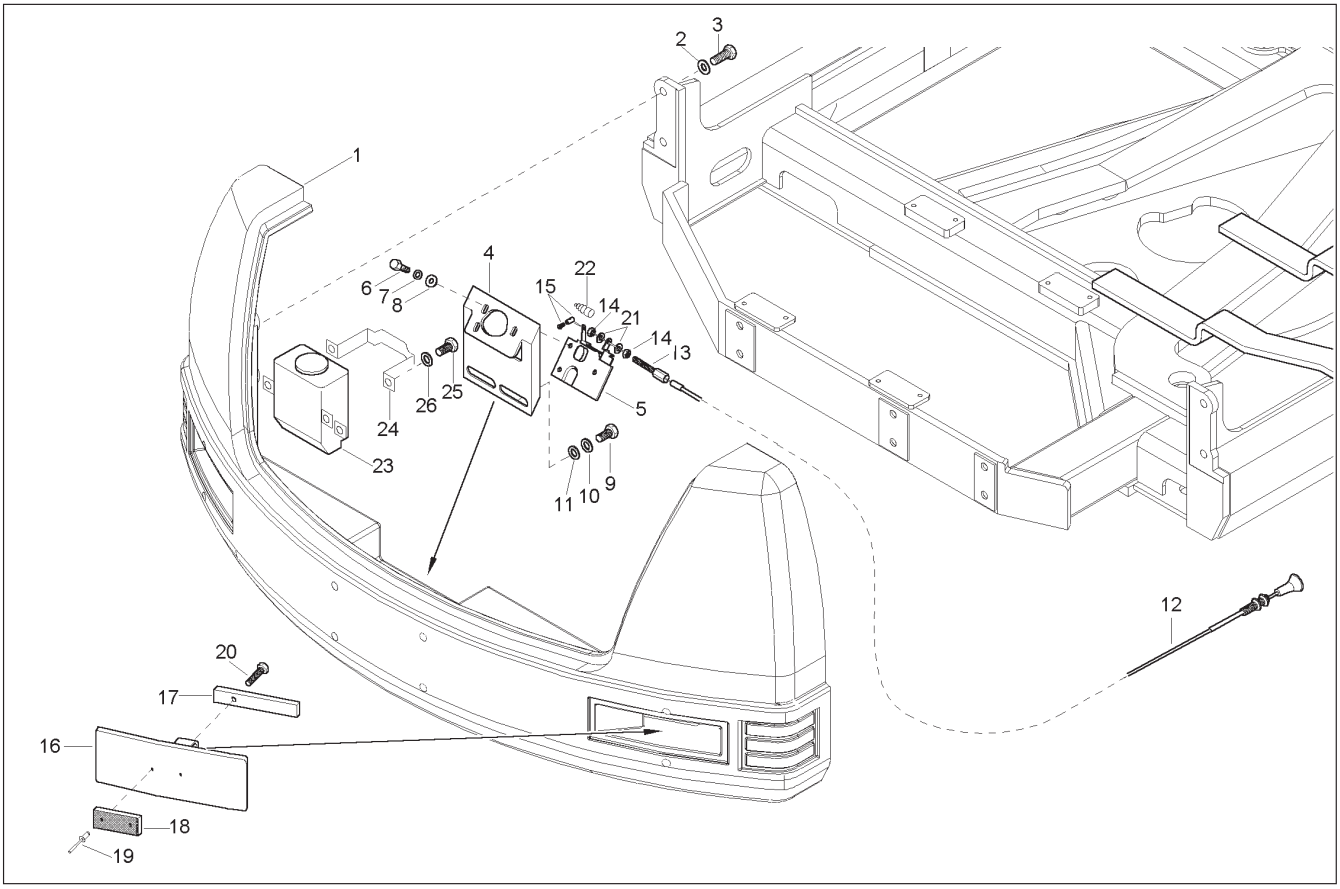

Ref. No.	Part No.	Description	Qty. Req.
1	164221	COUNTERWEIGHT	1
2	161653	WASHER/ROUND	12
3	651420	CS M20–2.5 X 70 C 8.8	12
4	161057	BRACKET	1
5	161062	BRACKET	1
6	656149	CS M6–1.0 X 16 C 8.8	3
7	161675	RING/SNAP S6	3
8	161621	LW SPRING 6	3
9	656122	CS M12–1.7 X 25 C 8.8	2
10	161670	RING/SNAP S12	2
11	161642	WASHER/GR A 13	2
12	164713	CABLE	1
13	162604	UPPER WINDSCREEN FRAME	1
14	656047	HN M6–1.0	2

Ref. No.	Part No.	Description	Qty. Req.
15	161929	HAND LEVER	1
16	164207	COVER	2
17	162794	FRAME	2
18	160644	REFLECTOR	2
19	161627	RIVET/BLIND A4 X 12	4
20	651433	HB M8–1.2 X 40 C 8.8	2
21	161660	WASHER/GR A 6.4	2
22	164698	BELLOWS	1
23	164690	WINDSCREEN WASHING	1
24	164668	CLAMP	1
25	651505	SHCS HS M5–0.8 X 20 8.8	2
26	161659	WASHER/GR A 5.3	2
27	164667	ANGLE	1

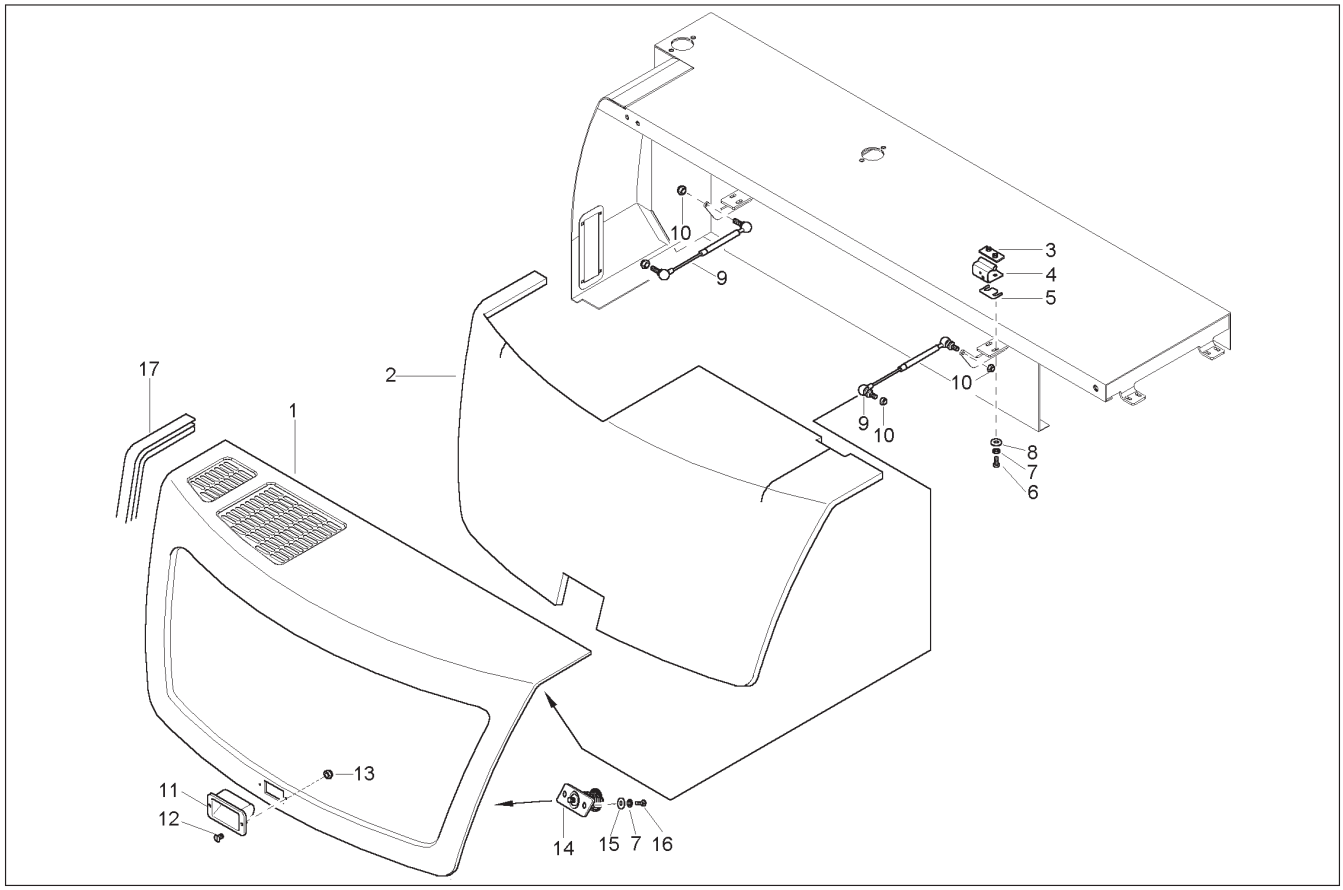

Ref. No.	Part No.	Description	Qty. Req.
01	164219	BONNET	1
02	164637	ISOLATION MAT	1
03	162716	BRACKET	2
04	160882	HINGE	2
05	162675	BRACKET	1
06	656094	CS M8–1.2 X 30 C 8.8	4
07	161676	RING/SNAP S8	6
08	161661	WASHER/GR A 8.4	4
09	161204	PNEUMATIC SPRING	2
10	656100	HN M5–.8	4
11	161064	HANDLE	1
12	651459	SCREW FCHC HS M14–2.0 X 16 8.8	2
13	656116	HN M4–.7	2
14	161061	BRACKET	1
15	161661	WASHER/GR A 8.4	2
16	656093	CS M8–1.2 X 16 C 8.8	2
17	162016	RUBBER SEAL	3

GE1202 – VALVE BODY COVER

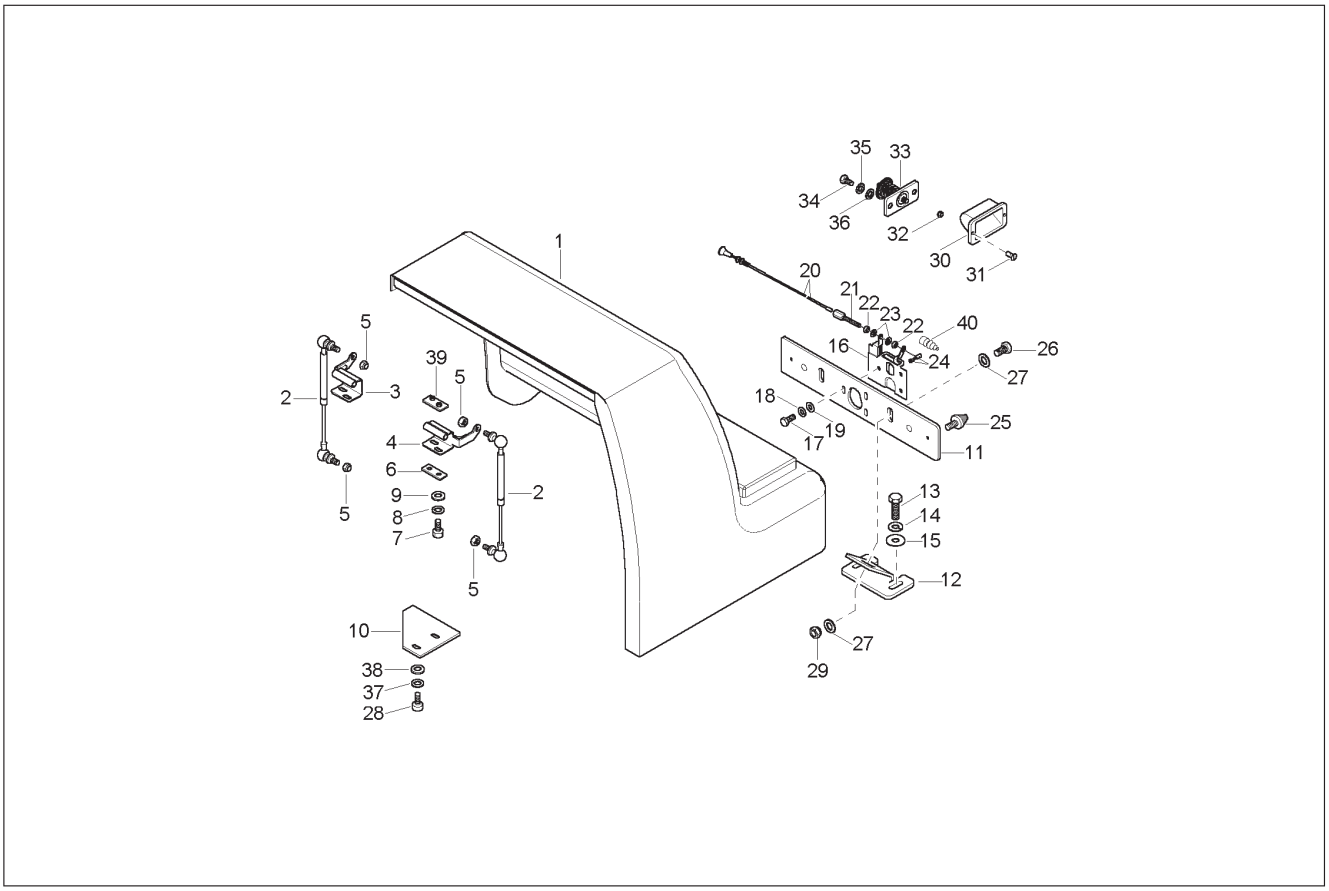

Ref. No.	Part No.	Description	Qty. Req.
1	164218	VALVE COVER	1
2	161204	PNEUMATIC SPRING	2
3	164730	HINGE	1
4	164729	HINGE	1
5	656100	HN M5–.8	4
6	164208	BRACKET	2
7	656094	CS M8–1.2 X 30 C 8.8	4
8	161676	RING/SNAP S8	4
9	161667	WASHER/GR A 8.4	4
10	164225	BRACKET	1
11	164224	BRACKET	1
12	164223	BRACKET	2
13	651391	CS M10–1.5 X 20 C 8.8	4
14	161669	RING/SNAP S10	4
15	161641	WASHER/GRA 10.5	4
16	161062	BRACKET	1
17	656149	CS M6–1.0 X 16 C 8.8	3
18	161675	RING/SNAP S6	3
19	161660	WASHER/GR A 6.4	3
20	164713	CABLE	1
21	162604	UPPER WINDSCREEN FRAME	1
22	651457	HLN INS M6–1.0 8	2
23	161660	WASHER/GR A 6.4	2
24	161929	HAND LEVER	1
25	161358	RUBBER	2
26	651396	CS M10–1.5 X 30 C 8.8	2
27	161663	WASHER/GR A 10.5	4
28	162860	SCREW	2
29	651448	HLN INS M10–1.5	2
30	161064	HANDLE	1
31	651459	SCREW FCHC HS M14–2.0 X 16 8.8	2
32	163345	SCREW	2
33	161061	BRACKET	1
34	656093	CS M8–1.2 X 16 C 8.8	2
35	161676	RING/SNAP S8	2
36	161661	WASHER/GR A 8.4	2
37	161675	RING/SNAP S6	2
38	161666	WASHER/GR A 6.4	2
39	162716	BRACKET	2
40	164698	BELLOWS	1
41	164667	ANGLE	1

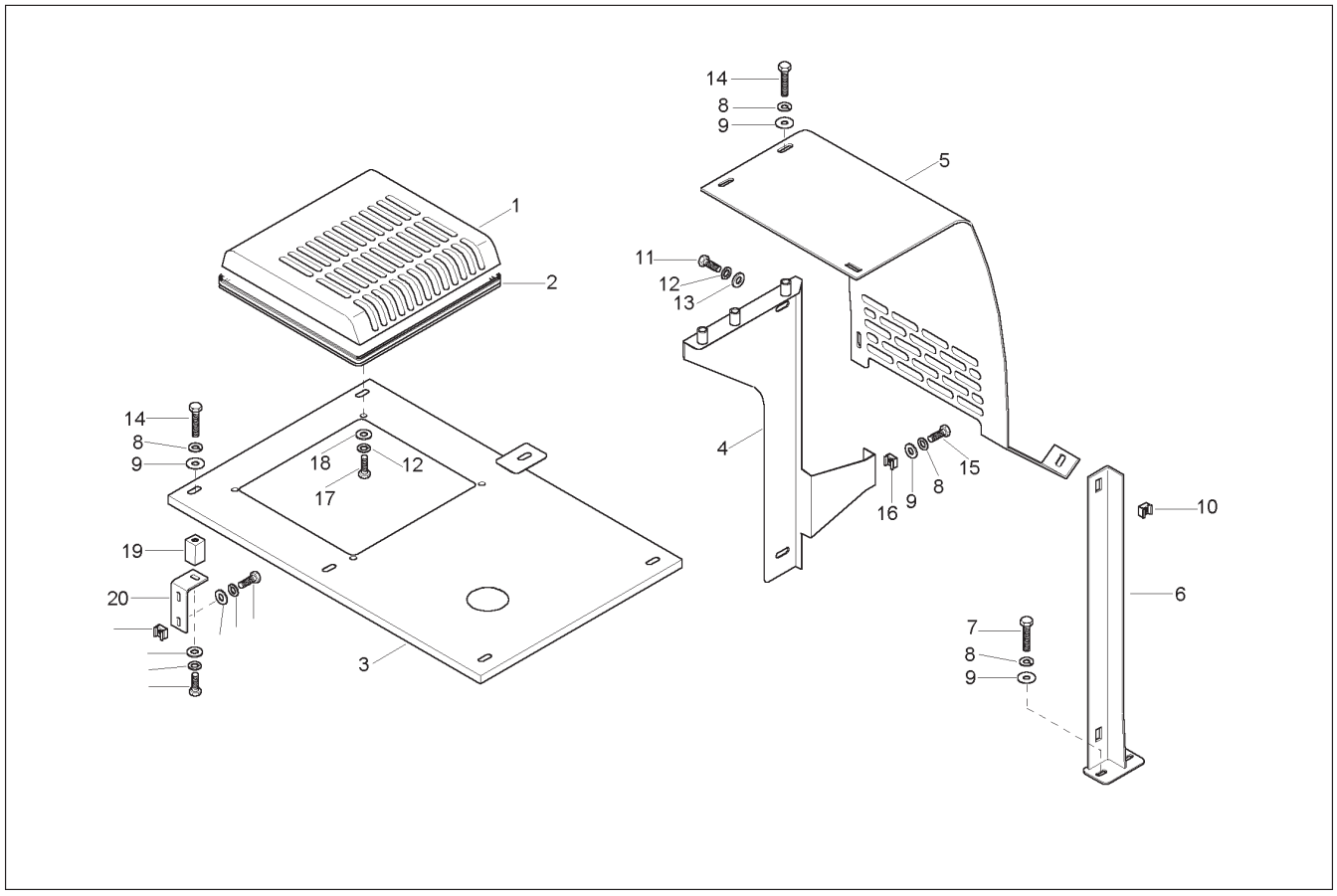

Ref. No.	Part No.	Description	Qty. Req.	Ref. No.	Part No.	Description	Qty. Req.
01	163164	HOSE COVER	1	11	656001	CS M8–1.2 X 20 C 8.8	4
02	162388	SEAL	1	12	161676	RING/SNAP S8	8
03	164204	TANK COVER	1	13	161667	WASHER/GR A 8.4	4
04	164203	COVER	1	14	651402	CS M10–1.5 X 50 C 8.8	8
05	164205	COVER	1	15	651393	CS M10–1.5 X 25 C 8.8	2
06	164202	VALVE BRACKET	1	16	161610	NUT/CAGE M10	1
07	651396	CS M10–1.5 X 30 C 8.8	2	17	651432	CS M8–1.2 X 35 C 8.8	4
08	161669	RING/SNAP S10	12	18	161640	WASHER/GR A 10.5	4
09	161663	WASHER/GR A 10.5	12	19	164211	THREADED PIECE	1
10	161616	NUT/CAGE M8	4	20	164210	BRACKET	1

GE1202 – BOOM ARM

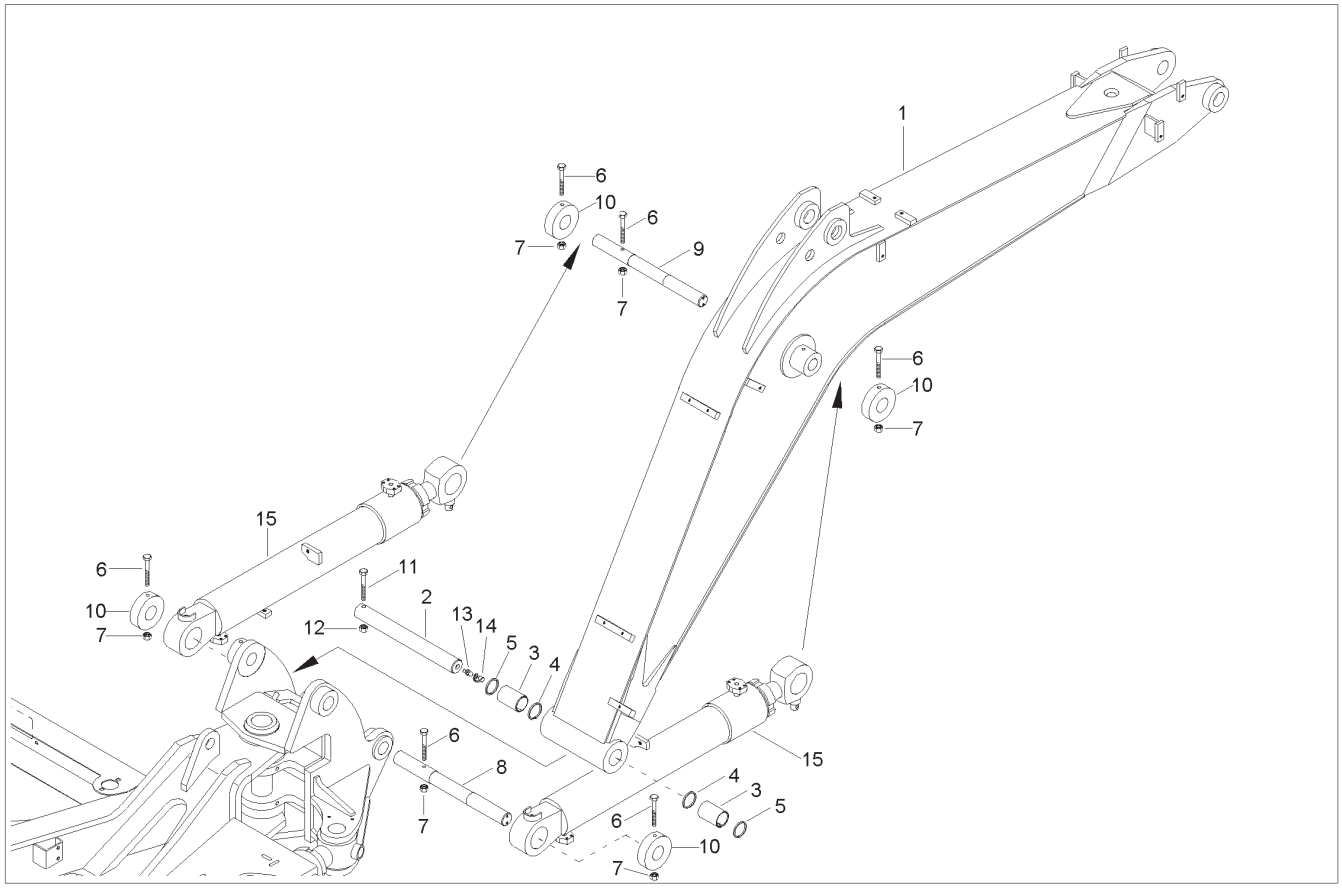

Ref. No.	Part No.	Description	Qty. Req.
01	164457	BOOM	1
02	164627	PIN DM=75X486	1
03	164956	BUSHING 90/75X120	2
04	164922	WASHER	2
05	161583	SEAL	2
06	164901	SCREW	6
07	164917	NUT	6
08	164628	PIN DM=70X687	1
09	164625	PIN DM=70X687	1
10	164626	BRACKET	4
11	164902	SCREW	1
12	651451	HLN INS M16–2.0	1
13	161412	LUBRICATION NIPPLE	1
14	162928	WASHER	1
15	164463	BOOM CYLINDER COMPLETE	2

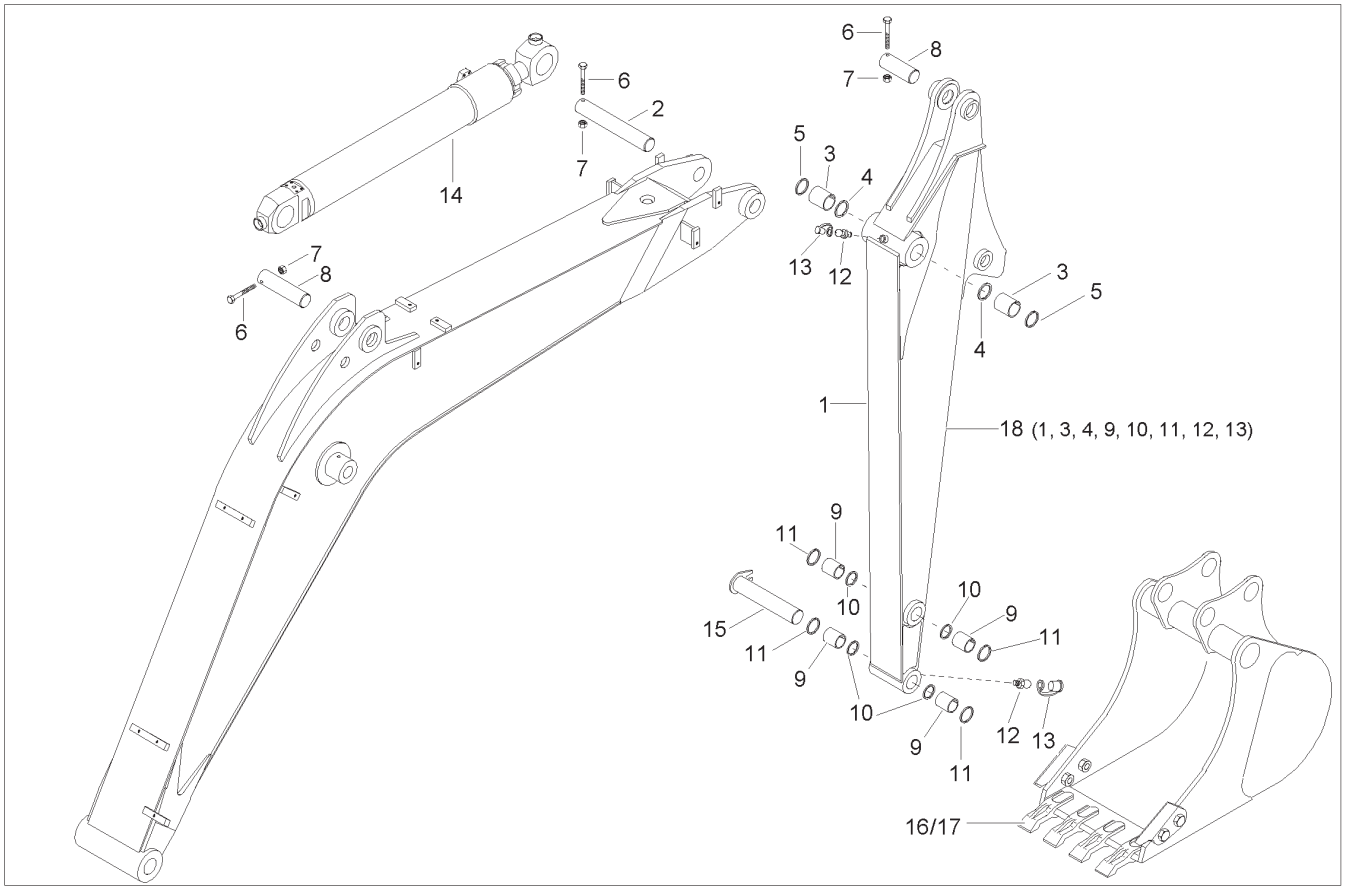

Ref. No.	Part No.	Description	Qty. Req.	Ref. No.	Part No.	Description	Qty. Req.
01	164453	DIPPER ARM	1	10	164923	WASHER	4
02	164621	PIN DM=75X415	1	11	161589	PIN SEAL	4
03	164957	BUSHING 90/75X90	2	12	161412	LUBRICATION NIPPLE	2
04	164922	WASHER	2	13	162928	WASHER	2
05	164968	PIN SEAL	2	14	164462	DIPPER ARM CYLINDER COMPLETE	1
06	164901	SCREW	3	15	164632	PIN DM=60X365	1
07	164917	NUT	3	16	164451	DIGGING TOOTH	4
08	164620	PIN DM=70X250	2	17	164452	SAFETY BOLT	4
09	164958	BUSHING 75/60X80	4	18	164460	PRE–ASSEMBLED DIPPER ARM	1

GE1202 – CONNECTING LINK

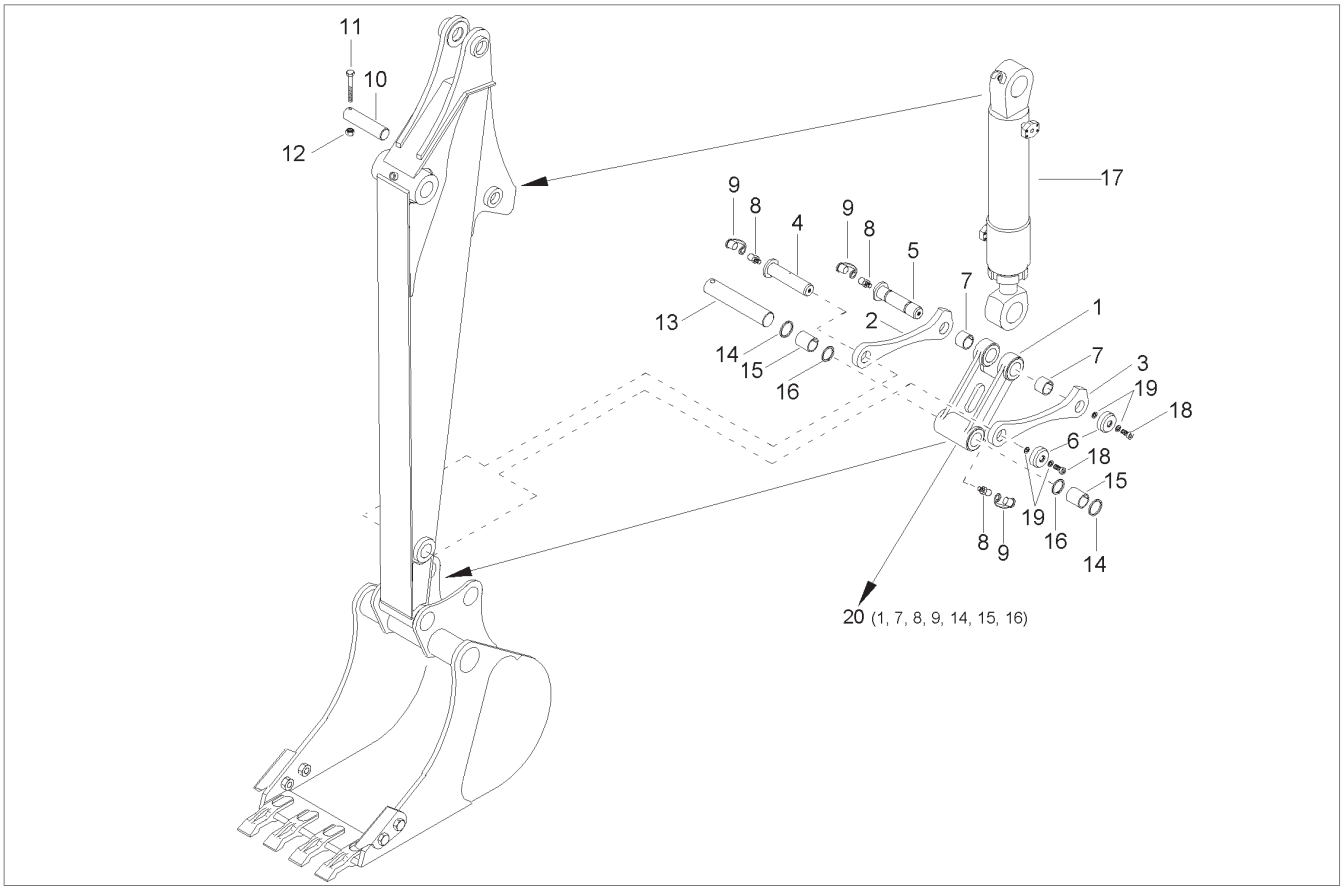

Ref. No.	Part No.	Description	Qty. Req.
01	164454	CONNECTING LINK	1
02	164456	CONNECTING LINK LEFT	1
03	164455	CONNECTING LINK RIGHT	1
04	164623	PIN DM=60X320	1
05	164624	PIN DM=65X320	1
06	164630	PIN COVER	2
07	164959	BUSHING 80/65X55	2
08	161411	LUBRICATION NIPPLE	3
09	161416	PROTECTION CAP	3
10	164622	PIN DM=65X240	1
11	164901	SCREW	1
12	164917	NUT	1
13	164632	PIN DM=60X365	1
14	161589	PIN SEAL	2
15	164958	BUSHING 75/60X80	2
16	164923	WASHER	2
17	164461	BUCKET CYLINDER COMPLETE	1
18	651494	SHCS HS M16–1.5 X 30 12.9	2
19	161672	RING/SNAP S16	4
20	164459	PRE–ASSEMBLED CONNECTING LINK	1

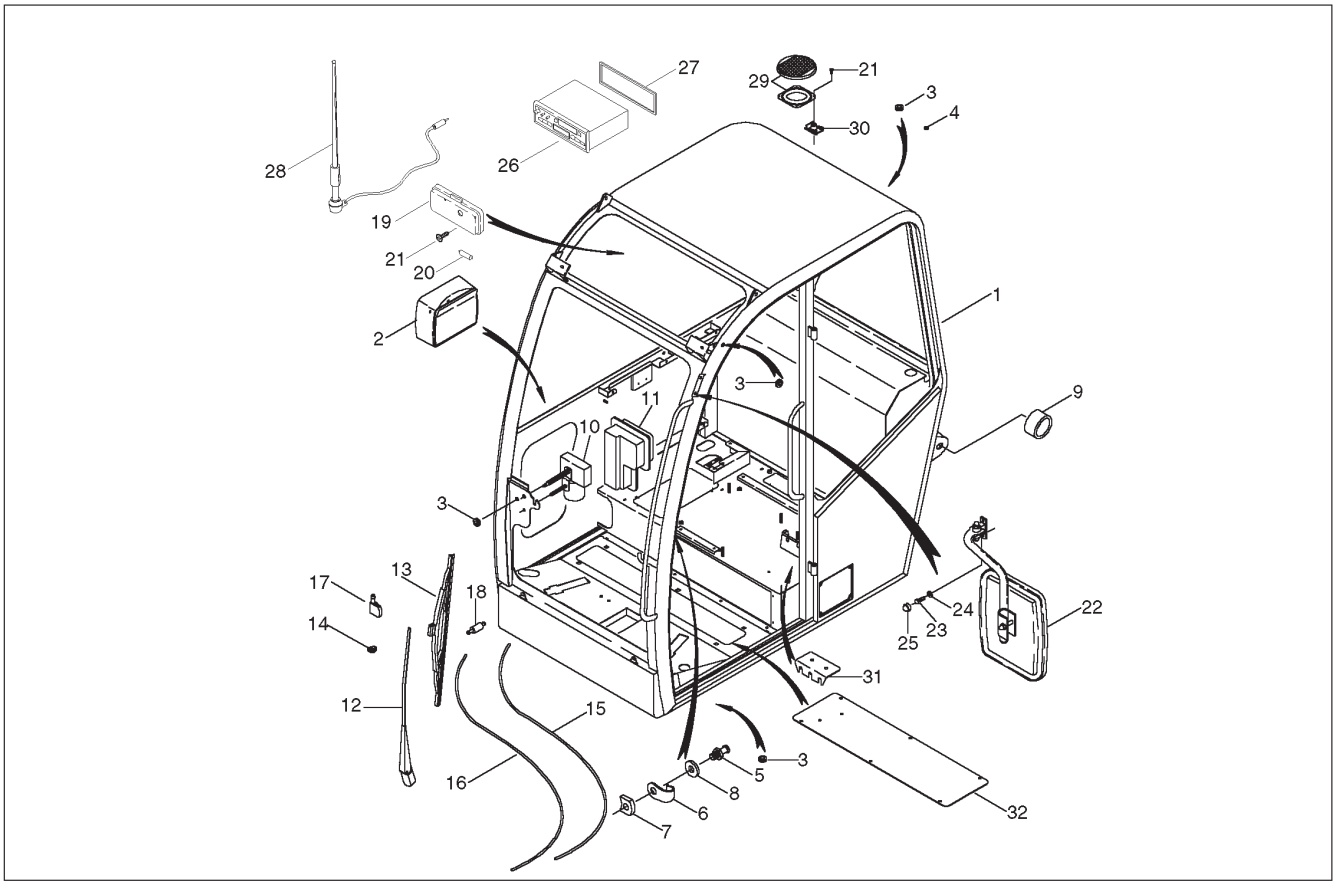

Ref. No.	Part No.	Description	Qty. Req.	Ref. No.	Part No.	Description	Qty. Req.
01	164260	CABIN FRAME	1	17	161087	NOZZLE	1
02	164676	ASHTRAY	1	18	164673	NON RETURN VALVE	1
03	162797	WATER HOSE	10	19	160488	ILLUMINATION	1
04	164677	PLUG	2	20	164182	LAMP	1
05	161921	SWIVEL JOINT	1	21	162798	PLUG	10
06	164771	BRACKET	1	22	162607	MIRROR	1
07	164678	PLATE	1	23	656149	CS M6–1.0 X 16 C 8.8	2
08	161923	BRACKET	1	24	162924	NUT	4
09	164674	DOOR LOCK	1	25	162737	COVER	2
10	161085	WIPER ENGINE	1	26	162006	RADIO	1
11	164738	COVER FOR WIPER ENGINE	1	27	164187	FRAME	1
12	161084	BRUSH HOLDER	1	28	162839	FUSE	1
13	162795	WIPER BLADE	1	29	164259	SPEAKERS 40W	2
14	161086	CLIPS	1	30	164683	NUT	8
15	162796	WATER HOSE	1	31	164739	COVER	1
16	164181	WATER HOSE	1	32	164740	COVER	1

GE1202 – CABIN FRAME 2

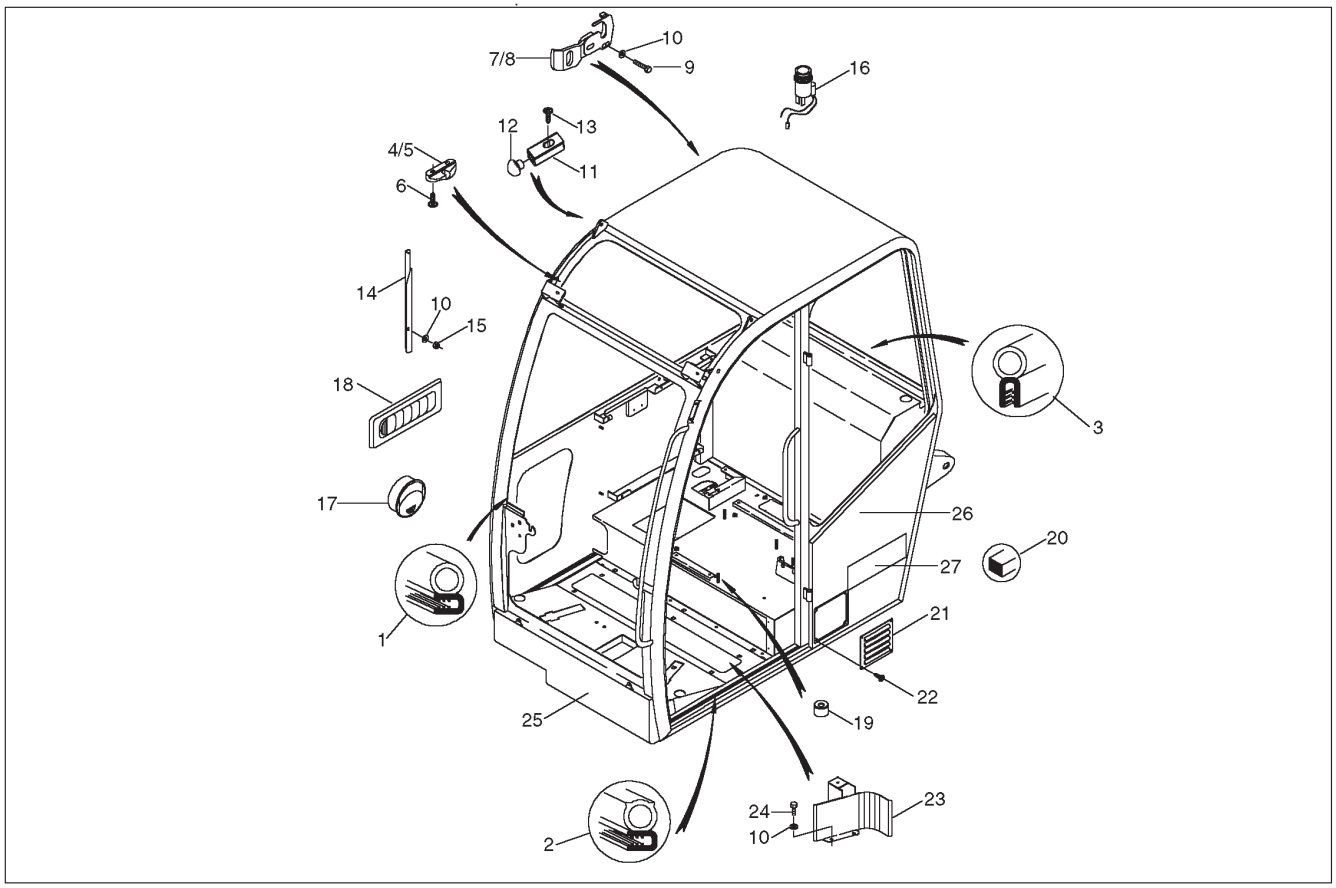

Ref. No.	Part No.	Description	Qty. Req.
01	164675	PROFILE	2.4
02	162018	RUBBER PROFILE	4.6
03	161949	RUBBER PROFILE	1.7
04	160526	LOCK	1
05	160527	LOCK	1
06	162029	SCREW	4
07	164679	BRACKET	1
08	164680	BRACKET	1
09	651425	CS M6–1.0 X 30 C 8.8	4
10	162924	NUT	8
11	164681	RESILIENT PAD	2
12	164686	RUBBER PLUG	2
13	164907	SCREW	2
14	164741	FIXING	1
15	651457	HLN INS M6–1.0 8	2
16	164696	IGNITER	1
17	164670	AIR NOZZLE	2
18	160530	AIR NOZZLE	1
19	164742	WASHER	4
20	164188	PLATE 10X15	0.4
21	164743	BRACKET	1
22	162035	SCREW	10
23	164774	COVER PLATE	1
24	656092	CS M6–1.0 X 12 C 8.8	2
25	163338	STICKER	1
26	164862	STICKER	1
27	164855	STICKER	1

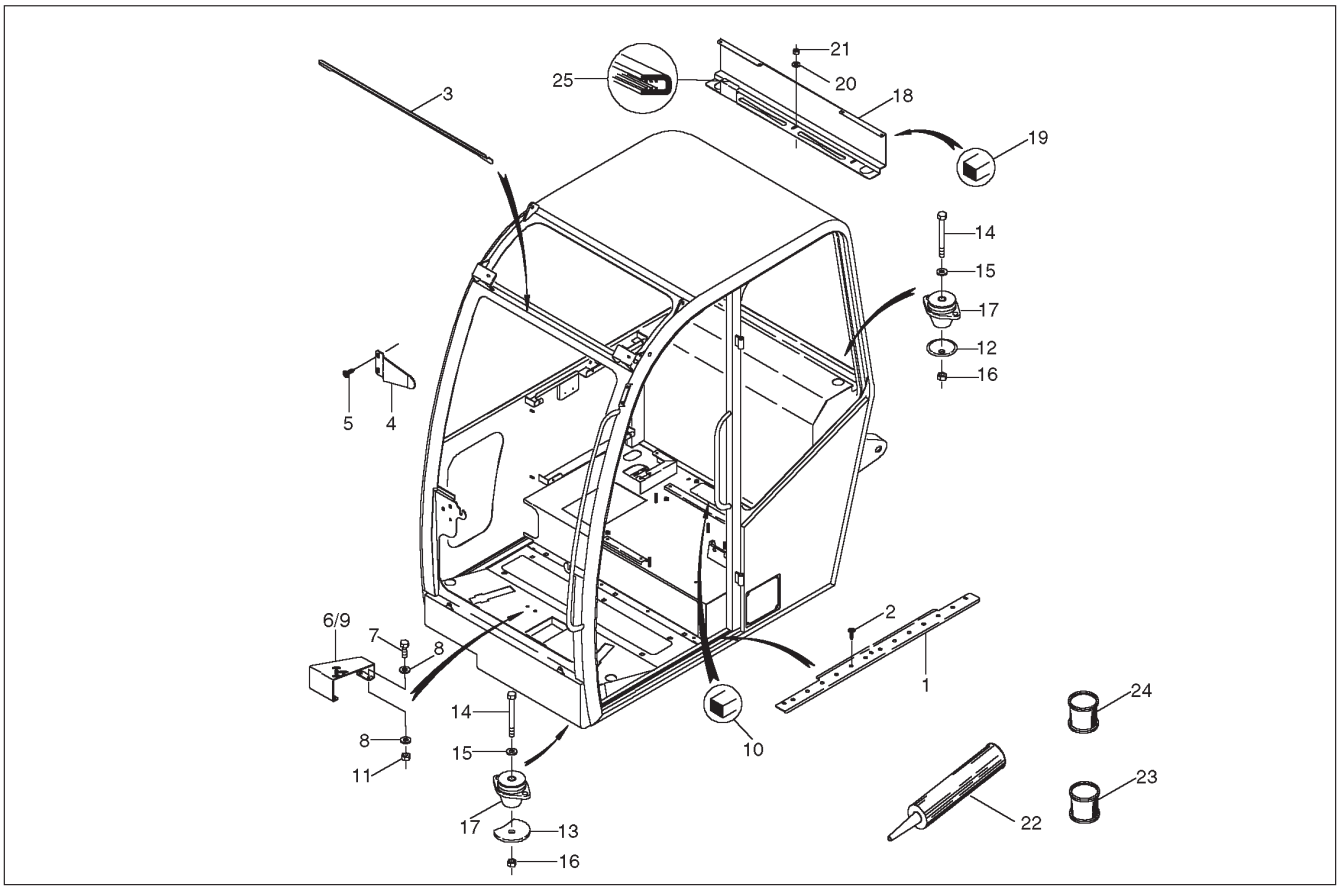

Ref. No.	Part No.	Description	Qty. Req.
01	164775	SHIELD	1
02	161629	SCREW/PAN HEAD TAP	3
03	161844	GUTTER	1
04	162807	GUTTER	1
05	162036	SCREW	2
06	164261	BRACKET LEFT	1
07	656093	CS M8–1.2 X 16 C 8.8	8
08	161668	WASHER/GR A 8.4 ZO DIN134	16
09	164262	BRACKET RIGHT	1
10	164746	SEAL	1
11	651458	HLN INS M8–1.2 8	8
12	164184	SUPPORT	2
13	164185	SUPPORT	2
14	651403	HB M12–1.7 X 100 C 8.8	4
15	161644	WASHER/GR A13 DIN134 ZO	4
16	651449	HLN INS M12–1.7	4
17	164682	CUSHION	4
18	164776	BRACKET	1
19	164188	PLATE 10X15	0.8
20	162924	NUT	3
21	651457	HLN INS M6–1.0 8	3
22	164893	SILICON GLUE	1
23	164744	AKTIVATOR	1
24	164745	REMOVER 208	1
25	164691	EDGE PROTECTION	0.1

GE1202 – MAIN HARNESS

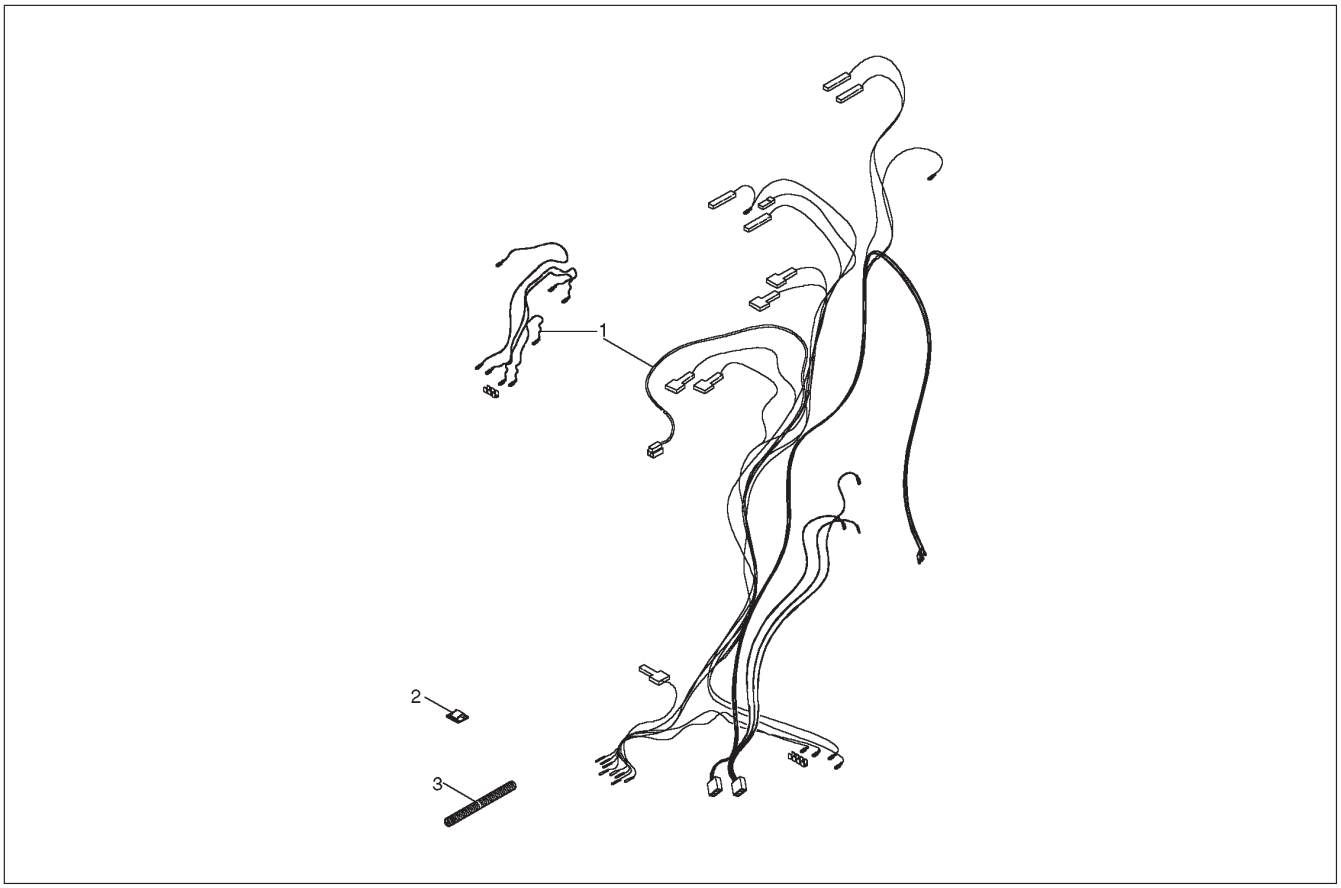

Ref. No.	Part No.	Description	Qty. Req.	Ref. No.	Part No.	Description	Qty. Req.
01	164747	MAIN HARNESS WIRING	1	03	164687	SLOTTED INSULATING TUBE	0.2
02	164748	CABLE CLIP	4				

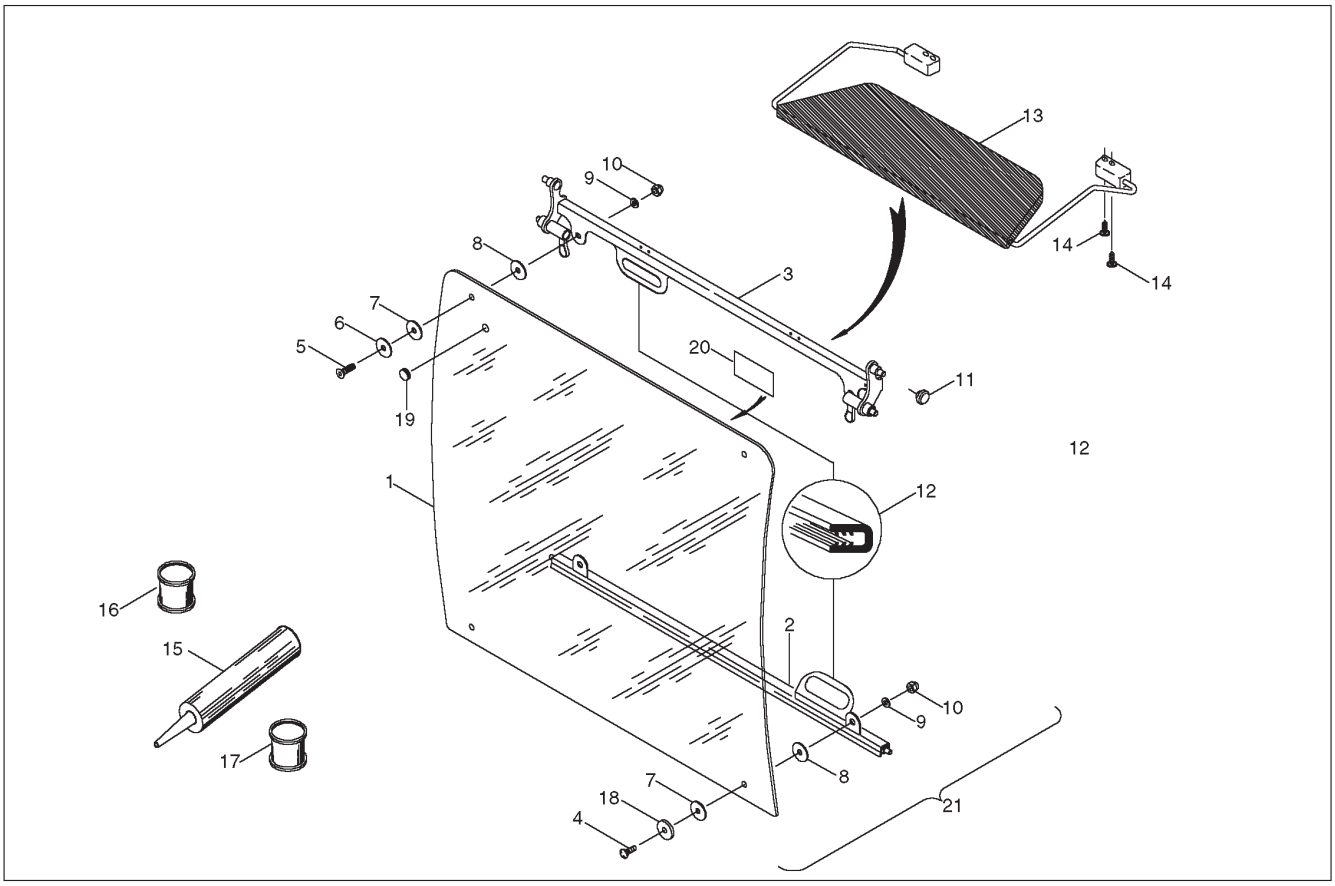

Ref. No.	Part No.	Description	Qty. Req.
01	160495	FRONT WINDOW	1
02	162602	RUBBER PLUG	1
03	162603	LOWER WINDSCREEN FRAME	1
04	162033	SCREW	2
05	651466	SCREW FCHC HS M8–1.2 X 20 8.8	2
06	161941	WIPER BLADE	2
07	160640	RUBBER WASHER	4
08	160639	RUBBER WASHER	4
09	161668	WASHER/GR A 8.4 ZO DIN134	4
10	161618	NUT/HEX DOMED CAP M8	4
11	160494	PVC–WASHERS	4
12	164691	EDGE PROTECTION	1
13	164770	SUN VISOR	1
14	162868	SCREW	4
15	164893	SILICON GLUE	1
16	164744	AKTIVATOR	1
17	164745	REMOVER 208	1
18	160641	PVC–WASHER	2
19	162601	RUBBER BUFFER	1
20	164854	STICKER	1
21	160989	WINDSCREEN	1

GE1202 – CABIN WINDOWS

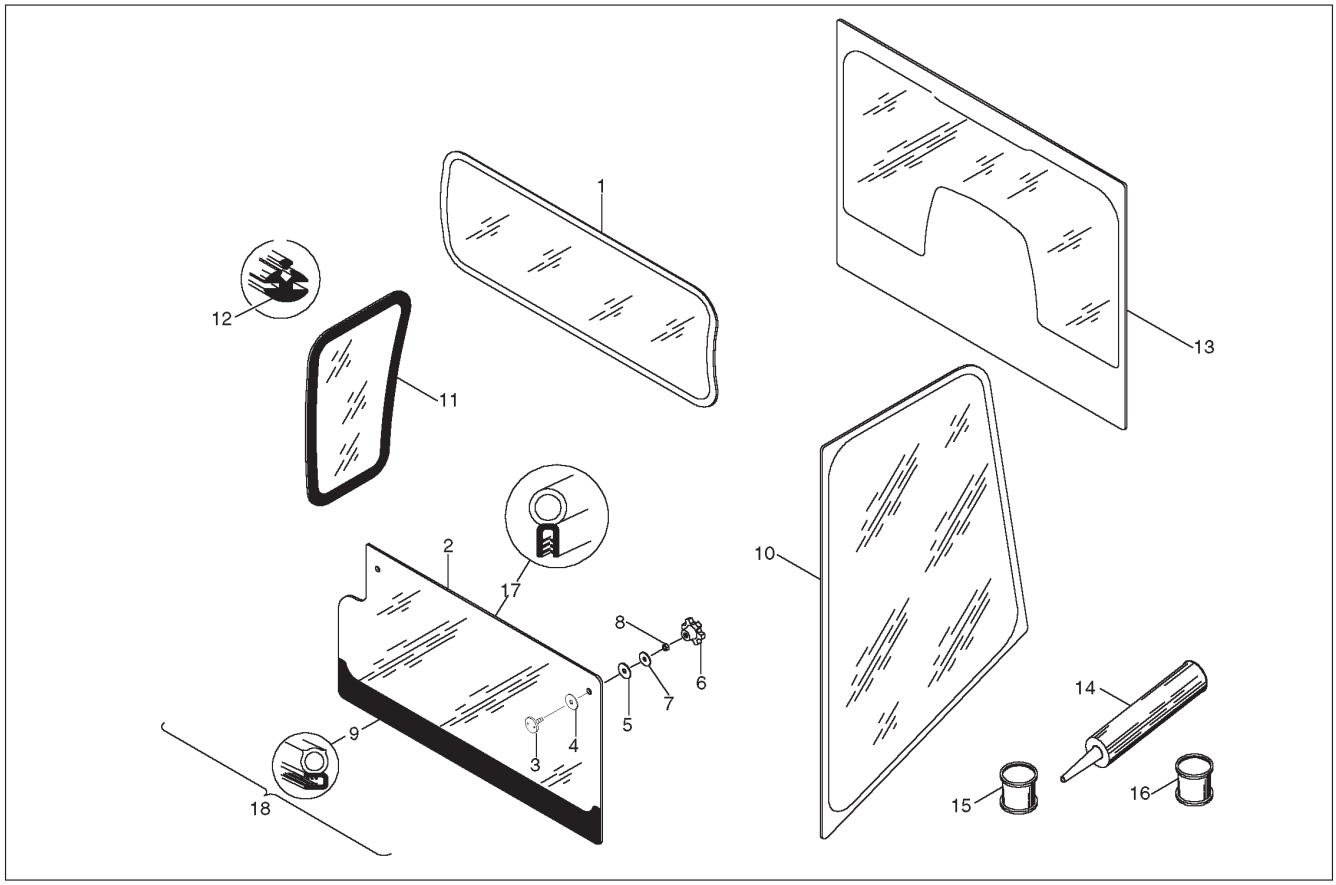

Ref. No.	Part No.	Description	Qty. Req.	Ref. No.	Part No.	Description	Qty. Req.
01	160496	FRONT WINDOW	1	10	164772	LEFT SIDE PANE	1
02	164749	FRONT WINDOW	1	11	164750	SIDE PANE	1.5
03	164671	PVC–WASHER	2	12	161396	RUBBER PROFILE	1
04	160640	RUBBER WASHER	2	13	164751	REAR WINDOW	1
05	160639	RUBBER WASHER	2	14	164893	SILICON GLUE	1
06	164672	NUT	2	15	164744	AKTIVATOR	1
07	162812	STRAP	2	16	164745	REMOVER 208	1
08	656048	HN M8–1.2	1.75	17	164752	HOSE PROFILE	0.87
09	162018	RUBBER PROFILE	1	18	164753	FRONT WINDOW	1

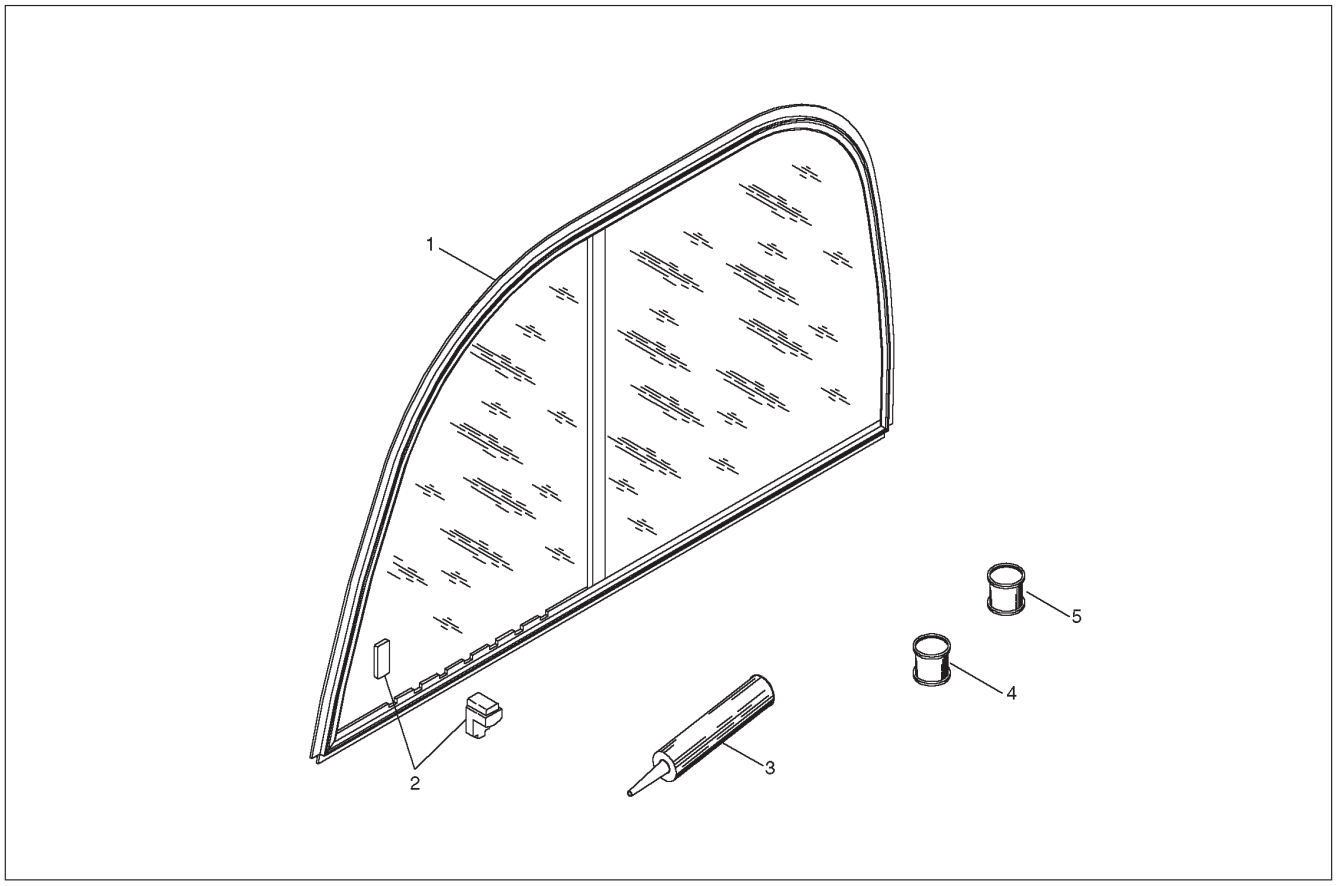

Ref. No.	Part No.	Description	Qty. Req.	Ref. No.	Part No.	Description	Qty. Req.
01	164777	SLIDING SIDE PANE	1	04	164744	AKTIVATOR	1
02	164684	LOCK	1	05	164745	REMOVER 208	1
03	164893	SILICON GLUE	1				

GE1202 – CABIN DOOR

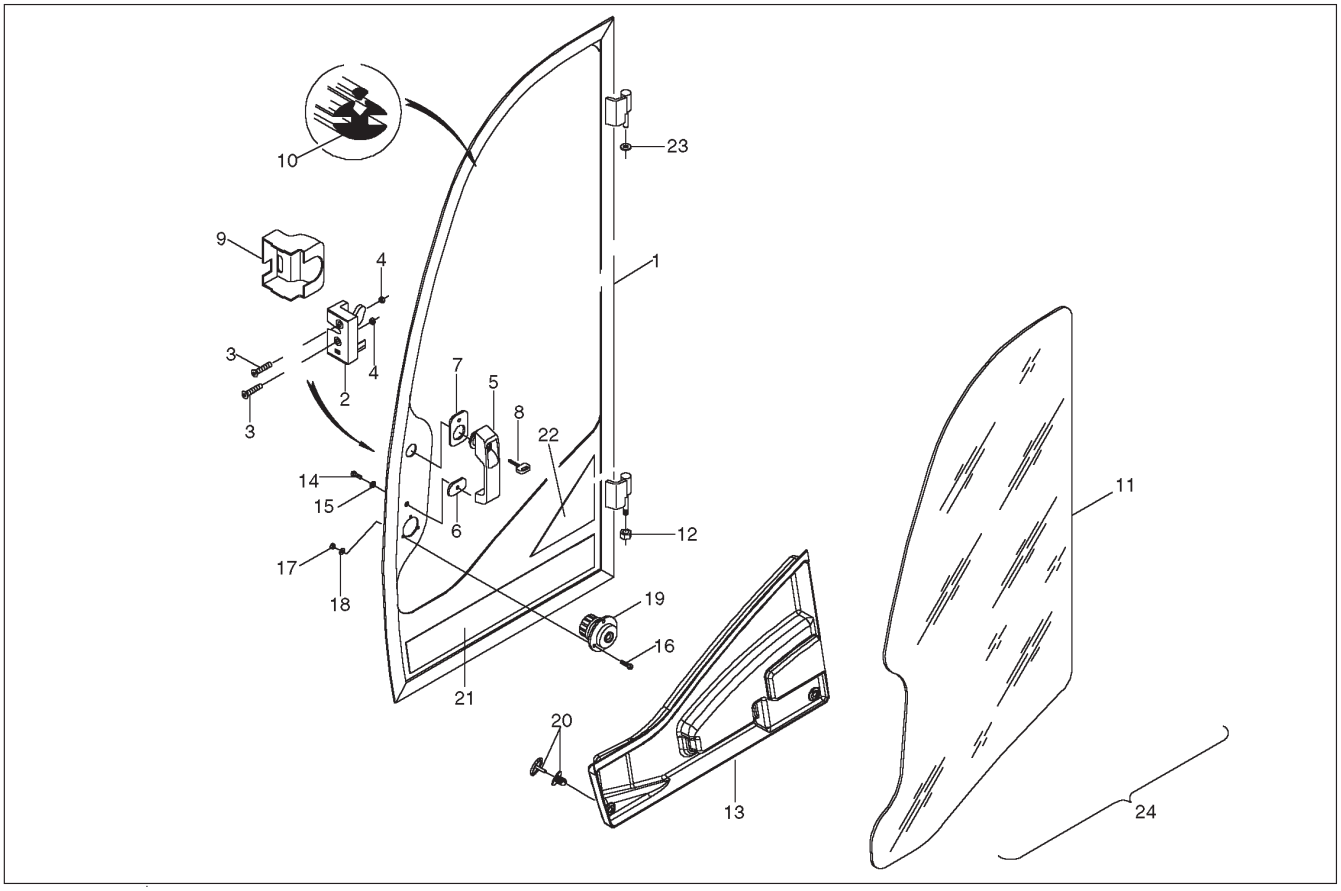

Ref. No.	Part No.	Description	Qty. Req.	Ref. No.	Part No.	Description	Qty. Req.
1	164759	FRAME OF A DOOR	1	13	164733	COVER	1
2	160525	LOCK	1	14	651424	CS M6–1.0 X 20 C 8.8	1
3	162864	SCREW	2	15	162813	WASHER	1
4	651458	HLN INS M8–1.2 8	2	16	164904	SCREW	3
5	161096	HANDLE	1	17	651456	HLN INS M5–.8 8	3
6	164700	SHIM	1	18	162925	WASHER	3
7	164701	SHIM	1	19	164674	DOOR LOCK	1
8	160713	KEY	2	20	164689	RIVET 11MM	2
9	160712	LOCK COVER	1	21	161974	STICKER	1
10	161396	RUBBER PROFILE	3.3	22	164862	STICKER	1
11	164760	DOOR WINDOW	1	23	164688	WASHER	2
12	651448	HLN INS M10–1.5	1	24	164761	CABIN DOOR LEFT COMPLETE	1

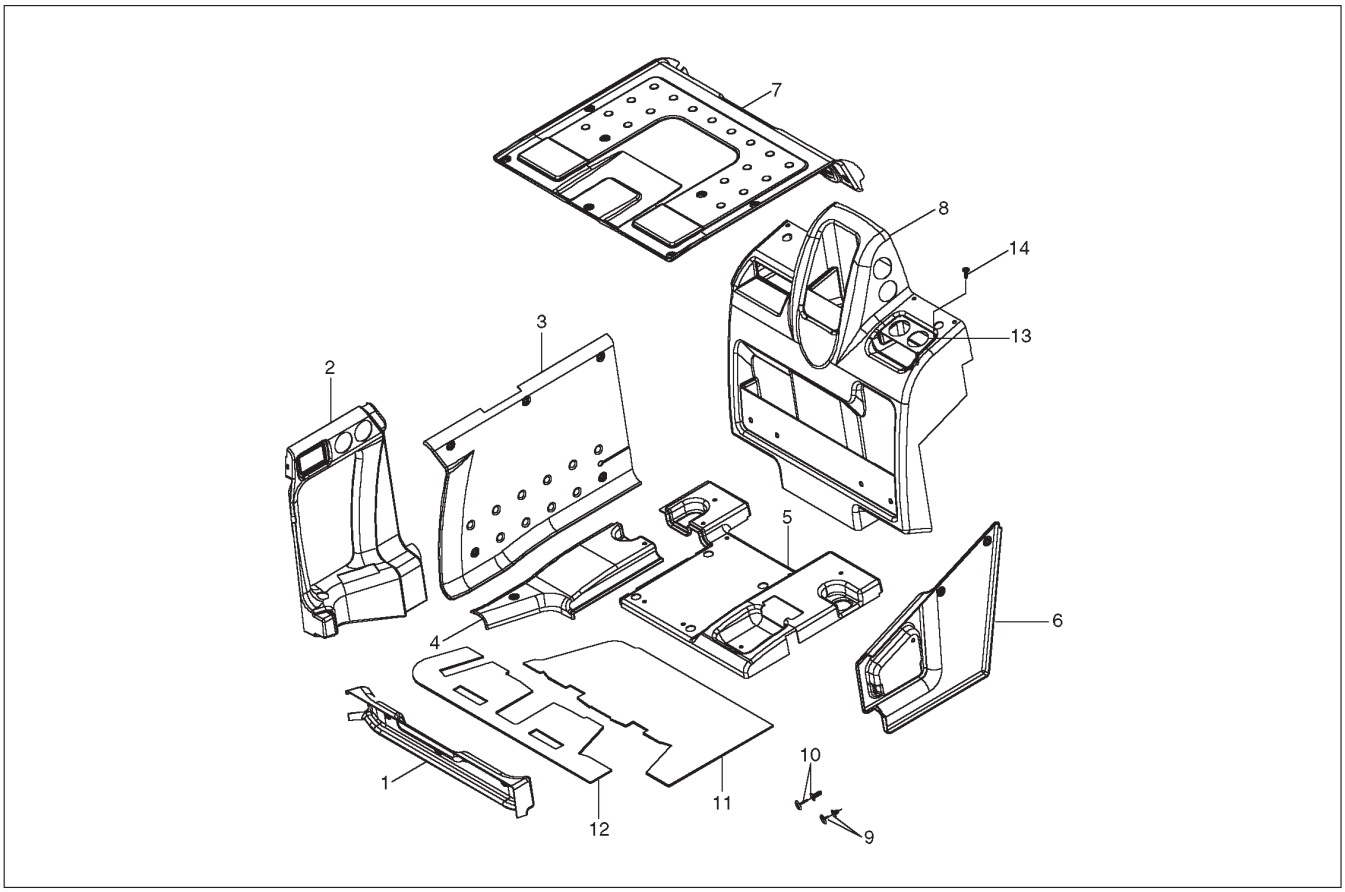

Ref. No.	Part No.	Description	Qty. Req.	Ref. No.	Part No.	Description	Qty. Req.
1	164732	COVER	1	8	164765	COVER REAR WALL	1
2	164736	COVER	1	9	164689	RIVET 11MM	38
3	164762	COVER	1	10	164754	RIVET 20MM	2
4	164764	COVER SEAT CONSOLE	1	11	164263	FOOT MAT 1	1
5	164763	COVER SEAT CONSOLE	1	12	164264	FOOT MAT 2	1
6	164734	COVER LEFT	1	13	164755	COVER	1
7	164735	ROOF COVER MAT	1	14	164894	SCREW	8

GE1202 – HEATER

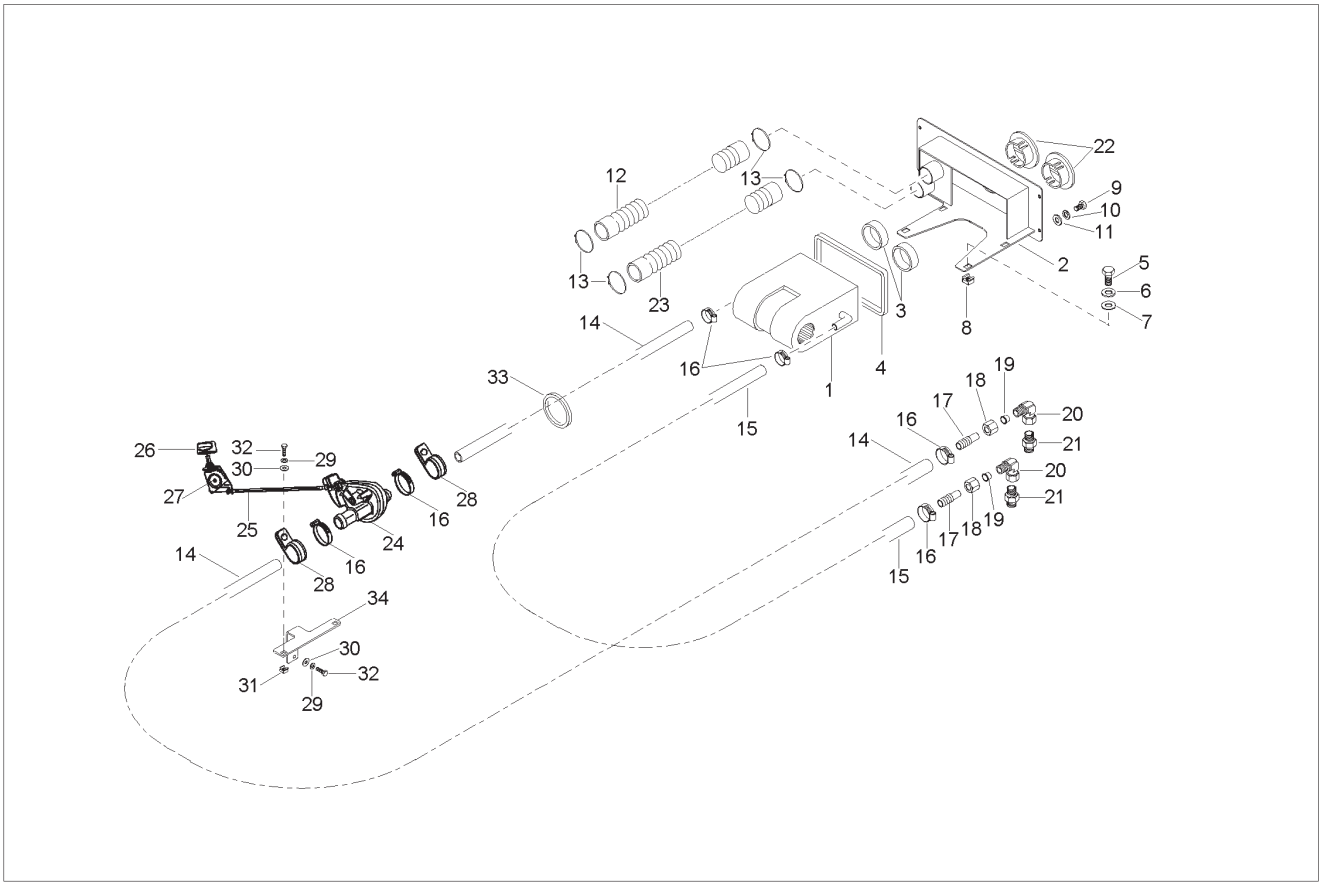

Ref. No.	Part No.	Description	Qty. Req.
1	161077	CAB HEATER	1
2	164731	BRACKET FOR CAB HEATING	1
3	162605	SCREW	2
4	162015	CABIN	0.7
5	656093	CS M8–1.2 X 16 C 8.8	4
6	161676	RING/SNAP S8	4
7	161667	WASHER/GR A 8.4 ZO	4
8	161615	NUT/CAGE M8	4
9	651424	CS M6–1.0 X 20 C 8.8	4
10	161675	RING/SNAP S6	4
11	161660	WASHER/GR A 6.4 ZO DIN125	4
12	164890	PROTECTION HOSE	1.5
13	162835	STICKER	4
14	161393	CAB HEATING HOSE	0.46
15	161393	CAB HEATING HOSE	0.55
16	162064	SCREW JOINT	6
17	160860	HOSE COVER	2
18	161423	NUT	2
19	161424	WASHER	2
20	161445	ANGLE	2
21	161496	SCREW JOINT	2
22	161102	NOZZLE	2
23	164890	PROTECTION HOSE	1.5
24	164725	VALVE	1
25	164727	BOWDEN CONTROL	1
26	164724	KNOB	1
27	164726	CLIP	1
28	164962	COLLAR	2
29	161675	RING/SNAP S6	4
30	161660	WASHER/GR A 6.4 ZO DIN125	4
31	161613	NUT/CAGE M6	2
32	651424	CS M6–1.0 X 20 C 8.8	4
33	164880	RUBBER BUSHING	1
34	164305	BRACKET/MOUNTING	1

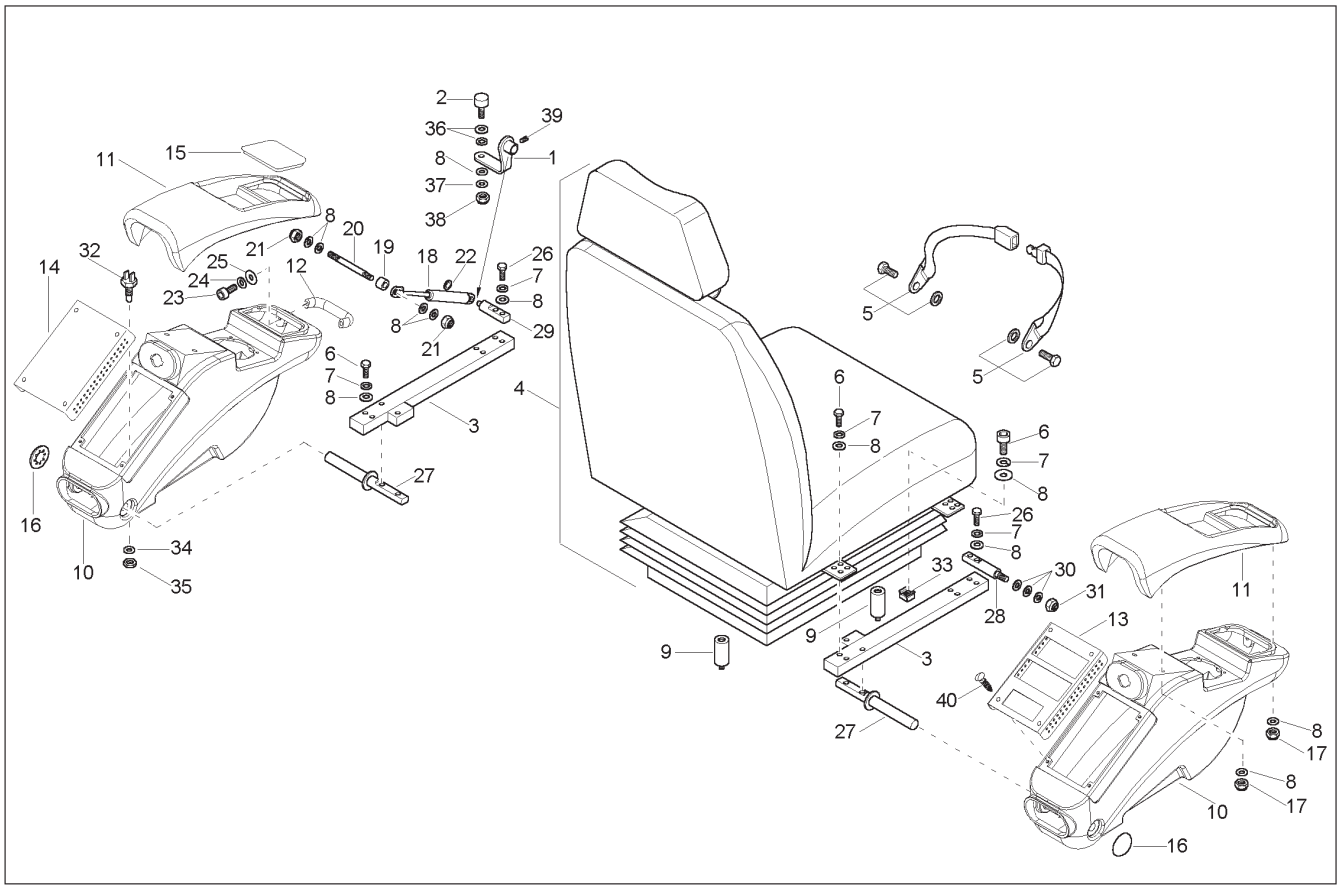

Ref. No.	Part No.	Description	Qty. Req.	Ref. No.	Part No.	Description	Qty. Req.
01	164669	PROFILE	1	21	161618	NUT/HEX DOMED CAP M8	2
02	164699	RUBBER–METAL–BUFFER	1	22	161848	QUICK FIX	1
03	164707	FIXING PLATE	2	23	656092	CS M6–1.0 X 12 C 8.8	2
04	162738	COVER	1	24	161675	RING/SNAP M6	2
05	161728	SEAT BELT	1	25	161660	WASHER/GR A6.4	2
06	656001	CS M8–1.2 X 20 C 8.8	16	26	651517	SHCS HS M8–1.2 X 30 8.8	8
07	161676	RING/SNAP S8	30	27	164977	PIN	2
08	163634	WASHER	20	28	164978	PIN	1
09	164986	LIMIT	2	29	164979	PIN	1
10	164969	CONTROL LEVER CONSOLE	2	30	161640	WASHER/GR A 10.5	3
11	164970	ARMREST	2	31	651448	HLN INS M10–1.5	1
12	164971	HANDLE	1	32	164980	MICRO SWITCH	1
13	164972	CONSOLE – RIGHT	1	33	161615	NUT/CAGE M8	4
14	164973	CONSOLE – LEFT	1	34	164981	NUT	1
15	164974	COVER	1	35	164982	WASHER	1
16	161730	PLUG	2	36	161667	WASHER/GR A 8.4	2
17	651458	HLN M8–1.2 8	8	37	656110	LW M8	1
18	160611	PNUEMATIC SPRING	1	38	656048	HN M8–1.2	1
19	164975	TUBE	1	39	651446	SHSS M8 X 12 45H CP	1
20	164976	PIN	1	40	161634	SCREW/C'SUNK HD M5 X 16	8

GE1202 – HEATER BOX

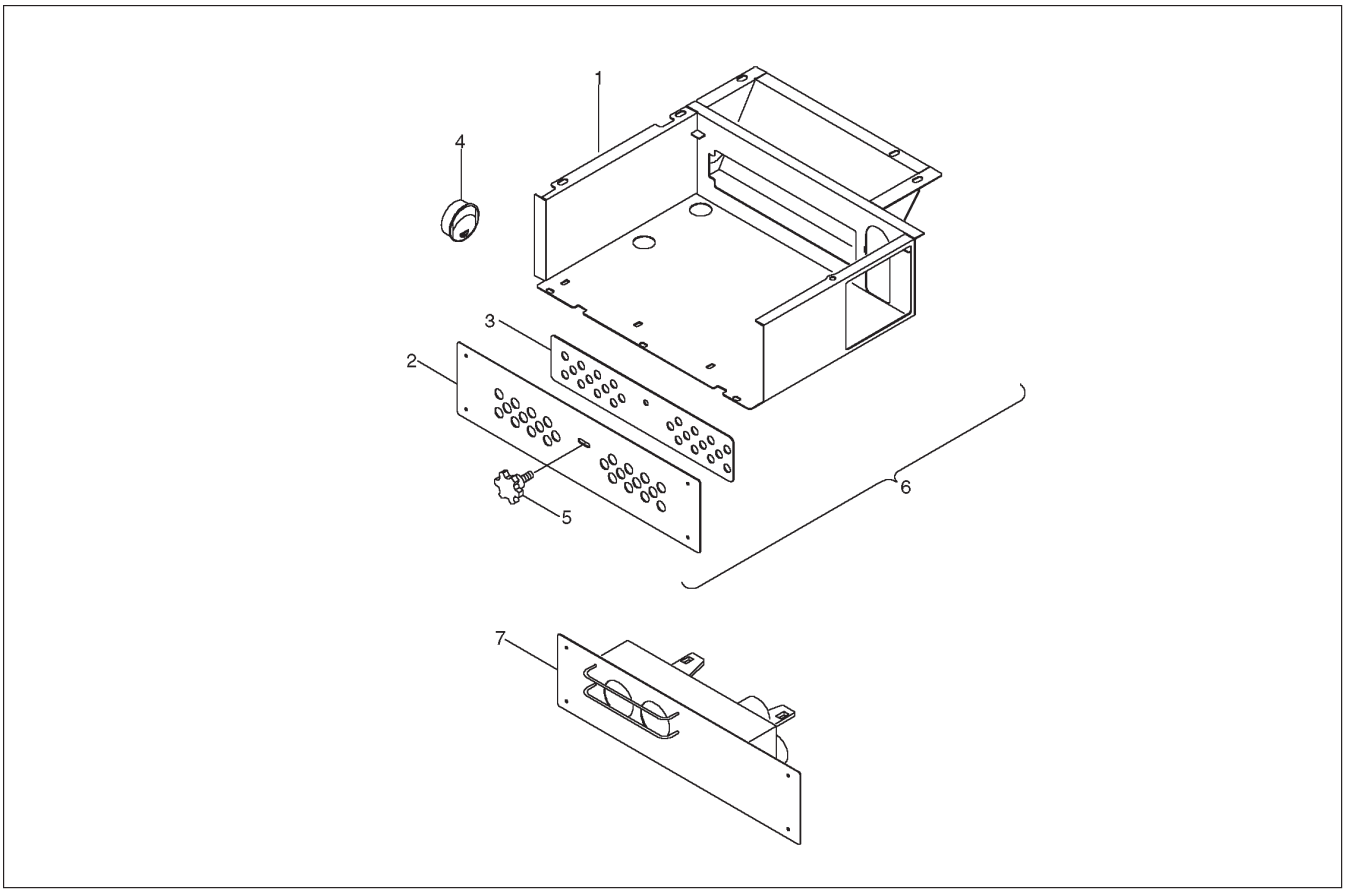

Ref. No.	Part No.	Description	Qty. Req.	Ref. No.	Part No.	Description	Qty. Req.
01	164756	CASE – AIR CONDITIONING PLANT	1	05	164983	KNOB M8 X 20	1
02	164757	BRACKET	1	06	164984	AIR CONDITIONING PLANT	1
03	164758	BRACKET 2	1	07	164985	CAB HEATING CONSOLE	1
04	164670	AIR NOZZLE	4				

GE1202 - ENGINE FAN, WATER PUMP & THERMOSTAT

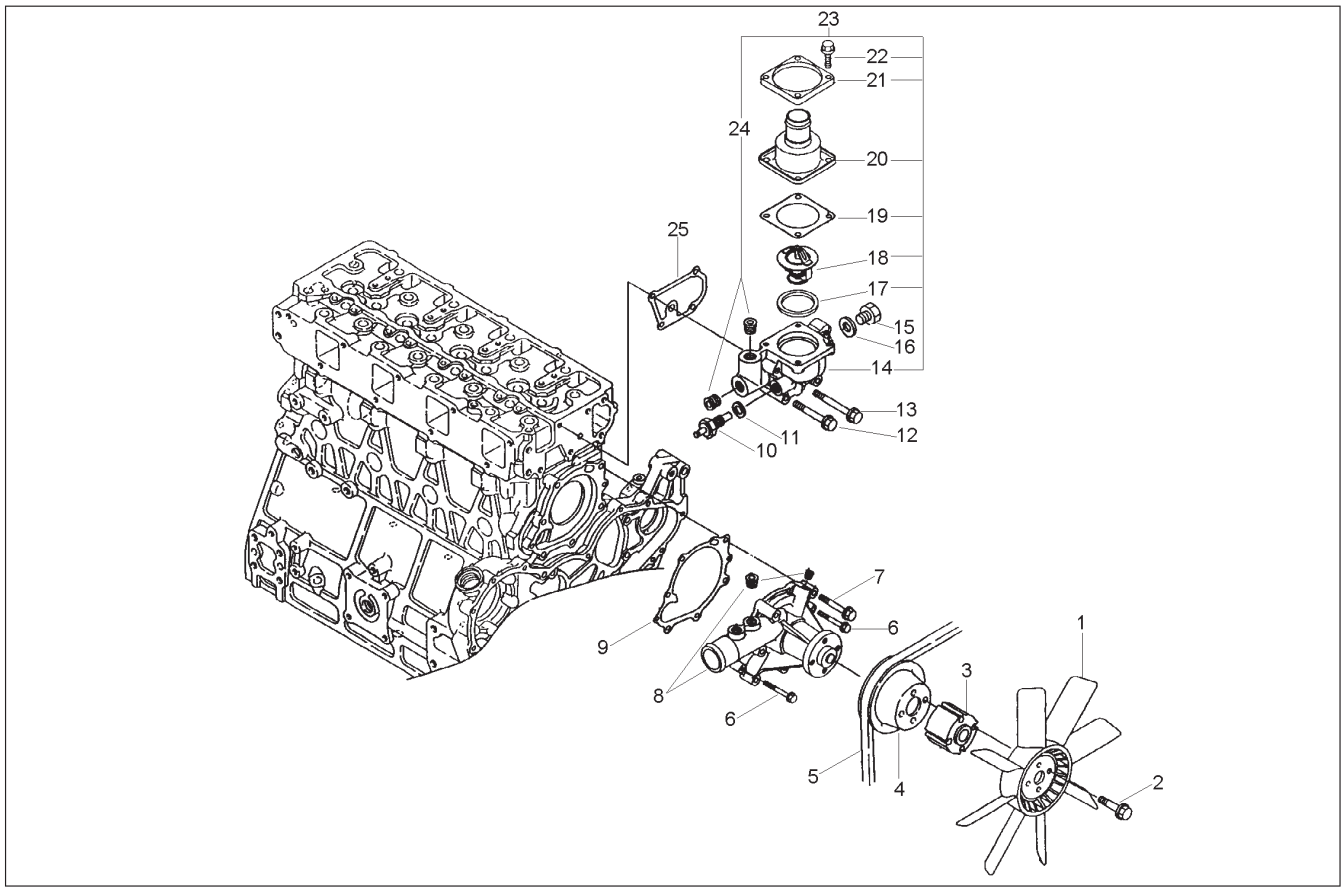

Ref. No.	Part No.	Description	Qty. Req.
1	164360	VENTILATOR	1
2	164362	SCREW	4
3	164361	SPACER	1
4	164432	PULLEY	1
5	164309	BELT	1
6	164433	SCREW	2
7	164434	SCREW	4
8	164431	WATER PUMP COMPLETE	1
9	164391	SEAL	1
10	425–34683	THERMO SWITCH	1
11	160427	SEAL	1
12	164330	SCREW	2
13	164435	SCREW	4
14	164440	THERMOSTAT HOUSING	1
15	164441	PLUG	1
16	160427	SEAL	1
17	164365	SEAL	1
18	164363	THERMOSTAT	1
19	164364	SEAL	1
20	164442	COVER	1
21	164439	PLATE	1
22	164438	SCREW	4
23	164437	THERMOSTAT HOUSING COMPLETE	1
24	164436	PLUG	2
25	164387	SEAL	1

GE1202 – GASKET SET & CYLINDER HONE

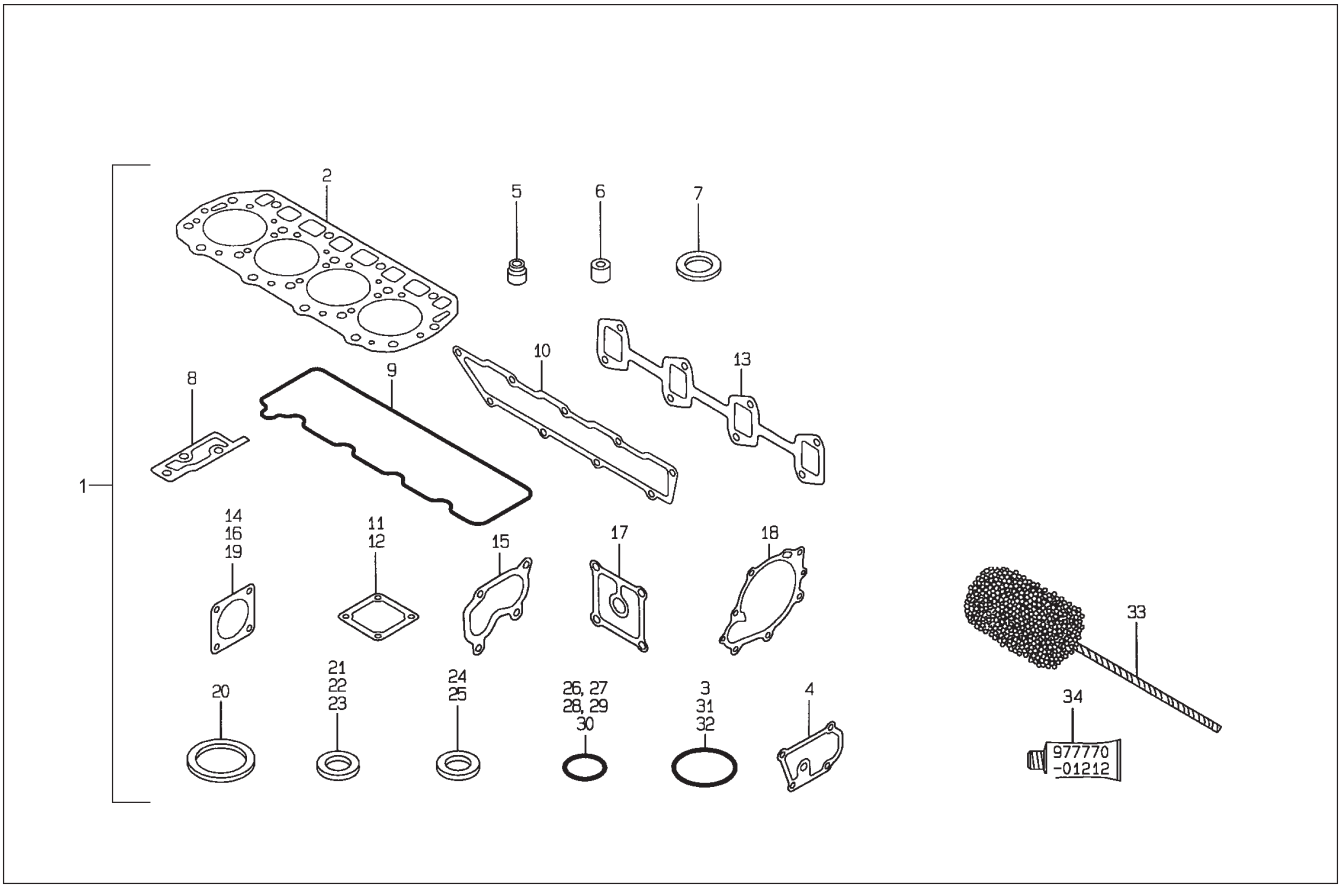

Ref. No.	Part No.	Description	Qty. Req.	Ref. No.	Part No.	Description	Qty. Req.
1	164386	SEAL KIT	1	18	164391	SEAL	1
2	164314	CYLINDER HEAD SEAL	1	19	164364	SEAL	1
3	164319	O–RING	2	20	164365	SEAL	1
4	164387	SEAL	1	21	164392	SEAL	4
5	164388	SEAL	8	22	164393	SEAL	4
6	164704	THERMAL SHIELD	4	23	164716	SEAL	8
7	164705	SEAL	4	24	164394	SEAL	6
8	164389	SEAL	1	25	160427	SEAL	2
9	164308	VALVE COVER SEAL	1	26	164395	O–RING	1
10	164333	SEAL	1	27	164778	O–RING	1
11	164320	SEAL	1	28	164396	O–RING	1
12	164321	SEAL	1	29	164666	O–RING	4
13	164348	SEAL	1	30	164715	O–RING	2
14	425–34652	SEAL	1	31	164779	O–RING	1
15	164349	SEAL	1	32	164397	O–RING	1
16	164353	SEAL	1	33	164312	BRUSH	1
17	164390	SEAL	1	34	164317	LIQUID SEAL	1

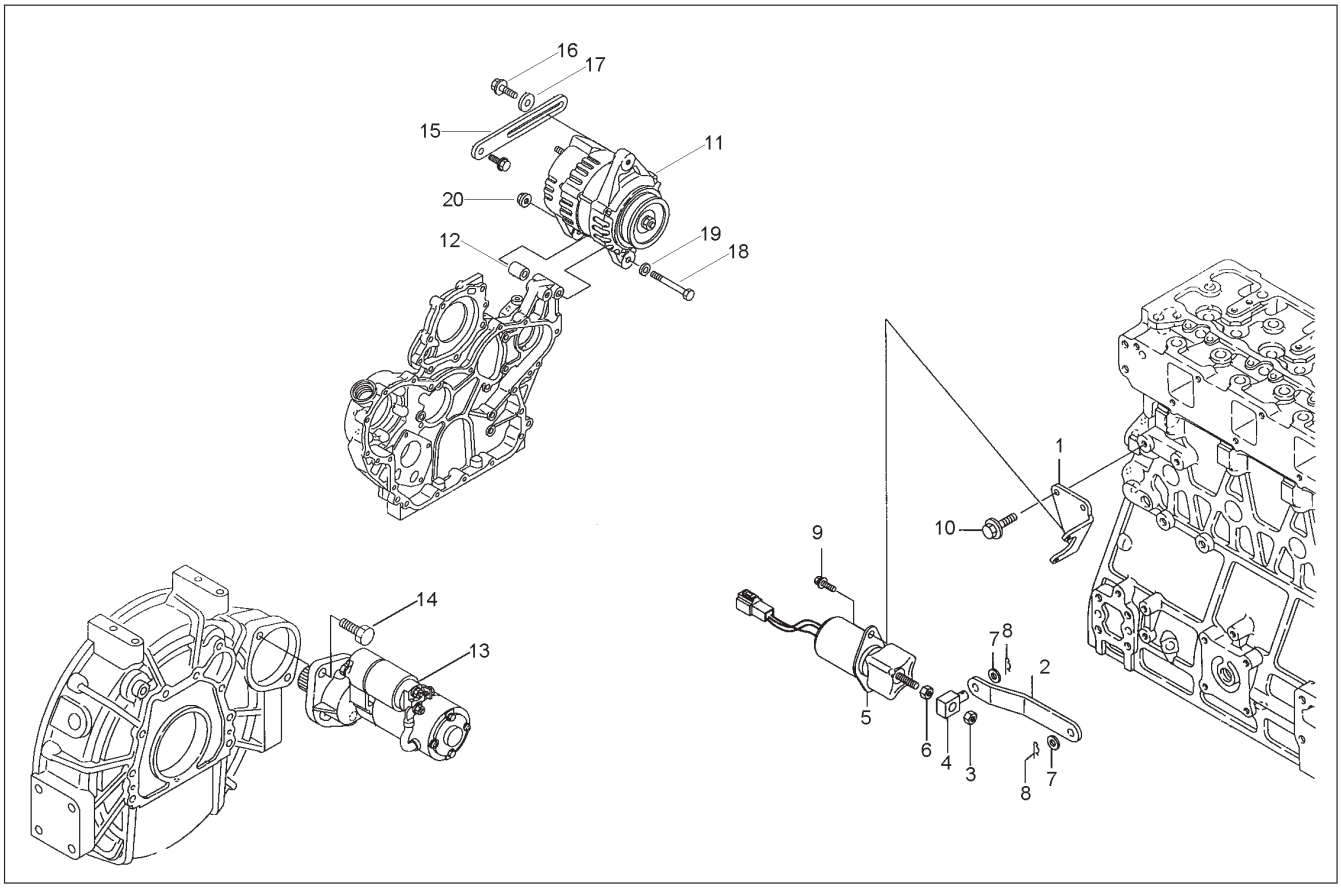

Ref. No.	Part No.	Description	Qty. Req.	Ref. No.	Part No.	Description	Qty. Req.
1	164374	BRACKET	1	11	164385	GENERATOR	1
2	164375	LINK	1	12	164384	SPACER	1
3	164376	NUT	1	13	164382	STARTER	1
4	164377	JOINT	1	14	164383	SCREW	2
5	425–36117	STOP SOLENOID	1	15	164446	ADJUSTER	1
6	164378	NUT	1	16	164447	SCREW	1
7	164379	WASHER	2	17	164448	SPACER	1
8	164380	SNAP PIN	2	18	164444	SCREW	1
9	164381	SCREW	2	19	164443	WASHER	1
10	164316	SCREW	2	20	164445	NUT	1

GE1202 – OIL FILTER & PAN

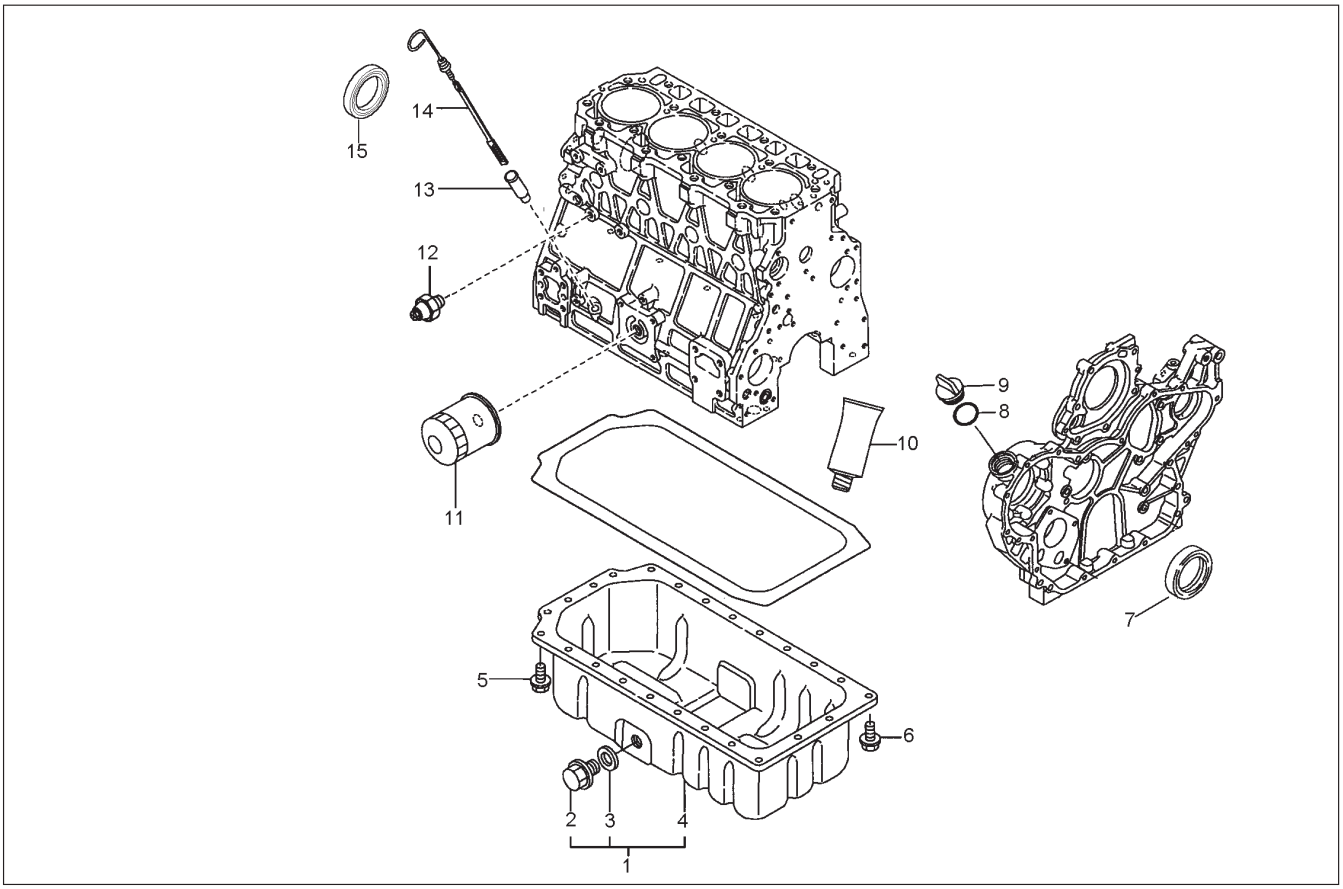

Ref. No.	Part No.	Description	Qty. Req.
01	164450	SUMP ASSY LUBE OIL SYS.	1
02	425–36121	SCREW	1
03	164719	SEAL	1
04	164318	SUMP ASSY LUBE OIL SYS.	1
05	164315	SCREW	22
06	164316	SCREW	4
07	164341	SEAL	1
08	164319	O–RING	1
09	164662	OIL COVER	1
10	164317	LIQUID SEAL	1
11	425–34635	OIL FILTER	1
12	425–36085	OIL PRESSURE SWITCH	1
13	164359	GUIDE	1
14	164358	DIPSTICK	1
15	164313	SEAL	1

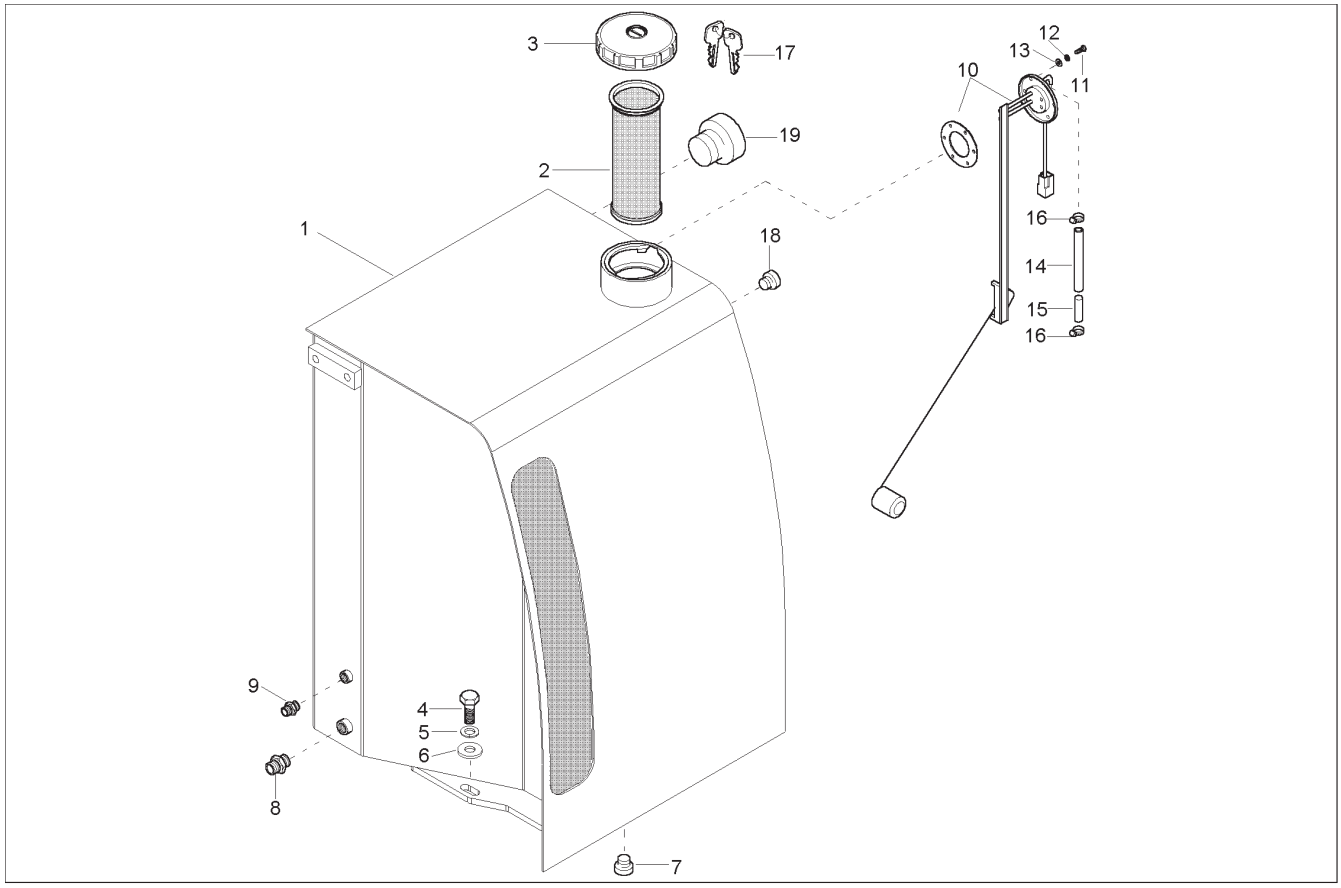

Ref. No.	Part No.	Description	Qty. Req.
01	164200	GAS–OIL STORAGE TANK	1
02	161059	STRAINER	1
03	164714	TANK COVER	1
04	656017	CS M12–1.7 X 35 C 8.8	4
05	161670	RING/SNAP S12	4
06	161645	WASHER/GR. A 13	4
07	161415	SCREW	1
08	161430	SCREW JOINT	1
09	161428	SCREW JOINT	1
10	161104	TRANSMITTER	1
11	163343	STICKER	6
12	161673	RING/SNAP S4	6
13	161658	WASHER/GR A 4.3	6
14	160844	TUBE	1
15	164921	GRUB SCREW	1
16	162504	COLLAR	2
17	160713	KEY	1
18	164924	SCREW	1
19	162929	PROTECTION CAP	1

GE1202 – FUEL INJECTION SYSTEM

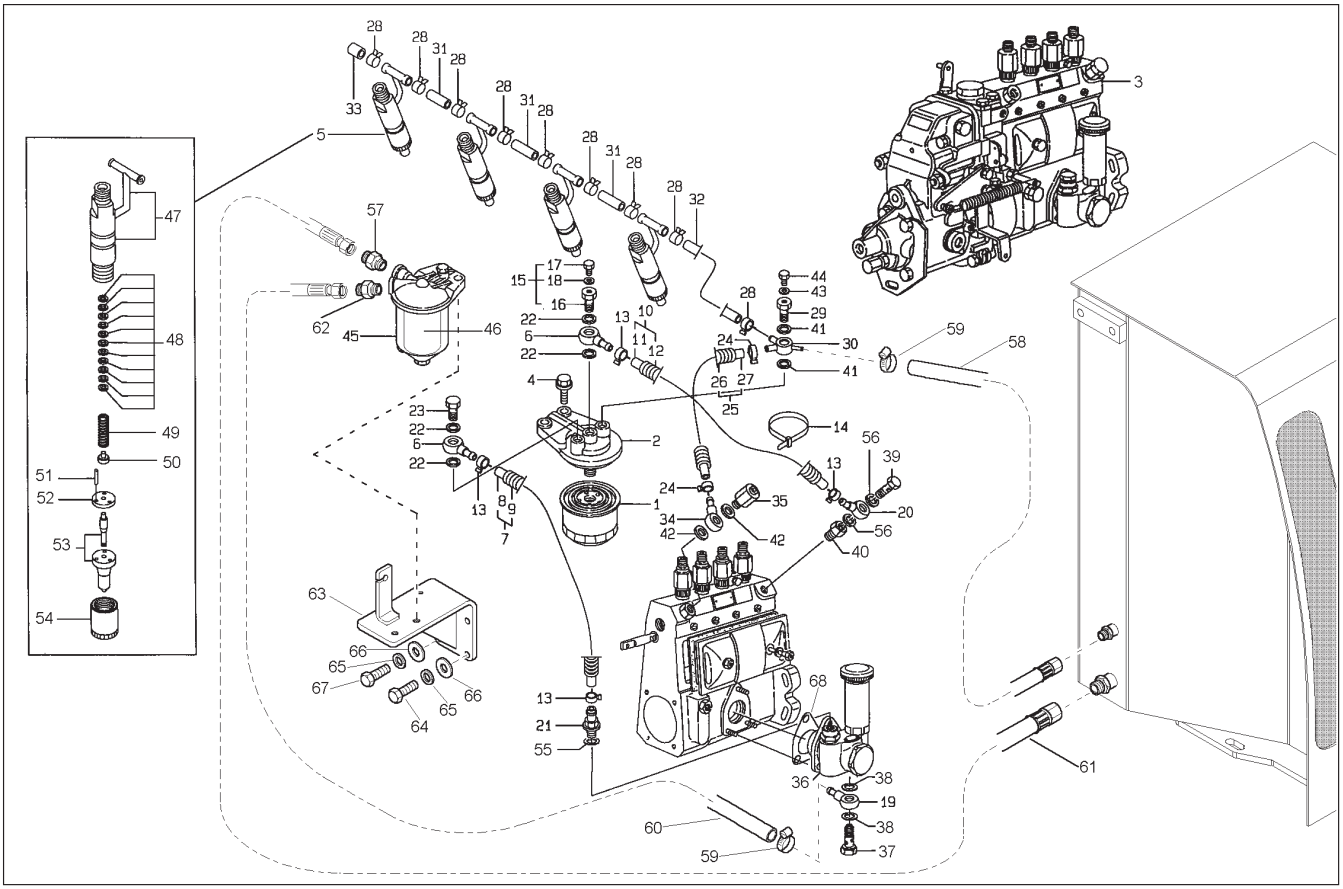

Ref. No.	Part No.	Description	Qty. Req.
01	425–36115	FUEL FILTER	1
02	164718	BRACKET	1
03	164430	FUEL INJECTION PUMP COMPLETE	1
04	164399	SCREW	2
05	164366	INJECTION VALVE COMPLETE	4
06	164728	RINGSTÜCK	2
07	164400	FUEL PIPE	1
08	164401	FUEL PIPE	1
09	164402	PROTECTOR	1
10	164403	PIPE	1
11	164404	PIPE	1
12	164402	PROTECTOR	1
13	164406	CLAMP 12	4
14	164407	CLAMP 140	1
15	164664	SCREW	1
16	164408	PIN	1
17	164665	VENT SCREW	1
18	164409	SEAL	1
19	164717	JOINT	1
20	164717	JOINT	1
21	164410	JOINT	1
22	164393	SEAL	4
23	164411	SCREW	1
24	164406	CLAMP 12	2
25	164412	PIPE	1
26	164405	PROTECTOR	1
27	164413	FUEL PIPE	1
28	164414	CLAMP 8	9
29	164415	SCREW	1
30	164416	JOINT	1
31	164417	FUEL PIPE	3
32	164418	FUEL PIPE	1
33	164419	CAP	1
34	164717	JOINT	1
35	164420	VALVE	1
36	164423	HOUSING – FEED PUMP	1
37	164424	PIN	1
38	164425	SEAL	2
39	164426	PIN	1
40	164427	FITTING PIECE	1

Ref. No.	Part No.	Description	Qty. Req.
41	164716	SEAL	2
42	164716	SEAL	2
43	164392	SEAL	1
44	164422	SCREW	1
45	164421	DIESEL OIL FILTER	1
46	164398	FILTER ELEMENT	1
47	164369	HOLDER ASSY. – NOZZLE	4
48	164663	ADJUSTING WASHER	4
49	164370	SPRING – NOZZLE	4
50	164371	SEAT – NOZZLE SPRING	4
51	164373	PIN	8
52	164372	PLATE – STOP	4
53	164367	INJECTION VALVE	4
54	164368	NUT	4
55	164429	SEAL	2
56	164428	SEAL	2
57	164950	SCREW JOINT	1
58	164811	HOSE	1
59	162504	COLLAR	2
60	164812	HOSE	1
61	164827	HOSE	1
62	164949	SCREW JOINT	1
63	164298	BRACKET	1
64	651473	SHCS HS M10–1.2 X 25 8.8	3
65	161669	RING/SNAP S10	4
66	161640	WASHER/GR A 10.5 ZO	4
67	162022	SCREW	1
68	164449	SEAL – FEED PUMP	1

GE1202 – FUEL PUMP

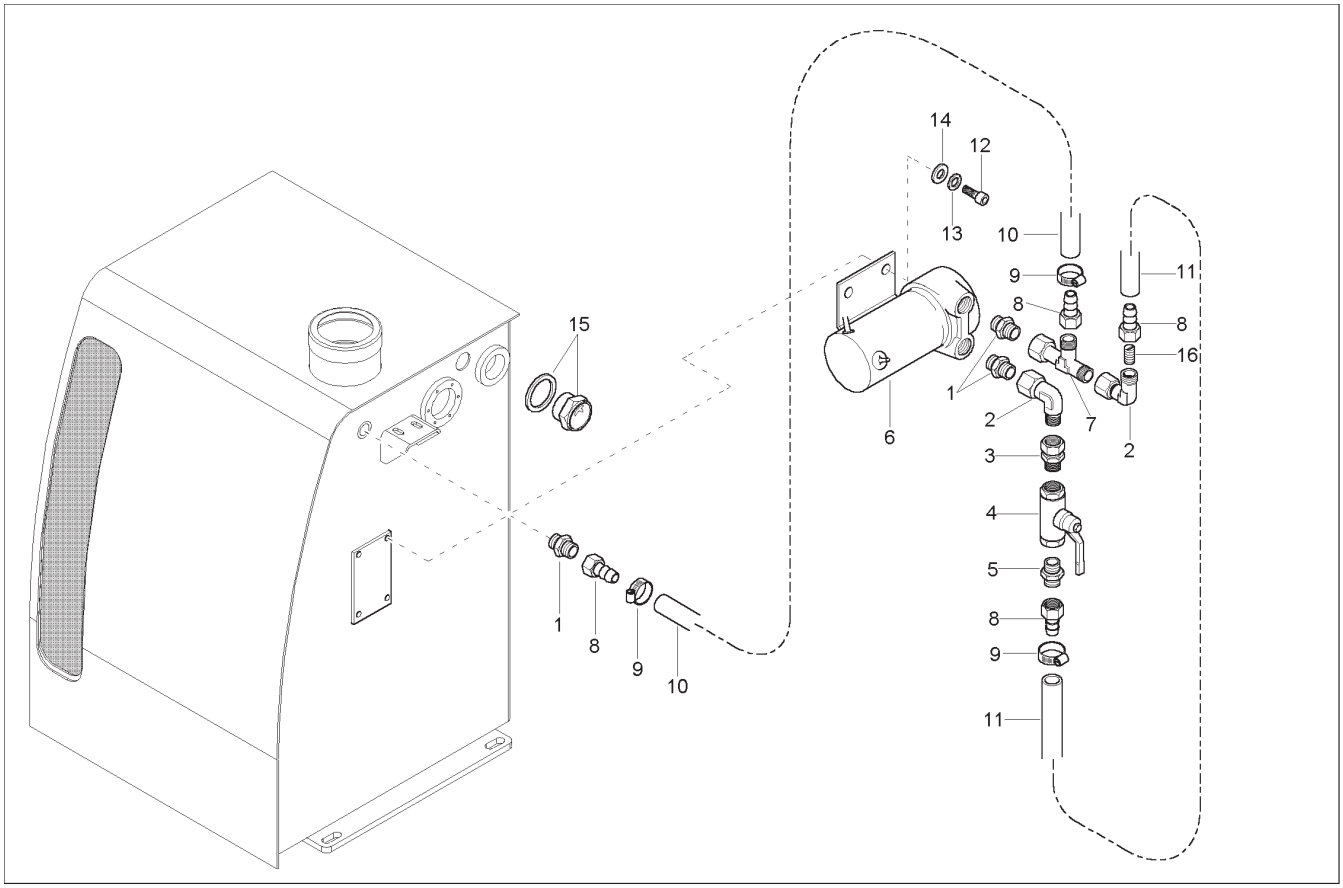

Ref. No.	Part No.	Description	Qty. Req.	Ref. No.	Part No.	Description	Qty. Req.
01	164930	SCREW JOINT	3	09	162064	SCREW JOINT	3
02	161445	ANGLE	2	10	164891	FUEL HOSE	0.5
03	161477	SCREW JOINT	1	11	164891	FUEL HOSE	2.3
04	160950	BALL VALVE	1	12	651503	SHCS HS M5–0.8 X 12 8.8	4
05	161504	SCREW JOINT	1	13	161674	RING/SNAP S5	4
06	164863	FUEL PUMP	1	14	161665	WASHER/GR A 5.3 ZO DIN9021	4
07	162062	BALL EXPANDER	1	15	160439	OIL LEVEL GLASS	1
08	160860	HOSE COVER	4	16	651445	SHSS M10 X 16 45H DP	1

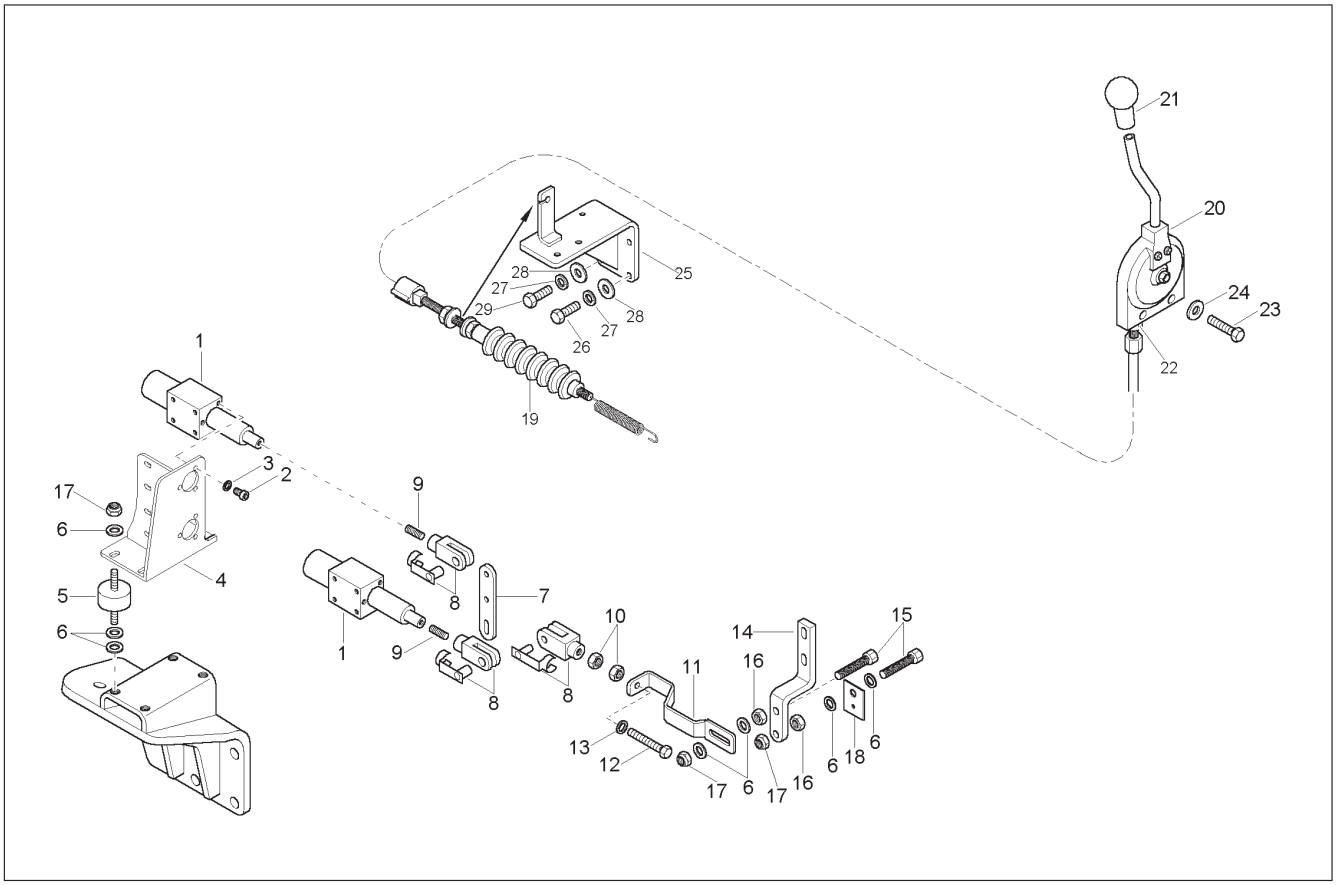

Ref. No.	Part No.	Description	Qty. Req.
01	164269	SPINDLE DRIVE	2
02	164898	SCREW	6
03	161659	WASHER/GR A 5.3	6
04	164304	CONSOLE	1
05	164651	RUBBER–BUFFER	4
06	161661	WASHER/GR A 8.4	16
07	164301	BRACKET	1
08	164965	YOKE	3
09	164903	GRUB SCREW	2
10	656047	HN M6–1.0	2
11	164303	THROTTLE PEDAL	1
12	651426	CS M6–1.0 X 35 C 8.8	1
13	161660	WASHER/GR A 6.4	1
14	164302	THROTTLE LINKAGE	1
15	164906	SCREW	1
16	656048	HN M8–1.2	2
17	162045	SCREW	2
18	164300	BRACKET	1
19	164712	CABLE	1
20	164711	GAS LEVER	1
21	162398	PROTECTION	1
22	164915	NUT	1
23	164895	SCREW	2
24	163348	SCREW	2
25	164298	BRACKET	1
26	651473	SHCS HS M10–1.2 X 25 8.8	3
27	161669	RING/SNAP S10	4
28	161640	WASHER/GR A 10.5	4
29	162022	SCREW	1

GE1202 – MOTOR MOUNTS

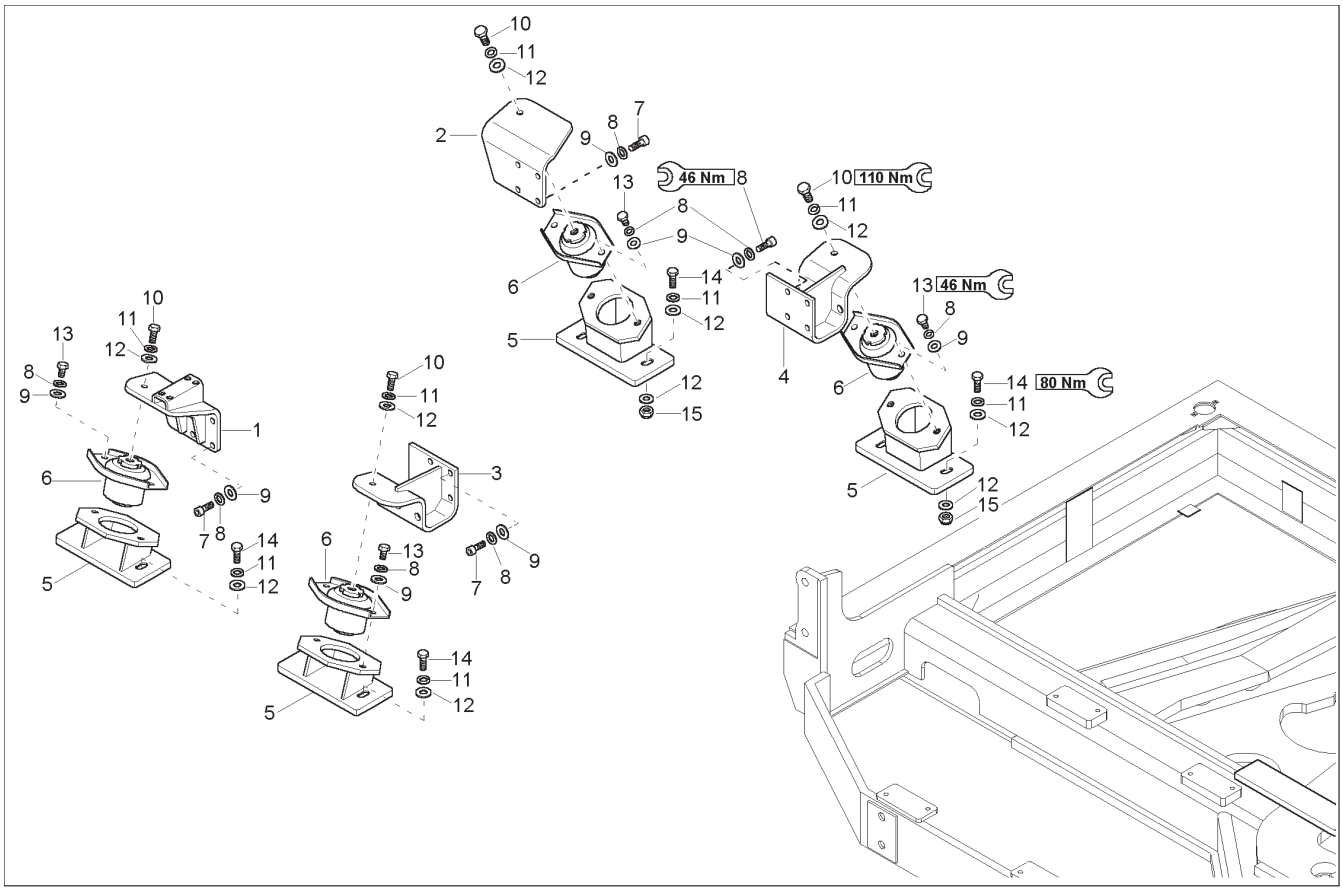

Ref. No.	Part No.	Description	Qty. Req.
01	164293	ENGINE CARRIER	1
02	164292	ENGINE CARRIER	1
03	164297	ENGINE CARRIER	1
04	164294	ENGINE CARRIER	1
05	164291	BRACKET	4
06	161113	HYDRO SUSPENSION	4
07	651475	SHCS HS M10–1.2 X 30 8.8	23
08	161669	RING/SNAP S10	31
09	161640	WASHER/GR A 10.5	31
10	651406	CS M12–1.7 X 35 C 10.9	4
11	161670	RING/SNAP S12	12
12	161645	WASHER/GR. A 13	66
13	651391	CS M10–1.5 X 20 C 8.8	8
14	651408	CS M12–1.7 X 40 C 10.9	8
15	651449	HLN INS M12–1.7	4

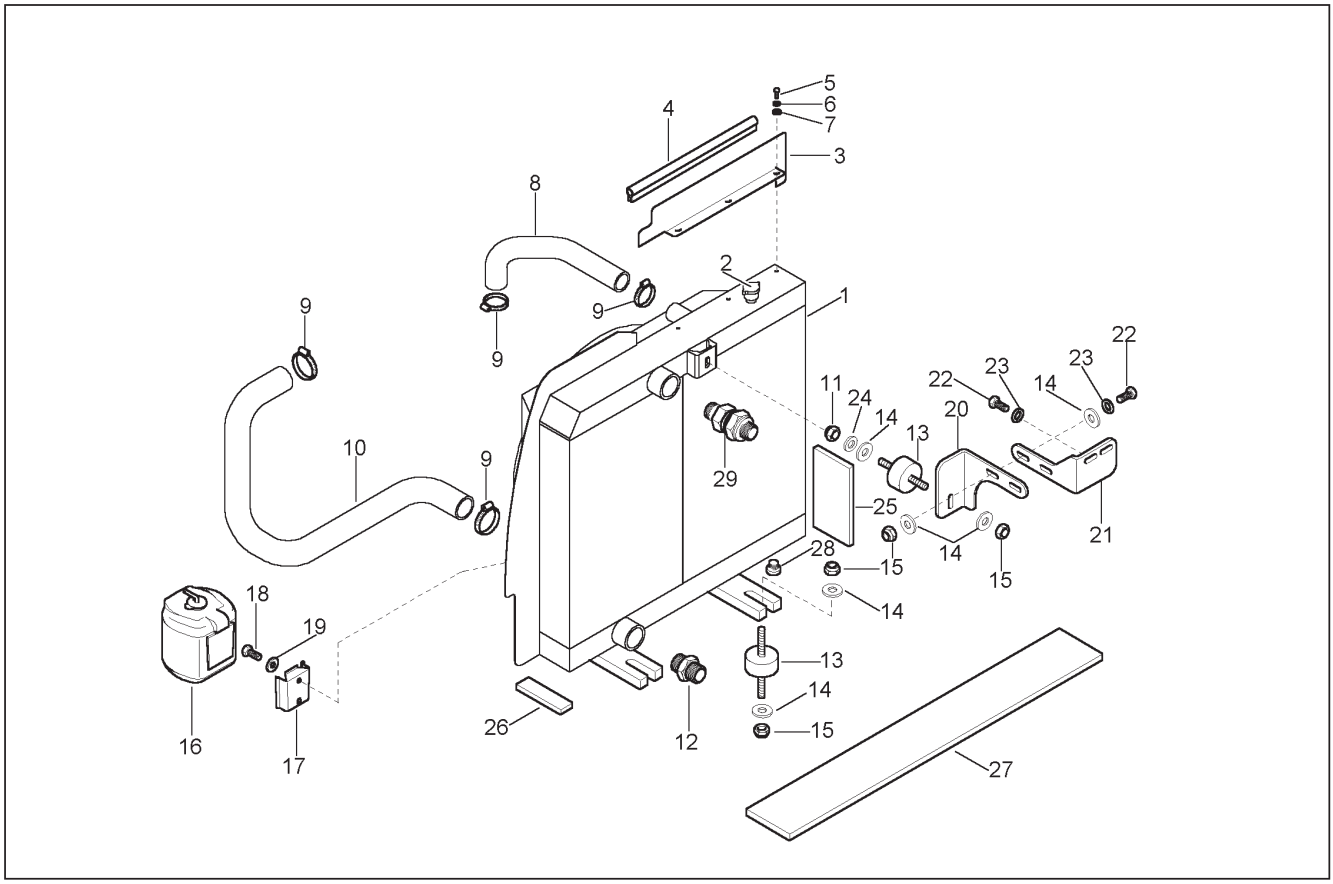

Ref. No.	Part No.	Description	Qty. Req.
1	164466	COOLER	1
2	164310	PLUG	1
3	164296	BRACKET	1
4	162017	RUBBER PROFILE	0.6
5	656092	CS M6–1.0 X 12 C 8.8	3
6	161675	RING/SNAP S6	3
7	161666	WASHER/GR A 6.4	3
8	164290	COOLING WATER HOSE 2	1
9	164963	COLLAR	4
10	164289	COOLING WATER HOSE 1	1
11	656102	HN M10–1.2	1
12	161433	SCREW JOINT	1
13	164851	RUBBER METAL BUFFER	5
14	161663	WASHER/GR A 10.5	6
15	651448	HLN INS M10–1.5	5
16	425–36171	EXPANSION CONTAINER	1
17	425–36172	BRACKET	1
18	656093	CS M8–1.2 X 16 C 8.8	2
19	161667	WASHER/GR A 8.4	2
20	164483	BRACKET	1
21	164482	BRACKET	1
22	656001	CS M8–1.2 X 20 C 8.8	4
23	161676	RING/SNAP S8	4
24	161669	RING/SNAP S10	1
25	164648	ISOLATION MAT	1
26	164646	ISOLATION MAT	4
27	164645	ISOLATION MAT	1
28	164311	SCREW	1
29	164953	CHECK VALVE	1

GE1202 – AIR CLEANER

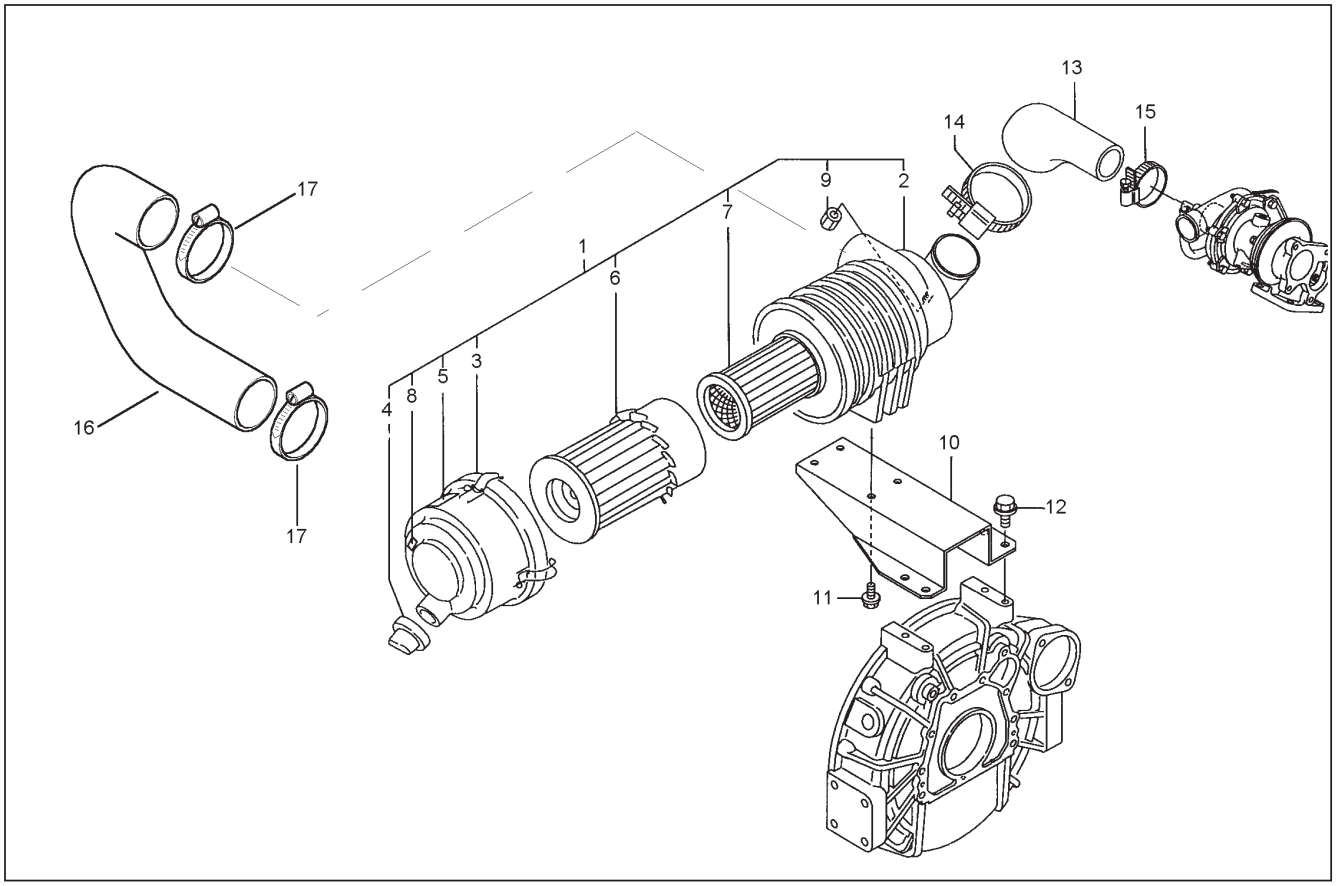

Ref. No.	Part No.	Description	Qty. Req.
01	164322	AIR FILTER COMPLETE	1
02	164323	HOUSING	1
03	164329	COVER	1
04	164328	DUST VALVE	1
05	164338	LABEL	1
06	164306	AIR FILTER	1
07	164307	AIR FILTER	1
08	164340	MARKING	1
09	164337	DIRT INDICATOR	1
10	164327	BRACKET	1
11	164316	SCREW	4
12	164326	SCREW	4
13	164335	AIR HOSE	1
14	164325	HOSE COLLAR	1
15	164324	HOSE COLLAR	1
16	164288	SUCTION HOSE	1
17	164964	COLLAR	2

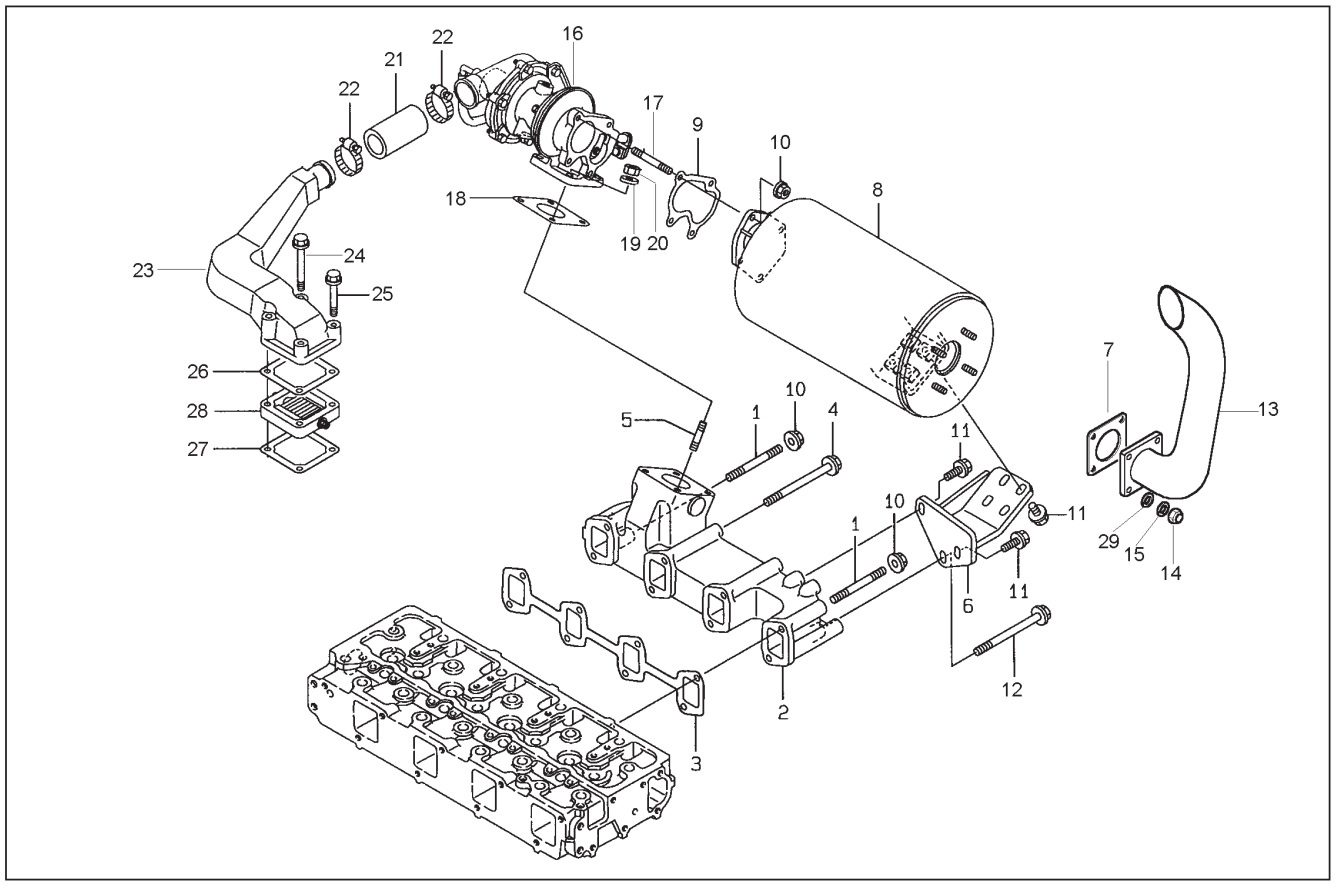

Ref. No.	Part No.	Description	Qty. Req.
01	164350	SCREW	2
02	164342	MANIFOLD – AIR EXHAUST	1
03	164348	SEAL	1
04	164352	SCREW	5
05	164351	SCREW	4
06	164343	EXHAUST SUPPORT	1
07	425–34652	SEAL	1
08	164344	SILENCER	1
09	164349	SEAL	1
10	164345	NUT	6
11	164346	SCREW	6
12	164347	SCREW	1
13	164295	EXHAUST TUBE	1
14	656048	HN M8–1.2	4
15	161676	RING/SNAP S8	4
16	164356	TURBOSUPERCHARGER	1
17	164357	SCREW	4
18	164353	SEAL	1
19	164354	WASHER	4
20	164355	NUT	4
21	164334	RUBBER HOSE	1
22	425–36131	BRACKET	2
23	164336	BEND	1
24	164332	SCREW	2
25	164331	SCREW	2
26	164320	SEAL	1
27	164321	SEAL	1
28	164339	HEATER AIR	1
29	161661	WASHER/GR A 8.4	4

GE1202 – HYDRAULIC PUMP DRIVE

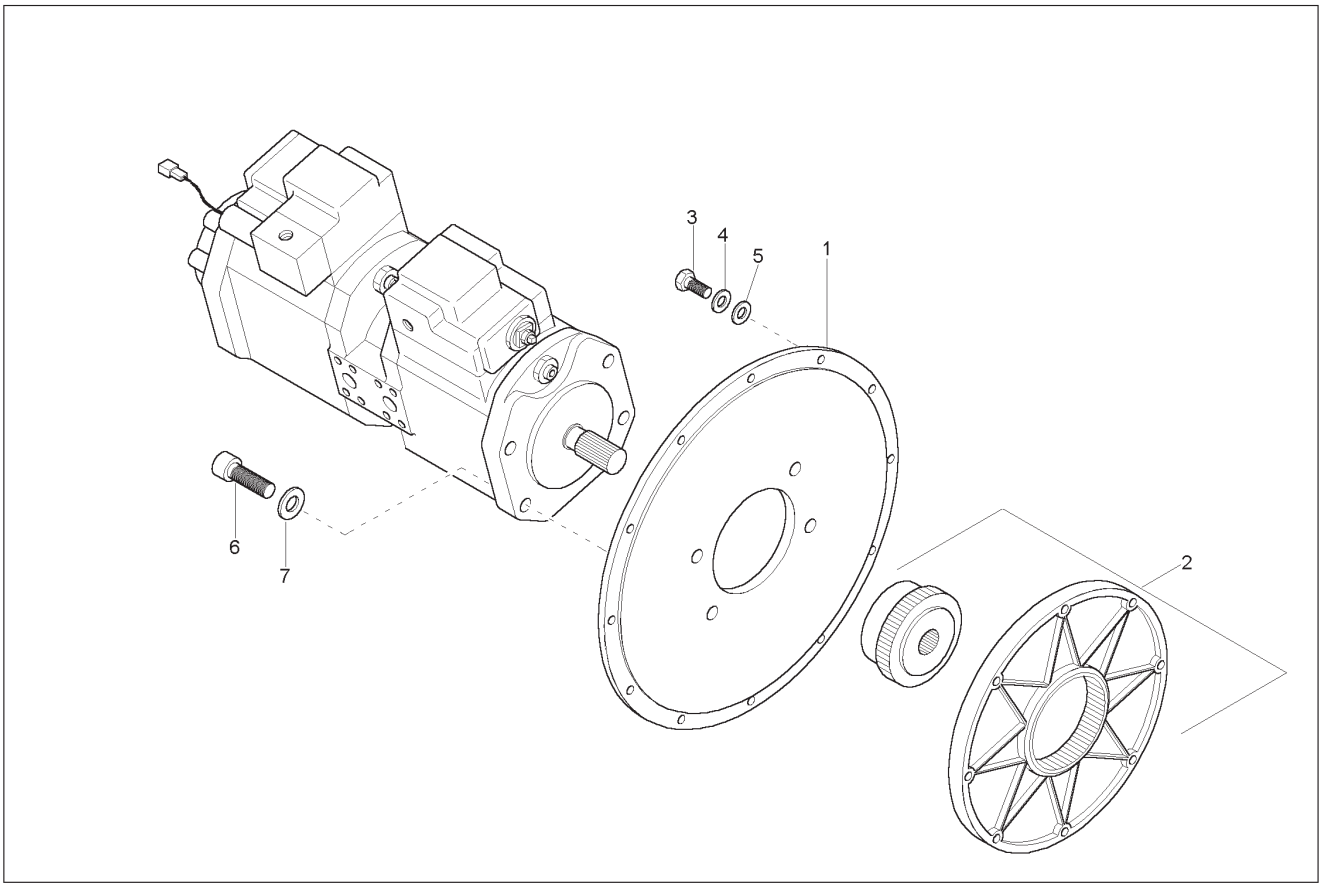

Ref. No.	Part No.	Description	Qty. Req.	Ref. No.	Part No.	Description	Qty. Req.
01	164496	PUMP BRACKET	1	05	161640	WASHER/GR A 10.5	12
02	164495	COUPLER	1	06	651497	SHCS HS M16–1.5 X 50 10.9	4
03	651396	CS M10–.5 X 30 C 8.8	12	07	161672	RING/SNAP S16	4
04	161669	RING/SNAP S10	12	08	164928	PLUG	1

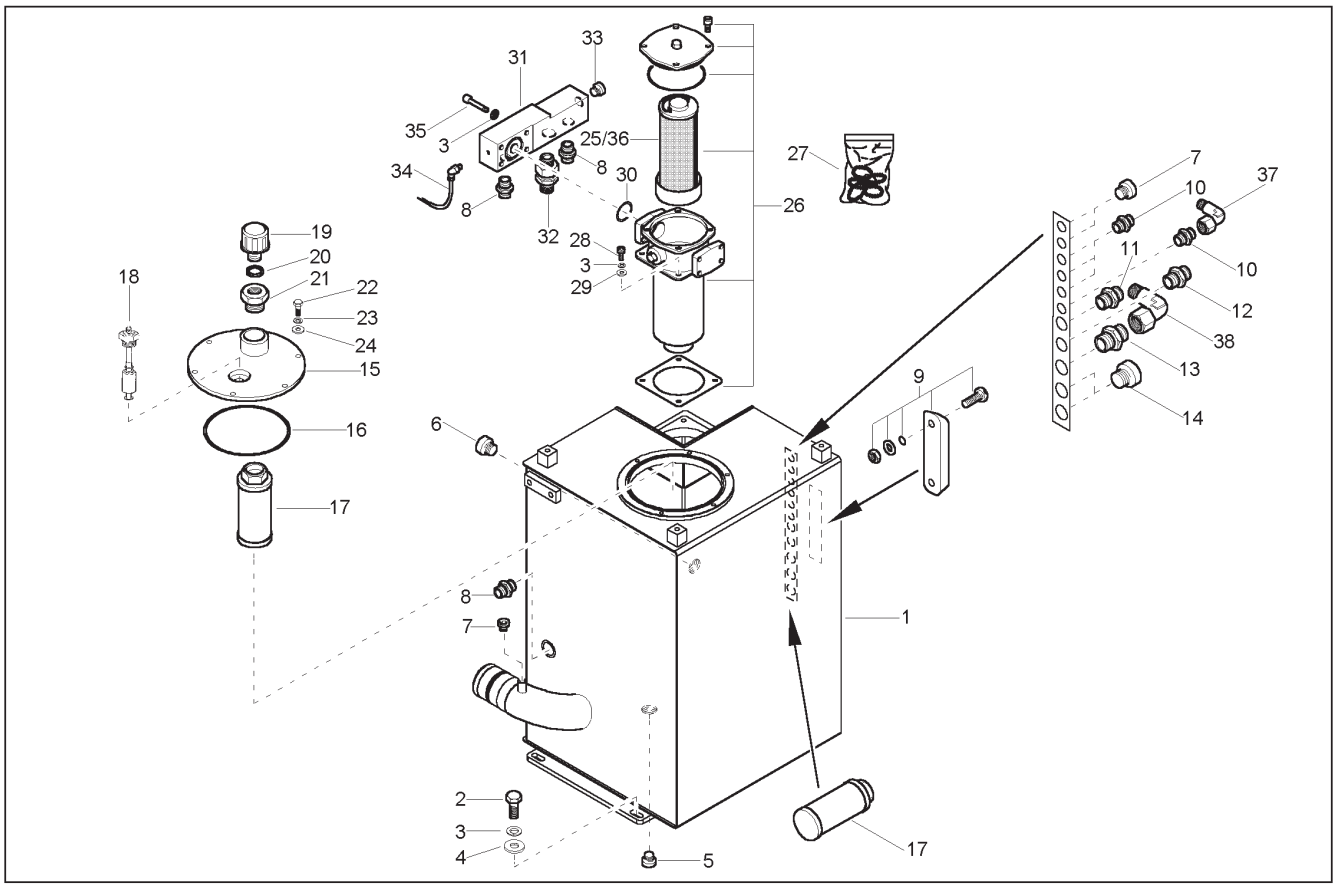

Ref. No.	Part No.	Description	Qty. Req.	Ref. No.	Part No.	Description	Qty. Req.
01	164201	HYDR. OIL STORAGE TANK	1	20	161579	SEAL	1
02	656017	CS M12–1.7 X 35 C 8.8	4	21	164934	REDUCTION JOINT	1
03	161670	RING/SNAP S12	12	22	651393	CS M10–1.5 X 25 C 8.8	6
04	161645	WASHER/GR. A 13	4	23	161669	RING/SNAP S10	6
05	161415	SCREW	1	24	161640	WASHER/GR A 10.5	6
06	164905	SCREW	1	25	164233	HYDRAULIC OIL FILTER – ELEMENT	1
07	161414	SCREW	4	26	164231	HYDRAULIC OIL FILTER COMPLETE	1
08	161433	SCREW JOINT	3	27	164234	SEAL KIT	1
09	160948	OIL LEVEL GLASS	1	28	651480	SHCS HS M12–1.7 X 30 10.9	4
10	161426	SCREW JOINT	4	29	161640	WASHER/GR A 10.5	4
11	161429	SCREW JOINT	1	30	164966	O–RING	1
12	161463	SCREW JOINT	1	31	164480	HEADER	1
13	161431	SCREW JOINT‘	1	32	164952	NON RETURN VALVE	1
14	164924	SCREW	2	33	164925	SCREW	1
15	164220	COVER	1	34	163001	RUBBER BUSHING	1
16	161577	O–RING	1	35	162122	STICKER	4
17	164193	FILTER	2	36	164232	HYDRAULIC OIL FILTER – ELEMENT	1
18	164189	LIQUID LEVEL SWITCH	1	37	161443	ANGLE	1
19	160949	FILTER	1	38	161446	ANGLE	1

GE1202 – HYDRAULIC PUMP

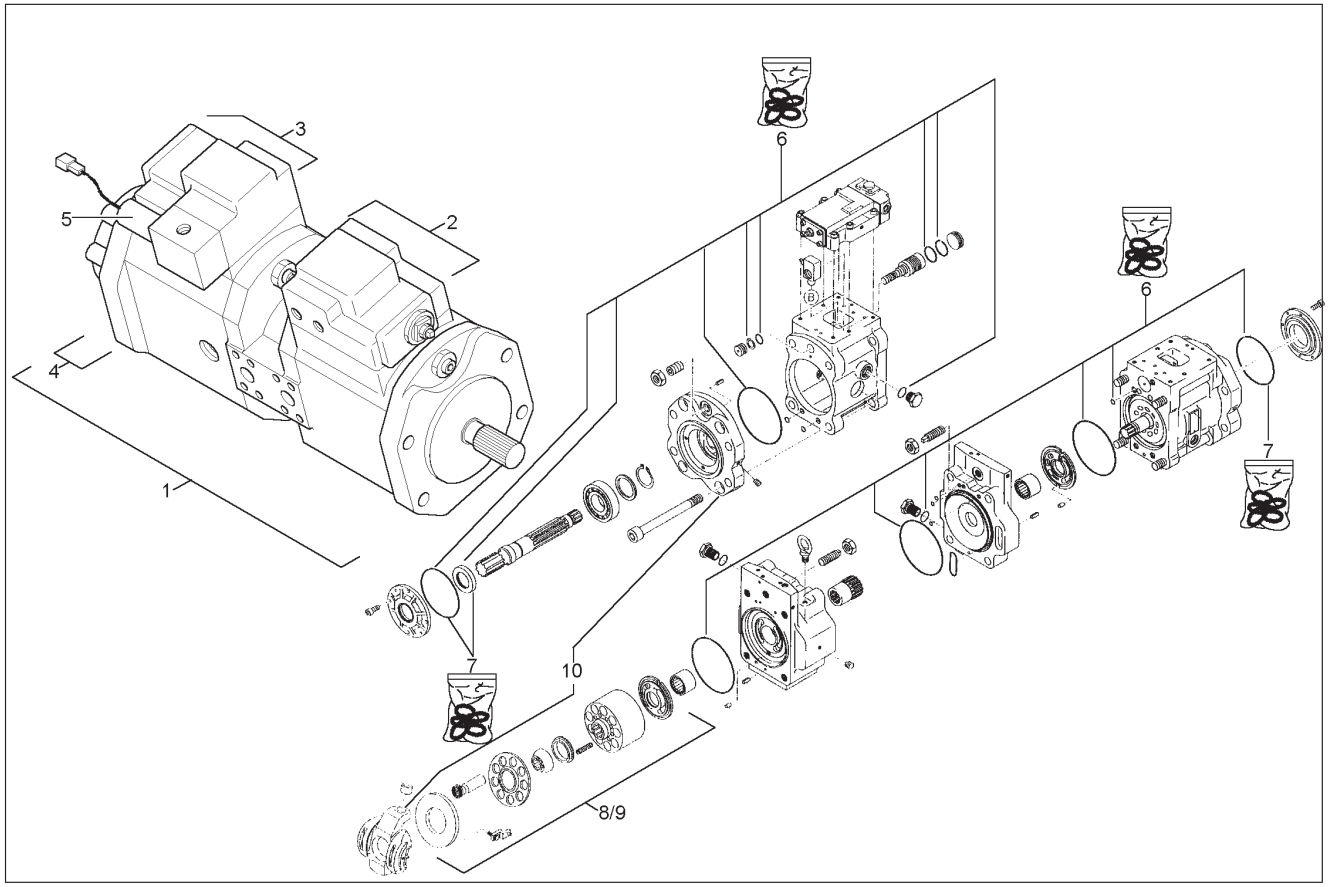

Ref. No.	Part No.	Description	Qty. Req.	Ref. No.	Part No.	Description	Qty. Req.
01	164489	VARIABLE DOUBLE DISPLACEMENT . .	1	06	164528	SEAL KIT VARIABLE DISPLACEMENT .	1
02	164530	CONTROL UNIT	1	07	164529	SEAL KIT (FLANGE–SEAL)	1
03	164531	CONTROL UNIT	1	08	164616	REPAIR LIT PUMP	1
04	164527	GEAR PUMP	1	09	164617	REPAIR KIT PUMP REAR	1
05	164532	POWER REGULATOR	1	10	164618	REPAIR KIT	1

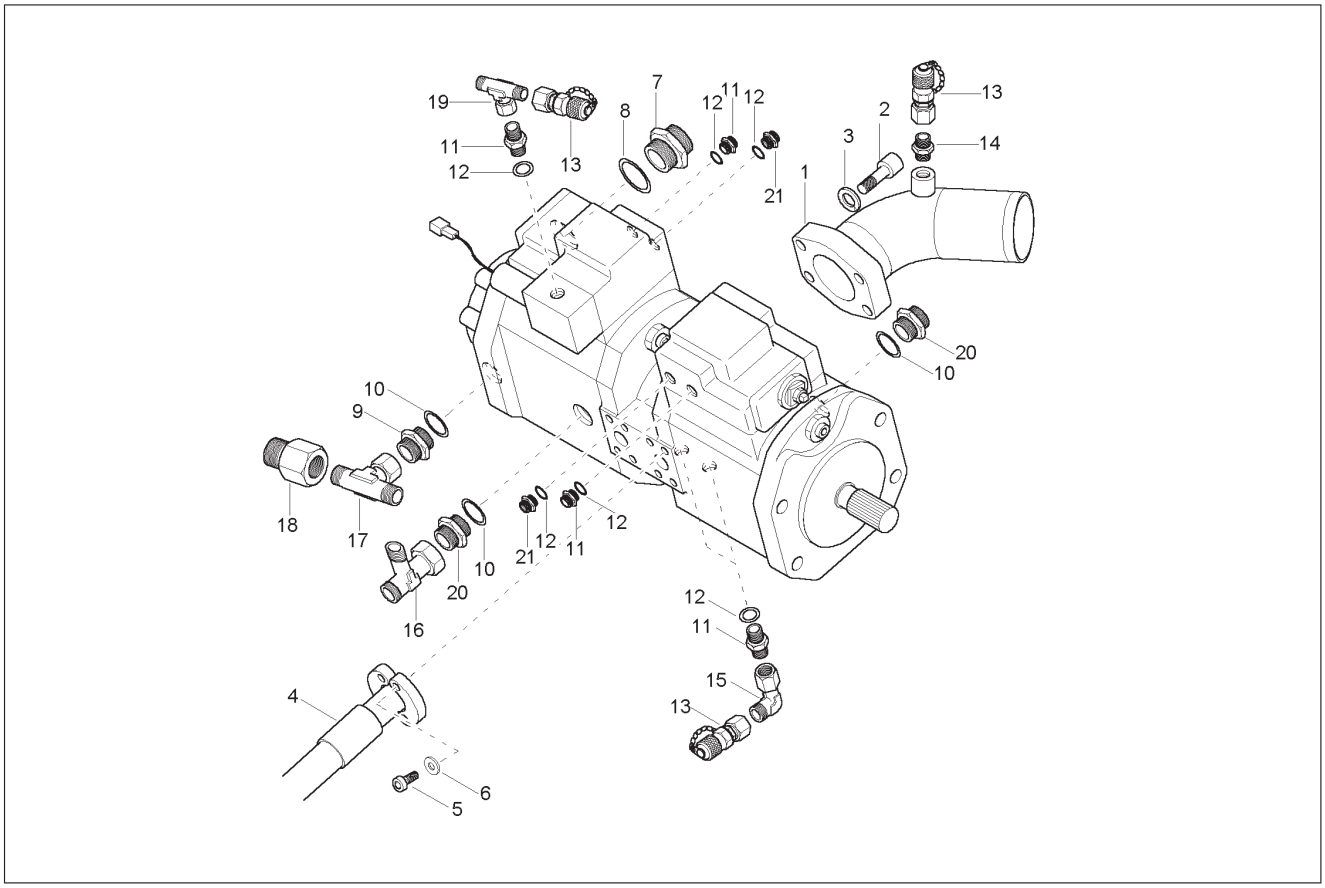

Ref. No.	Part No.	Description	Qty. Req.
01	164471	FLANGE	1
02	656148	SHCS HS 12–1.75X40 10.9	4
03	161624	LW SPRING B12 DIN 7982	4
04	164843	HP HOSE	2
05	651476	SHCS HS M10–1.2 X 35 10.9	8
06	161635	WASHER/NORD–LOCK NL 10 STUCK	8
07	164940	SCREW JOINT	1
08	161586	O–RING	1
09	161507	SCREW JOINT	1
10	161585	O–RING	3
11	161501	SCREW JOINT	7
12	161574	O–RING	7
13	161514	MEASURE JOINT	4
14	161426	SCREW JOINT	1
15	161443	ANGLE	1
16	161467	TEE	1
17	163115	SCREW JOINT	1
18	163116	TEE	1
19	161450	TEE	1
20	161508	SCREW JOINT	2
21	161501	SCREW JOINT	2

GE1202 – TRACK DRIVE

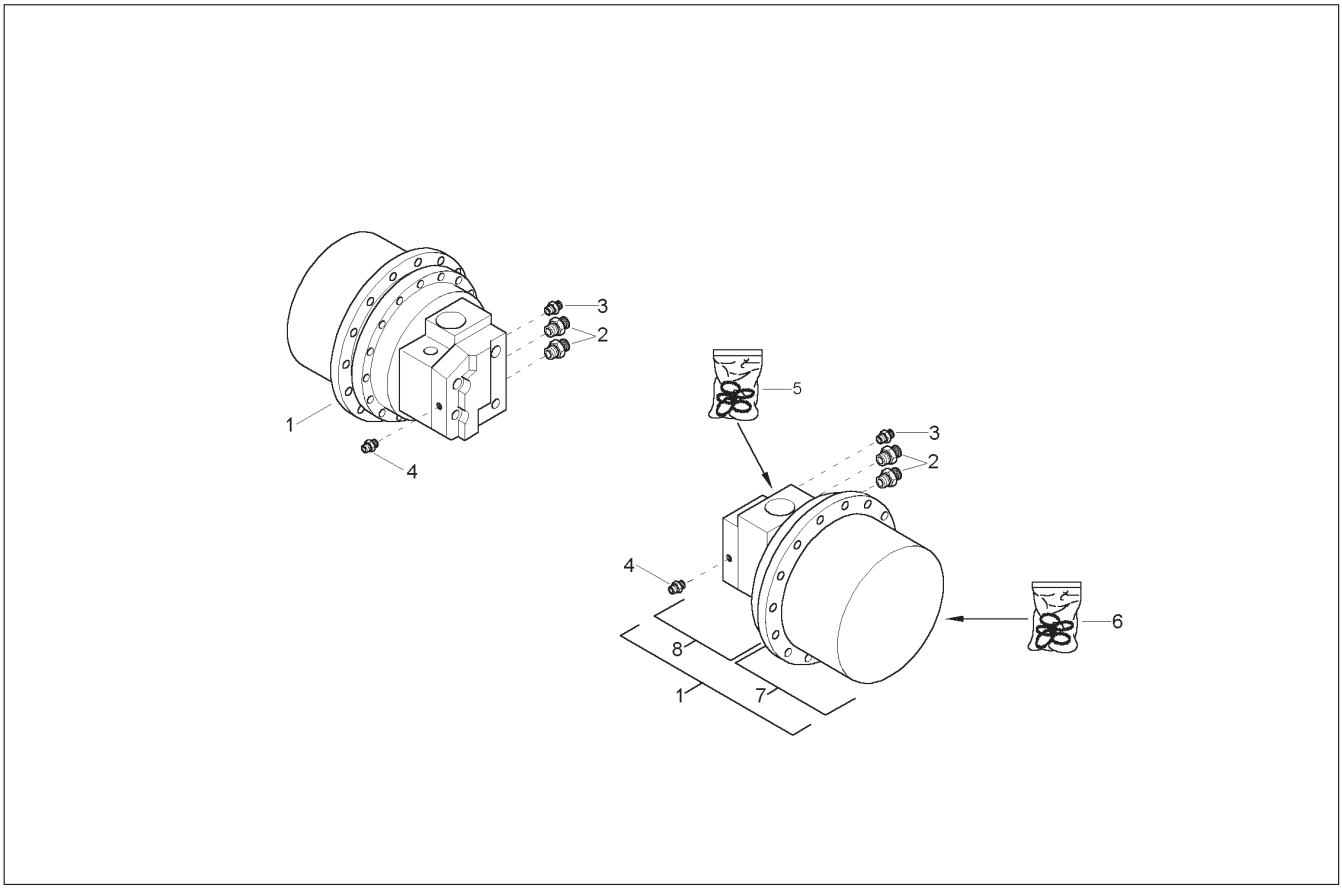

Ref. No.	Part No.	Description	Qty. Req.
01	164190	TRACK DRIVE UNIT	2
02	164951	SCREW JOINT	4
03	164932	SCREW JOINT	2
04	164937	SCREW JOINT	2
05	164196	SEAL KIT – HYDRAULIC MOTOR	2
06	164195	SEAL KIT – TRAVELLING GEAR	2
07	164191	GEARBOX COMPLETE	2
08	164192	MOTOR COMPLETE	2

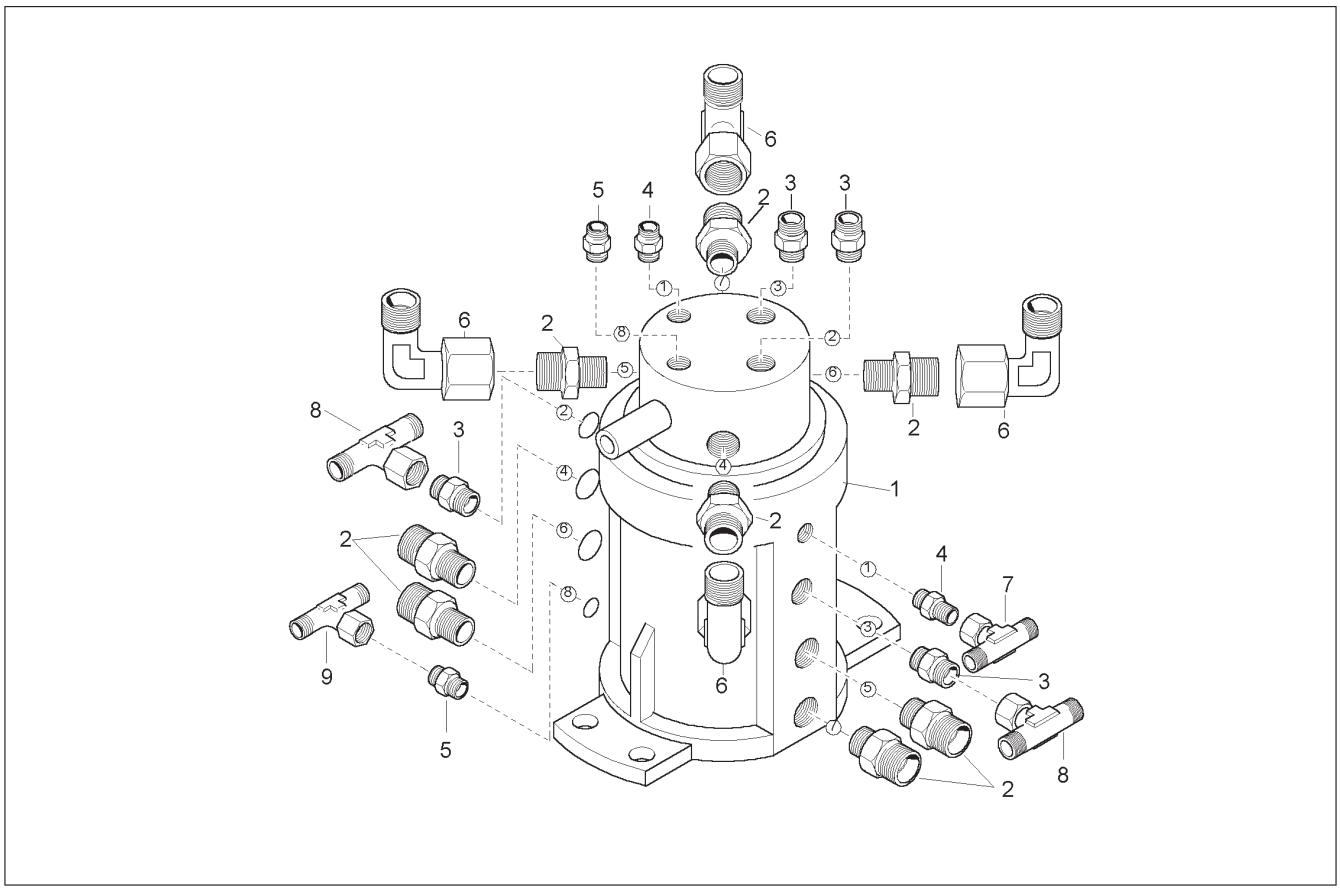

Ref. No.	Part No.	Description	Qty. Req.
01	163068	SECTION	1
02	163358	SCREW JOINT	8
03	163357	ANGLE	4
04	161426	SCREW JOINT	2
05	161459	SCREW JOINT	2
06	163356	TEE	4
07	161450	TEE	1
08	163355	ANGLE	2
09	163115	SCREW JOINT	1

GE1202 – SWIVEL JOINT BREAKDOWN

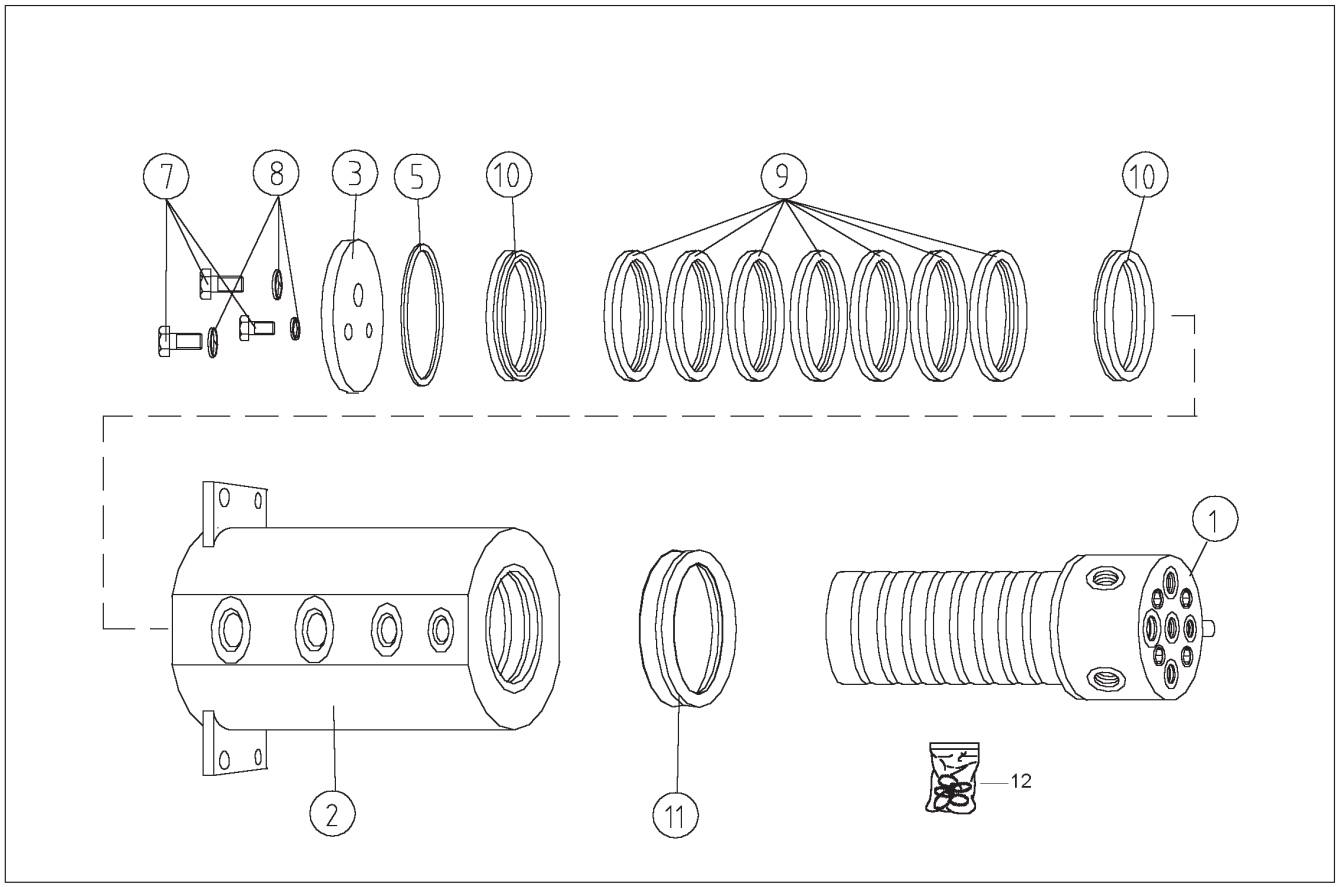

Ref. No.	Part No.	Description	Qty. Req.	Ref. No.	Part No.	Description	Qty. Req.
01	164786	INNER PART – SWIVEL JOINT	1	08	164194	WASHER	4
02	164785	OUTER PART – SWIVEL JOINT	1	09	164780	WASHER	7
03	164784	COVER	1	10	164781	WASHER	2
05	164787	WASHER	1	11	164783	V–SEAL	1
07	164782	SCREW	4	12	161174	GASKETS SWIVEL DRIVER	1

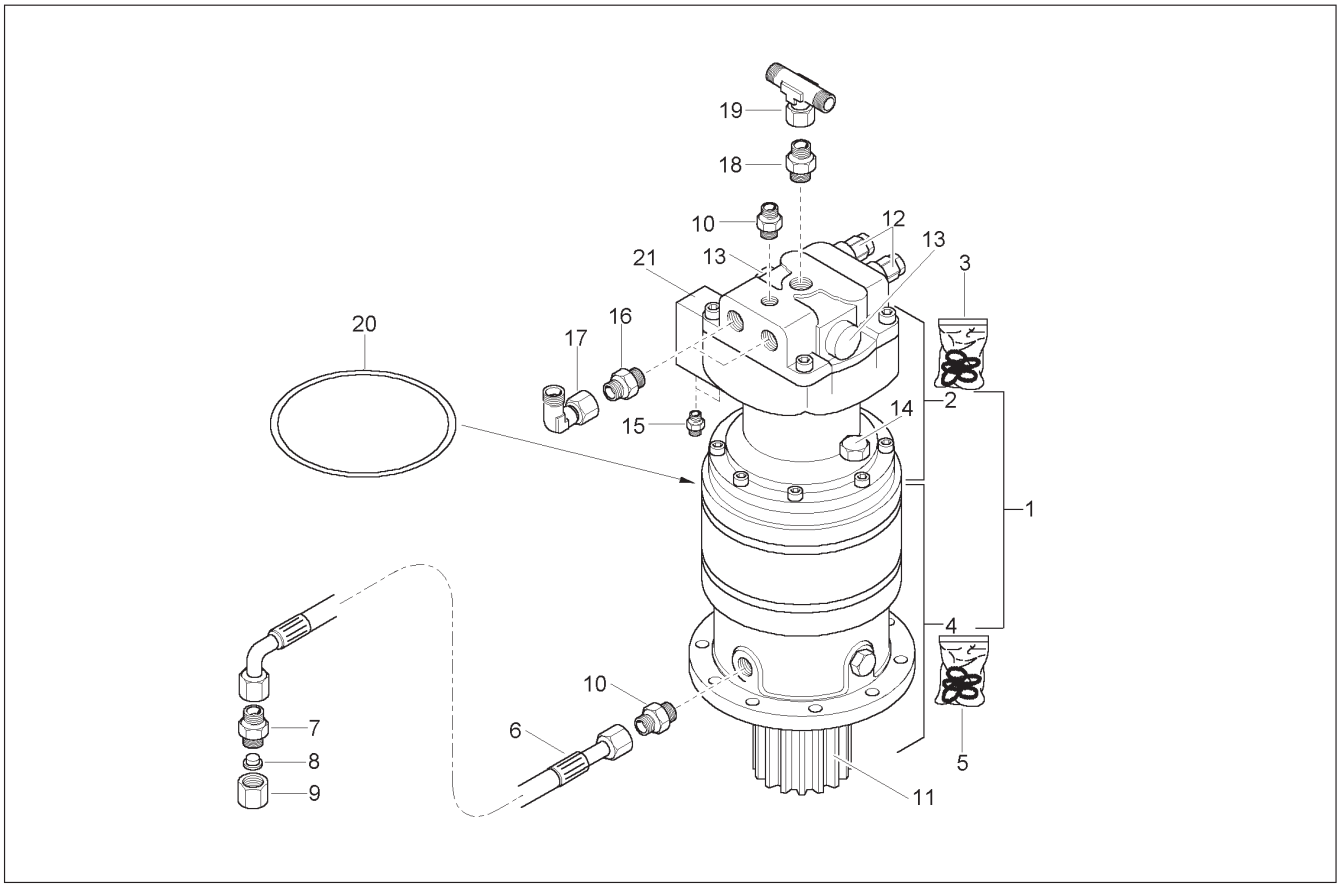

Ref. No.	Part No.	Description	Qty. Req.
01	164499	ROTARY ACTUATOR COMPLETE	1
02	164540	HYDRAULIC MOTOR	1
03	164649	SEAL KIT – HYDRAULIC MOTOR	1
04	164541	TURNING GEAR	1
05	164650	SEAL KIT – TURNING GEAR	1
06	164816	HP HOSE	1
07	161425	SCREW JOINT	1
08	164926	SCREW	1
09	161423	NUT	1
10	161429	SCREW JOINT	2
11	164533	PINION	1
12	164542	SHOCK VALVE	2
13	164543	FEEDING VALVE	2
14	164544	AERATION SCREW	1
15	164945	SCREW JOINT	2
16	164948	SCREW JOINT	2
17	163356	TEE	2
18	164947	SCREW JOINT	1
19	161502	TEE	1
20	164545	O–RING	1
21	164548	VALVE	1

GE1202 – MAIN CONTROL VALVE

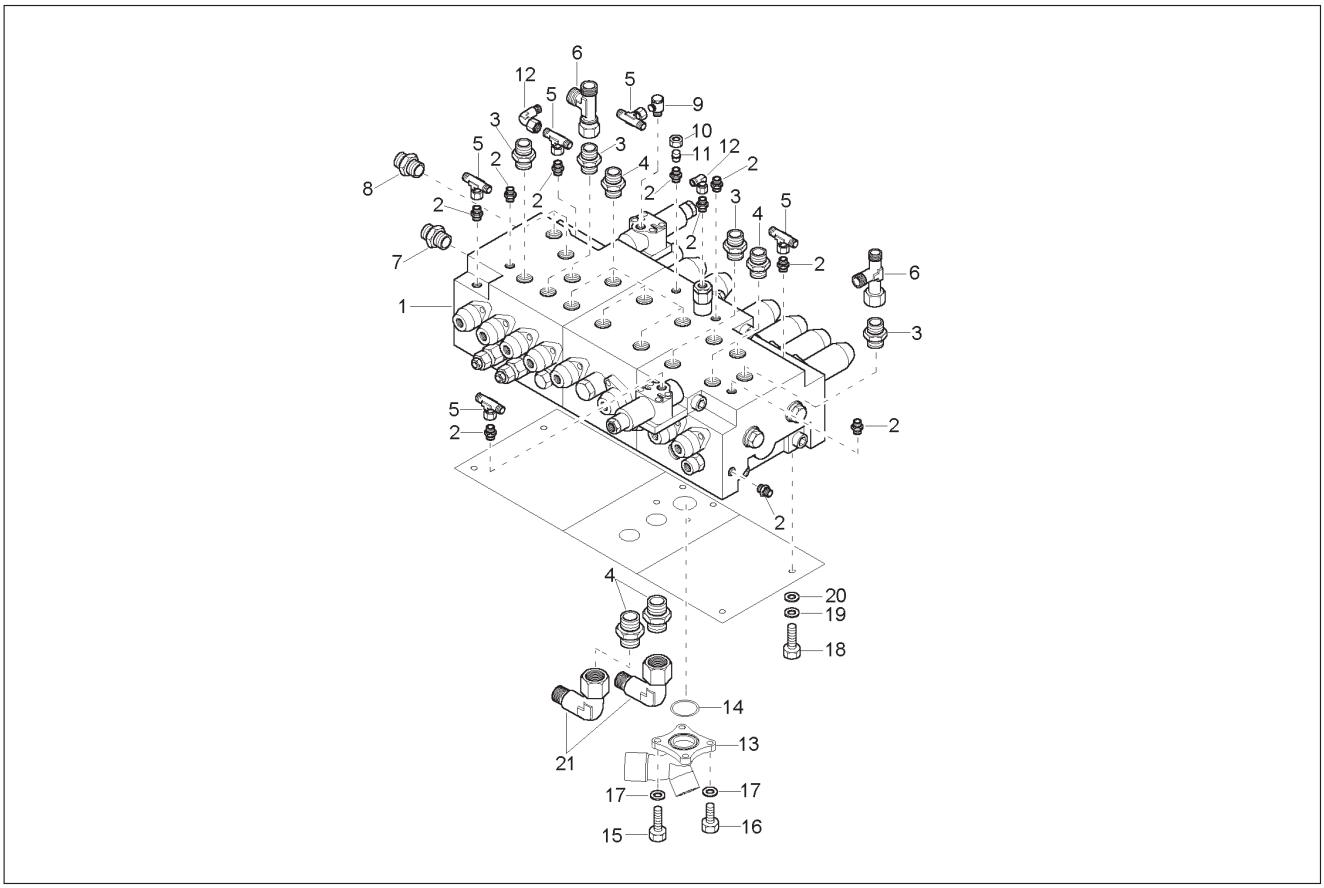

Ref. No.	Part No.	Description	Qty. Req.
01	164490	CONTROL VALVE COMPLETE	1
02	164938	SCREW JOINT	15
03	164936	SCREW JOINT	8
04	164935	SCREW JOINT	10
05	161450	TEE	5
06	164933	ELBOW	3
07	163359	SCREW JOINT	1
08	164935	SCREW JOINT	1
09	164946	SWIVELING SCREW–FITTING	1
10	164929	NUT	1
11	164927	PLUG	1
12	161443	ANGLE	2
13	164481	FLANGE	1
14	163211	COLLAR	1
15	651396	CS M10–1.5 X 30 C 8.8	3
16	651391	CS M10–1.5 X 20 C 8.8	1
17	161669	RING/SNAP S10	4
18	656016	CS M12–1.7 X 30 C 8.8	4
19	161670	RING/SNAP S12	4
20	161642	WASHER/GR A 13 ZO	4
21	164931	ANGLE	2

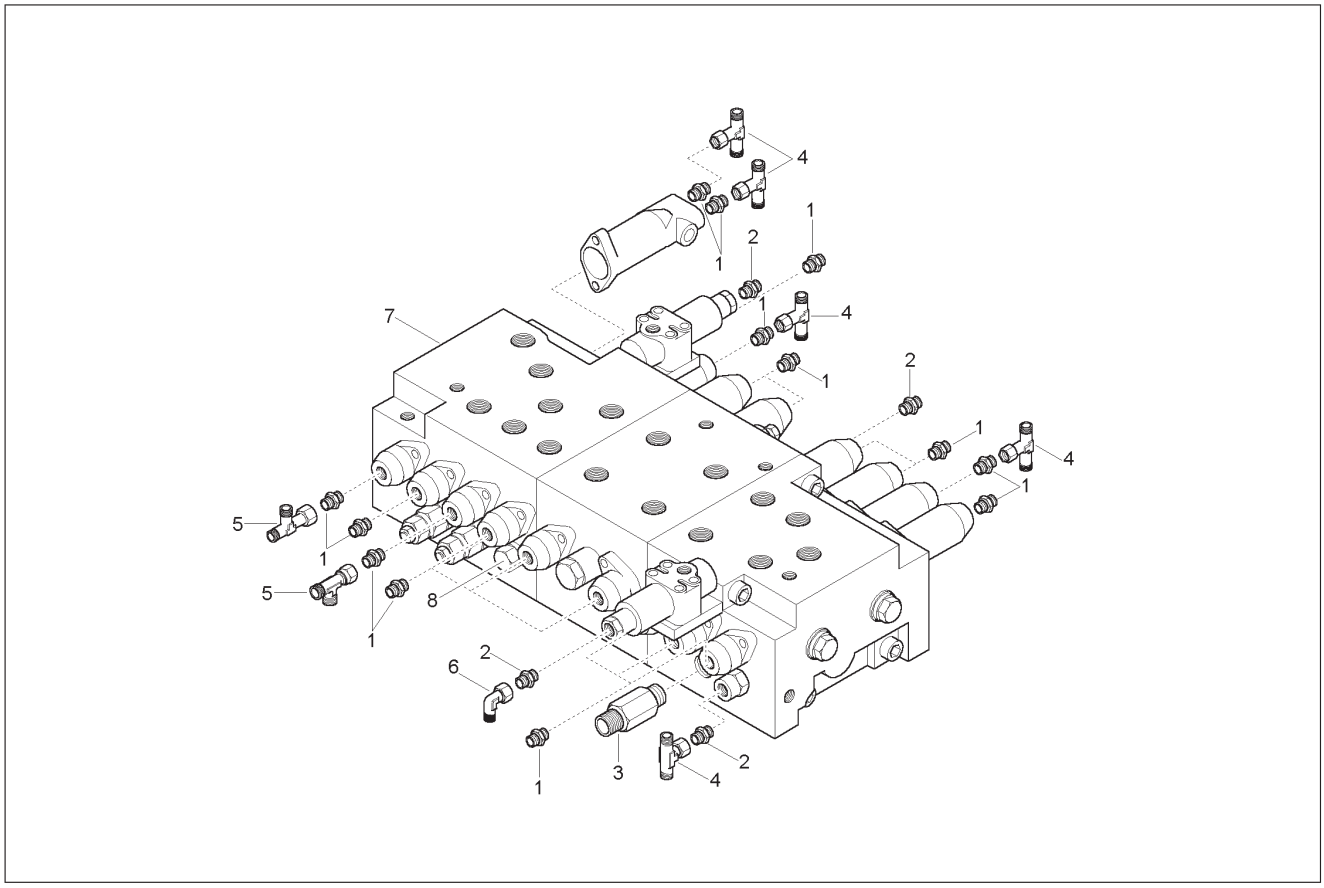

Ref. No.	Part No.	Description	Qty. Req.	Ref. No.	Part No.	Description	Qty. Req.
01	164937	SCREW JOINT	19	05	161448	ELBOW	2
02	164938	SCREW JOINT	4	06	161443	ANGLE	1
03	164502	CONNECTOR	1	07	164490	CONTROL VALVE COMPLETE	1
04	161450	TEE	5	08	164546	PLUG	2

GE1202 – MAIN CONTROL VALVE

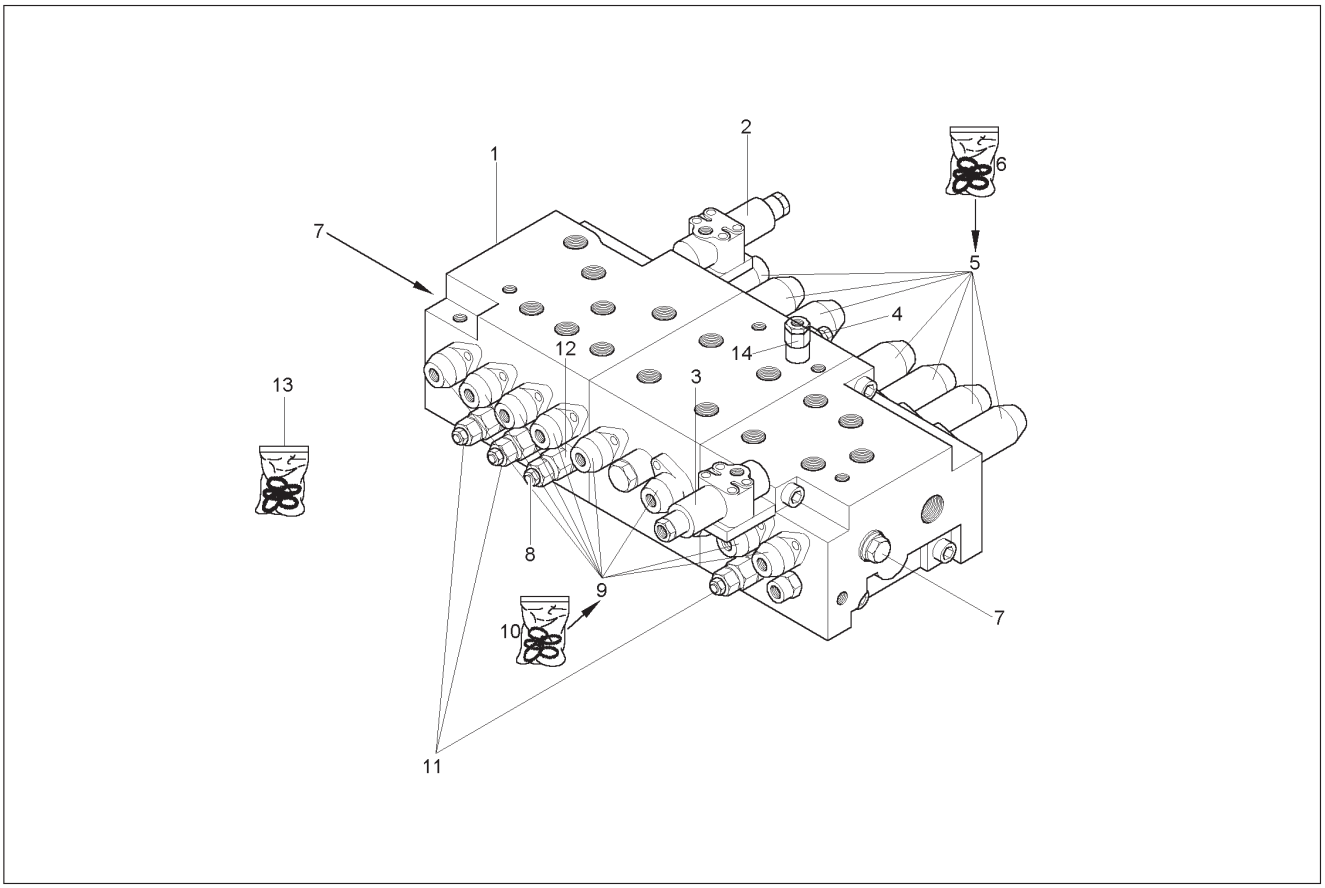

Ref. No.	Part No.	Description	Qty. Req.	Ref. No.	Part No.	Description	Qty. Req.
01	164490	CONTROL VALVE COMPLETE	1	08	164547	PRESSURE LIMITING VALVE KIT	1
02	164518	PRESSURE HOLDING VALVE (BOOM)	1	09	164515	PILOT CONTROL CAP	8
03	164519	PRESSURE HOLDING VALVE (DIPPER)	1	10	164523	SEAL KIT	8
04	164520	MAIN PRESSURE CONTROL	1	11	164517	PRESSURE LIMITING VALVE	3
05	164516	PILOT CONTROL CAP	7	12	164525	PLUG	1
06	164524	SEAL KIT	7	13	164521	SEAL KIT COMPLETE	1
07	164522	NEGATIVE CONTROL CARTRIDGE	2	14	164526	VALVE STRAIGHT–RUNNING	1

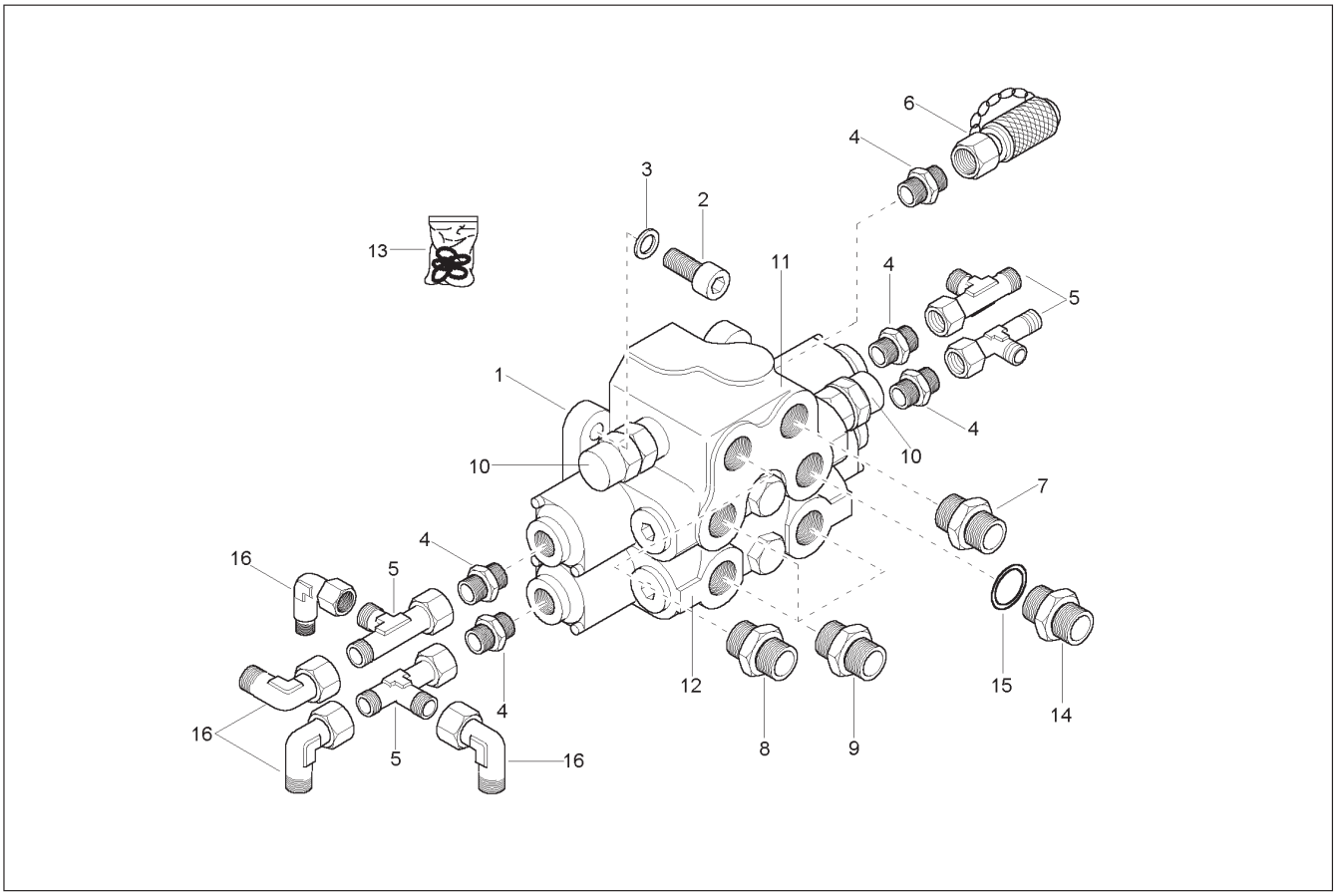

Ref. No.	Part No.	Description	Qty. Req.	Ref. No.	Part No.	Description	Qty. Req.
01	164491	CONTROL VALVE COMPLETE	1	09	163364	SCREW JOINT	3
02	651475	SHCS HS M10–1.2 X 30 8.8	4	10	164864	PRESSURE LIMITING VALVE	2
03	161669	RING/SNAP S10	4	11	164538	SECTION	1
04	161426	SCREW JOINT	5	12	164539	SECTION	1
05	161448	ELBOW	4	13	164788	SEAL KIT	1
06	161514	MEASURE JOINT	1	14	163367	SCREW JOINT	1
07	163360	SCREW JOINT	1	15	161585	O–RING	1
08	162494	PLUG	1	16	161443	ANGLE	4

GE1202 – PILOT SUPPLY UNIT

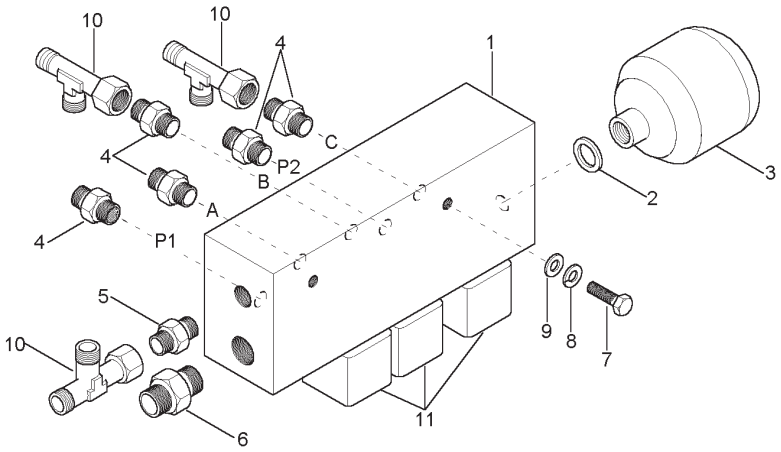

Ref. No.	Part No.	Description	Qty. Req.
01	164500	PILOT OIL SUPPLY UNIT	1
02	161567	SEAL	1
03	160437	ACCUMULATOR	1
04	161426	SCREW JOINT	5
05	161427	SCREW JOINT	1
06	161430	SCREW JOINT	1
07	656105	CS M8–1.2 X 25 C 8.8	2
08	656110	LW M8	2
09	161661	WASHER/GR A 8.4 ZO	2
10	161448	ELBOW	1
11	164537	SOLENOID VALVE	3

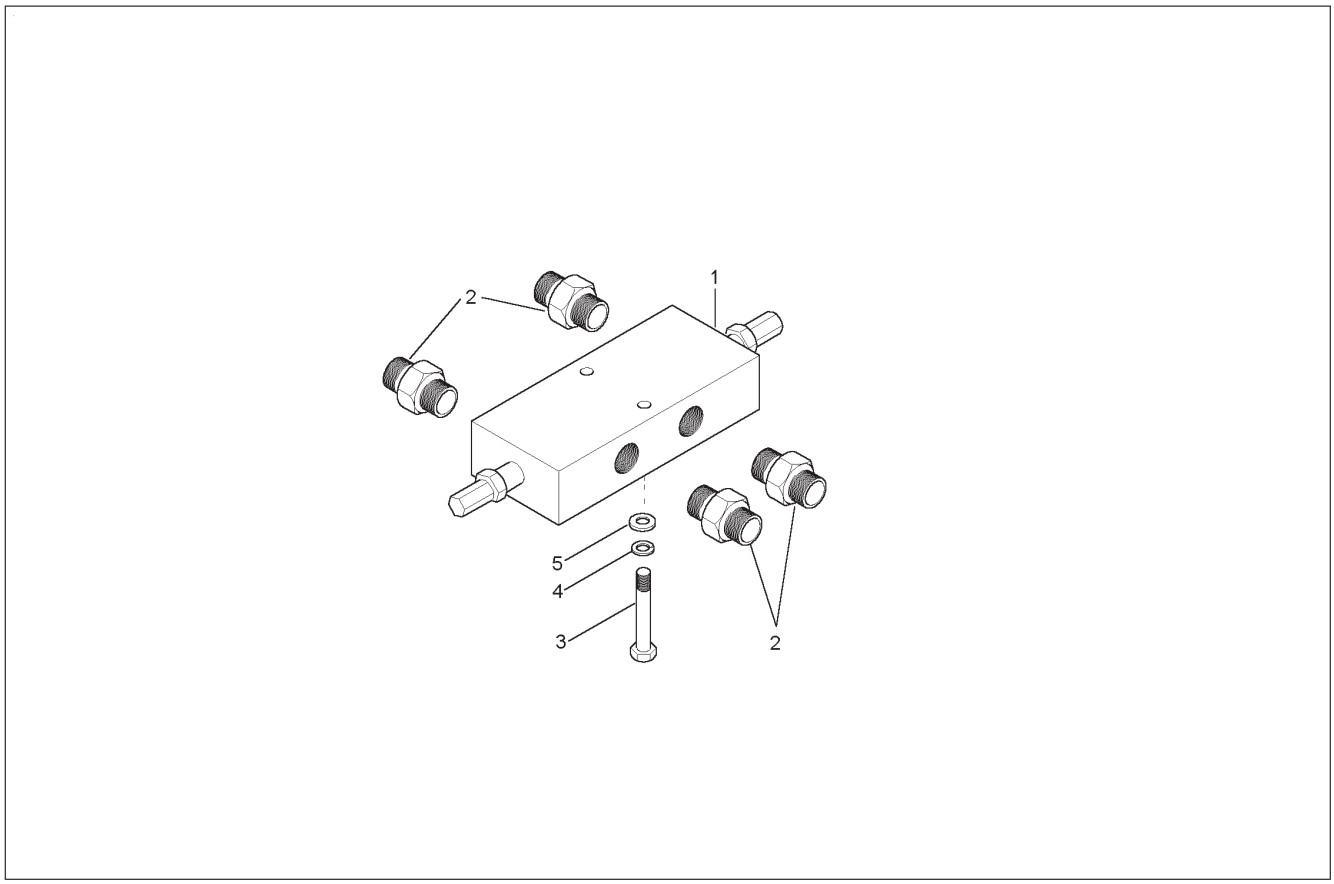

Ref. No.	Part No.	Description	Qty. Req.	Ref. No.	Part No.	Description	Qty. Req.
01	161156	VALVE	1	04	161675	RING/SNAP S6	2
02	163364	SCREW JOINT	4	05	161660	WASHER/GR A 6.4	2
03	656172	CS M6–1.0 X 45 C 8.8	2				

GE1202 – SELECTION VALVE

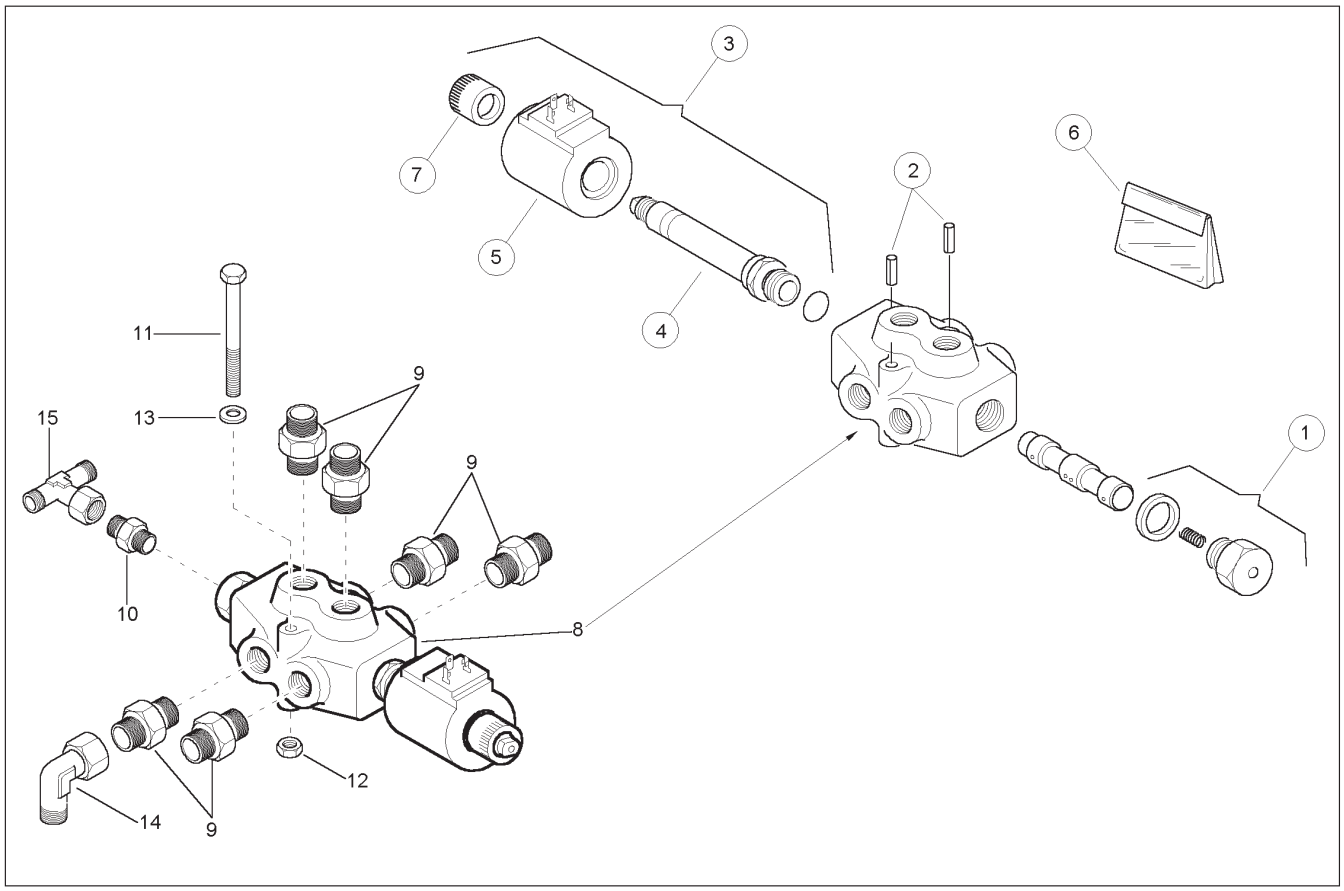

Ref. No.	Part No.	Description	Qty. Req.
01	162241	PISTON	1
02	162242	STOP SOLENOID	2
03	162243	PLUG	1
04	162244	STOP SOLENOID	1
05	162245	PIPE SUPPORT	1
06	162246	MAGNETIC REEL	1
07	164706	NUT	1
08	160763	SELECTION VALVE	1
09	161427	SCREW JOINT	6
10	161426	SCREW JOINT	1
11	164913	SCREW	2
12	651457	HLN INS M6–1.0 8	2
13	161660	WASHER/GR A 6.4	2
14	161443	ANGLE	1
15	161450	TEE	1

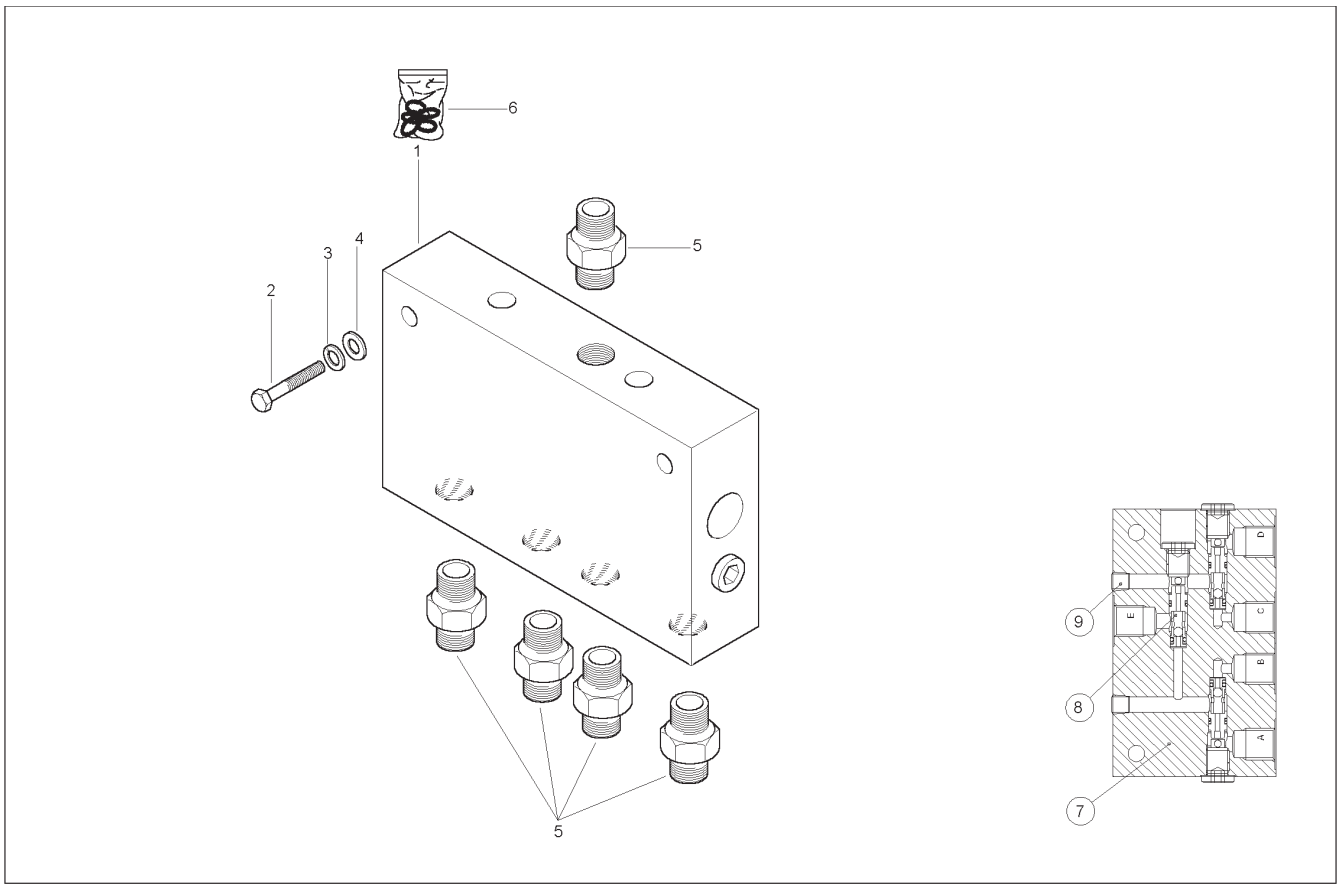

Ref. No.	Part No.	Description	Qty. Req.
01	160764	CONTROL VALVE	1
02	651427	HB M6–1.0 X 35 C 8.8	2
03	161675	RING/SNAP S6	2
04	161660	WASHER/GR A 6.4 ZO DIN125	2
05	161426	SCREW JOINT	5
06	162247	SEAL KIT	1
07	162239	HYDRAULIC PUMP	1
08	162240	HOUSING	3
09	162248	SEAL KIT	2

GE1202 – DISTRIBUTION BLOCK

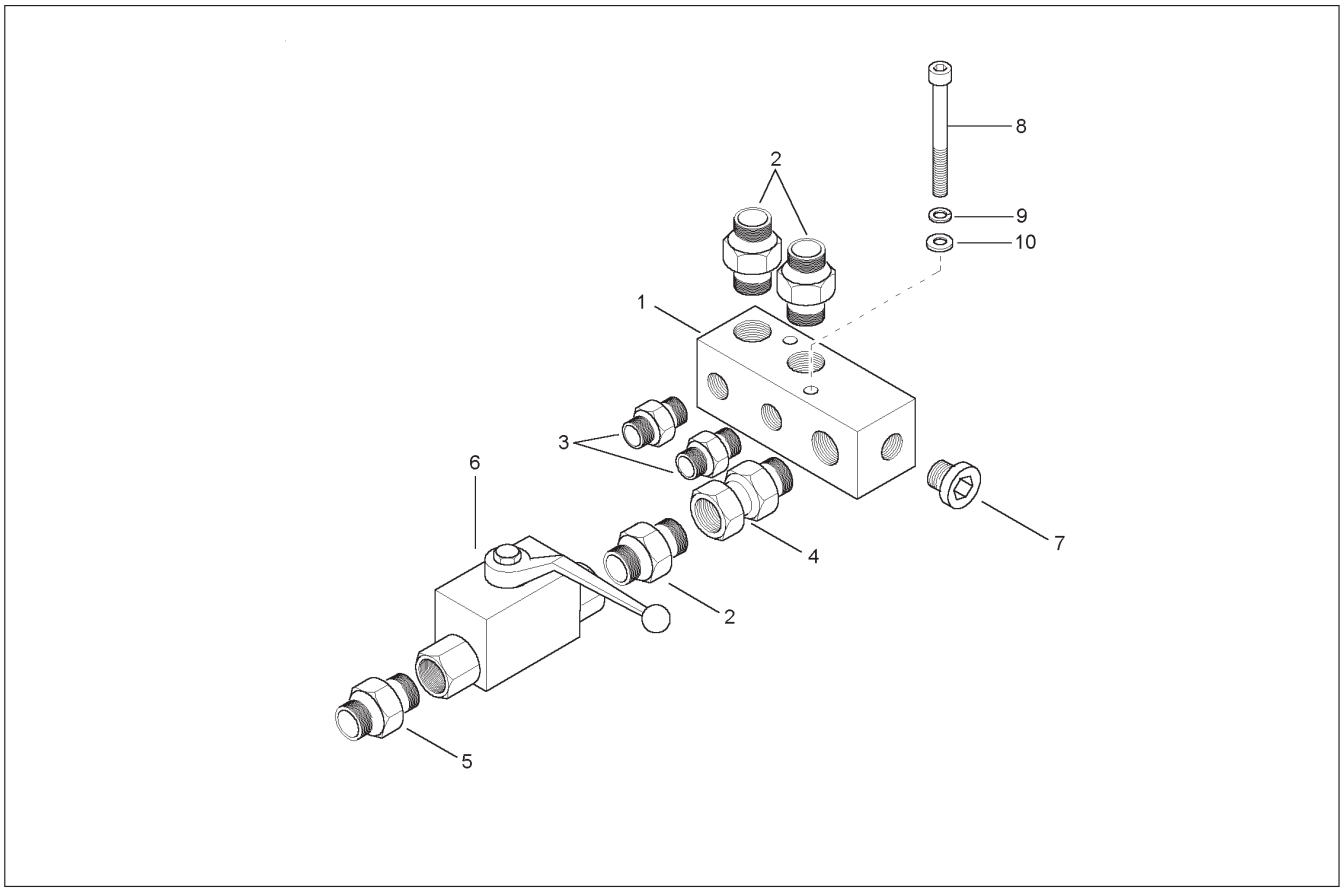

Ref. No.	Part No.	Description	Qty. Req.	Ref. No.	Part No.	Description	Qty. Req.
01	163098	TUBE	1	06	161155	BALL VALVE	1
02	163366	SCREW JOINT	3	07	163351	PLUG	1
03	163359	SCREW JOINT	2	08	162122	STICKER	2
04	163365	SCREW JOINT	1	09	161670	RING/SNAP S12	2
05	161433	SCREW JOINT	1	10	161624	LW SPRING B12 DIN 7982	2

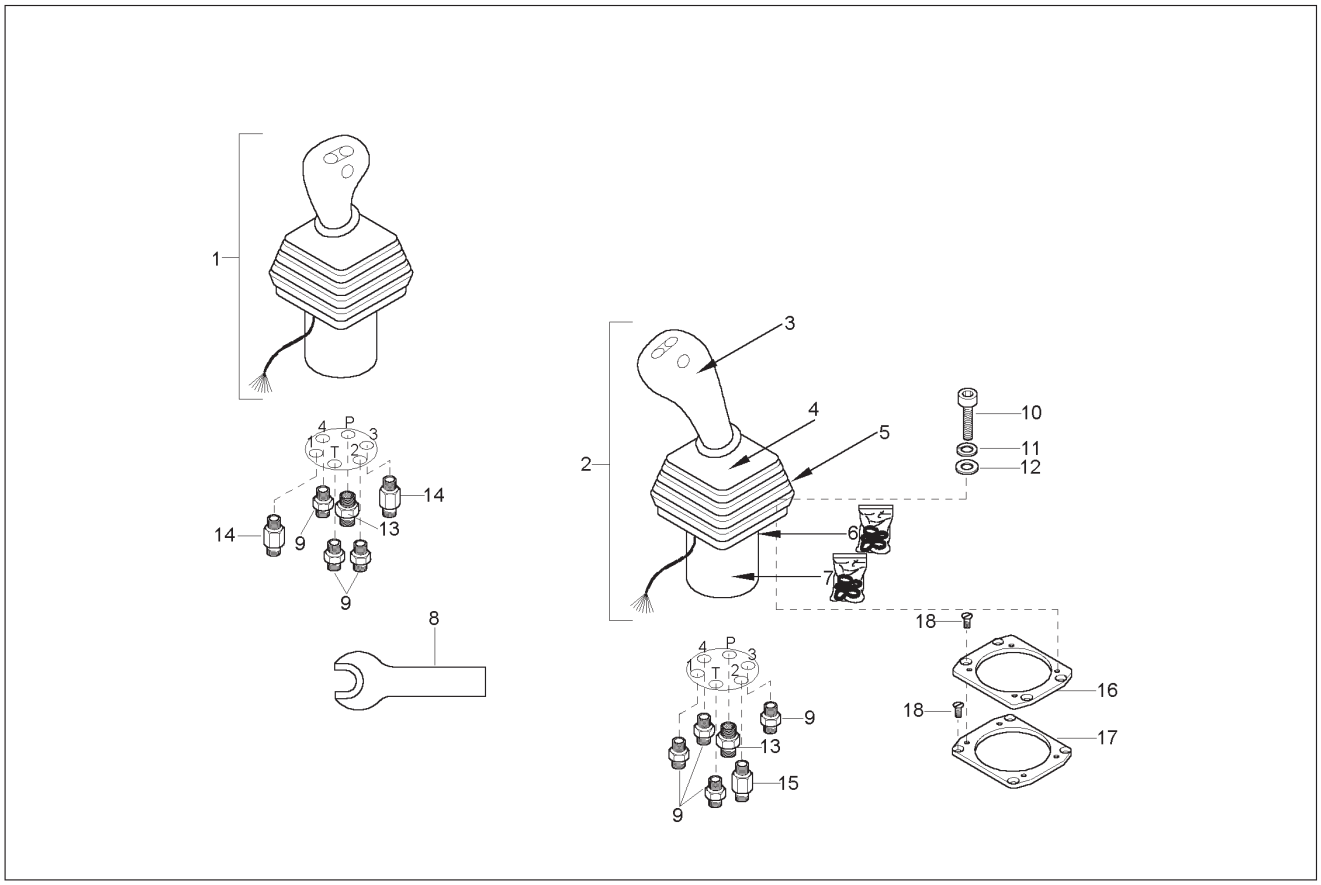

Ref. No.	Part No.	Description	Qty. Req.	Ref. No.	Part No.	Description	Qty. Req.
01	164492	CONTROL LEVER LEFT COMPLETE	1	10	651507	SHCS HS M6–1 X 20 8.8	8
02	164493	CONTROL LEVER RIGHT COMPLETE	1	11	161675	RING/SNAP S6	8
03	164505	HANDLE	2	12	161660	WASHER/GR A 6.4	8
04	164503	UNIVERSAL JOINT	2	13	164535	PILOT CONTROL FILTER	2
05	164506	BELLOWS	2	14	164954	CHECK VALVE	2
06	164508	SEAL KIT JOYSTICK COMPLETE	2	15	164955	CHECK VALVE	1
07	164507	PLUNGER + SEAL KIT COMPLETE	2	16	164249	BRACKET	2
08	164504	TOOL FOR UNIVERSAL JOINT	1	17	164248	BRACKET	2
09	164945	SCREW JOINT	7	18	651461	SCREW FCHC HS M6–1.0 X 12 8.8	16

GE1202 – TRAVEL VALVE

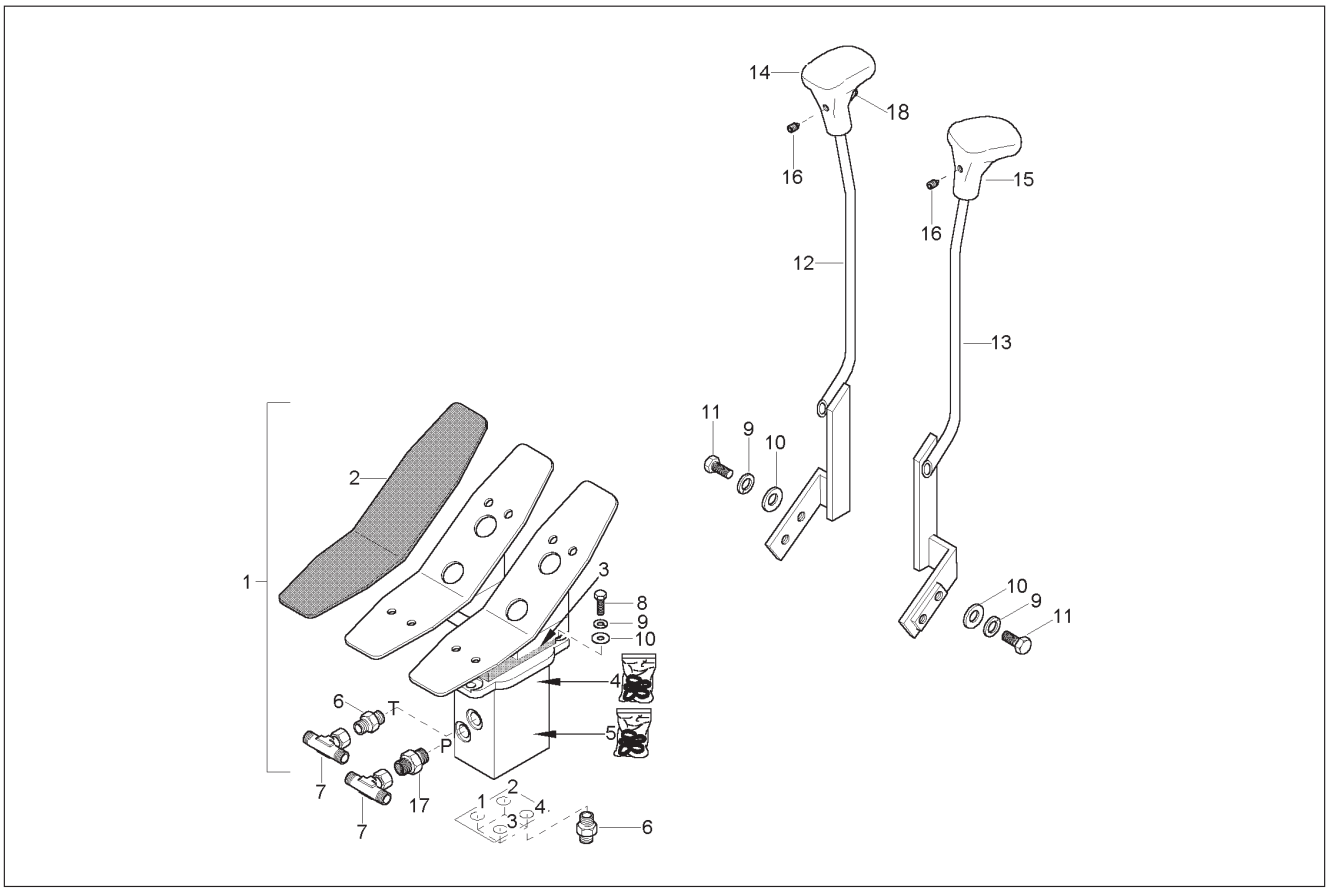

Ref. No.	Part No.	Description	Qty. Req.
01	164494	CONTROL LEVER COMPLETE	1
02	164509	RUBBER	2
03	164510	BELLOWS	1
04	164513	SEAL KIT SINGLE VALVE COMPLETE	1
05	164514	PLUNGER + SEAL KIT COMPLETE	1
06	164945	SCREW JOINT	6
07	161450	TEE	2
08	651391	CS M10–1.5 X 20 C 8.8	2
09	161669	RING/SNAP S10	6
10	161640	WASHER/GR A 10.5 ZO	6
11	651393	CS M10–1.5 X 25 C 8.8	4
12	164660	HAND LEVER TRAVELLING LEFT	1
13	164659	HAND LEVER TRAVELLING RIGHT	1
14	160658	KNOB WITH RED SWITCH	1
15	161764	KNOB	1
16	162027	SCREW	2
17	164535	PILOT CONTROL FILTER	1
18	161363	SWITCH	1

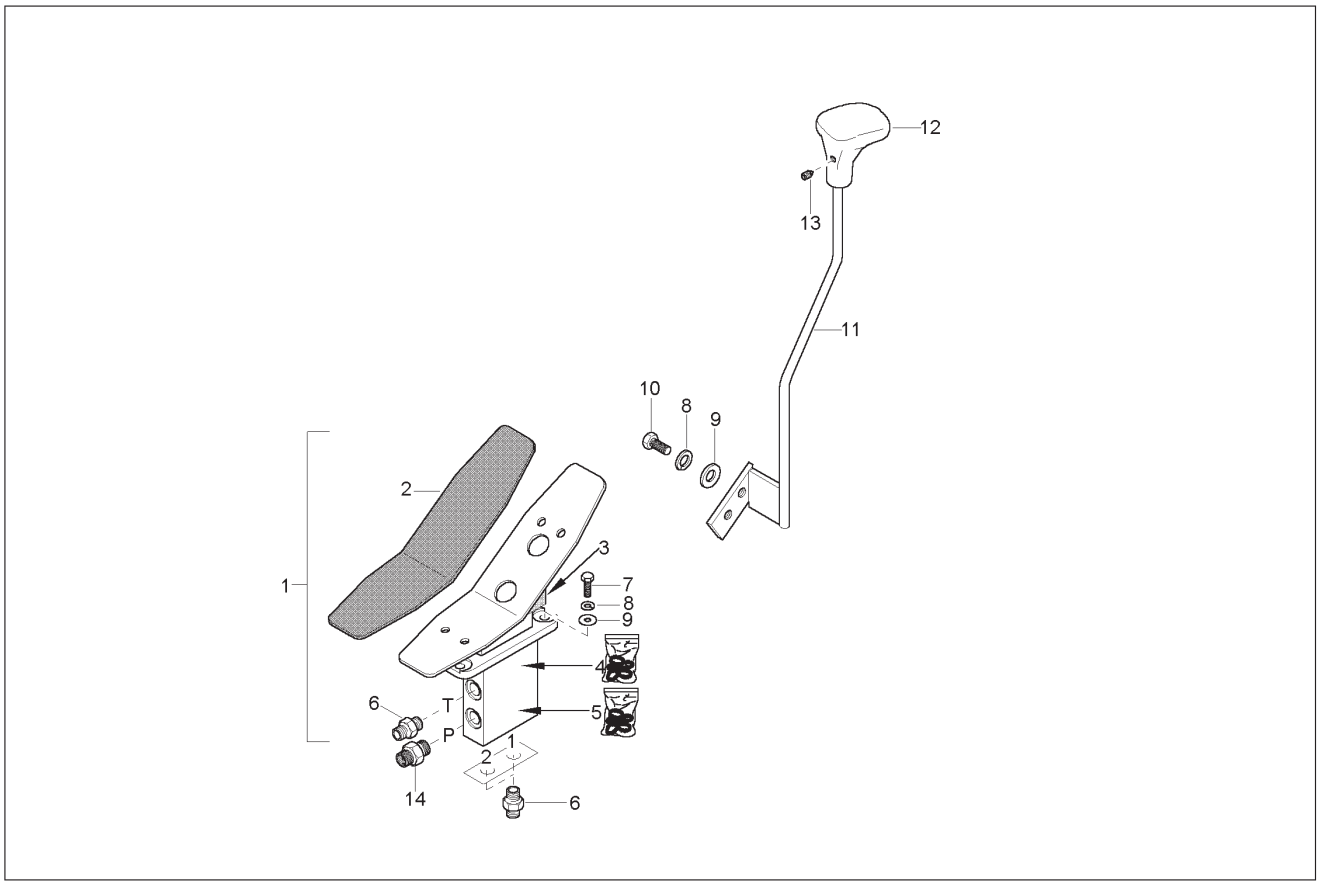

Ref. No.	Part No.	Description	Qty. Req.	Ref. No.	Part No.	Description	Qty. Req.
01	164497	CONTROL LEVER COMPLETE	1	08	161669	RING/SNAP S10	4
02	164509	RUBBER	1	09	161640	WASHER/GR A 10.5 ZO	4
03	164510	BELLOWS	1	10	651393	CS M10–1.5 X 25 C 8.8	2
04	164511	SEAL KIT SINGLE VALVE COMPLETE	1	11	164661	HAND LEVER	1
05	164512	PLUNGER + SEAL KIT COMPLETE	1	12	161764	KNOB	1
06	164945	SCREW JOINT	3	13	162027	SCREW	1
07	651391	CS M10–1.5 X 20 C 8.8	2	14	164535	PILOT CONTROL FILTER	1

GE1202 – AUXILIARY HYDRAULICS VALVE

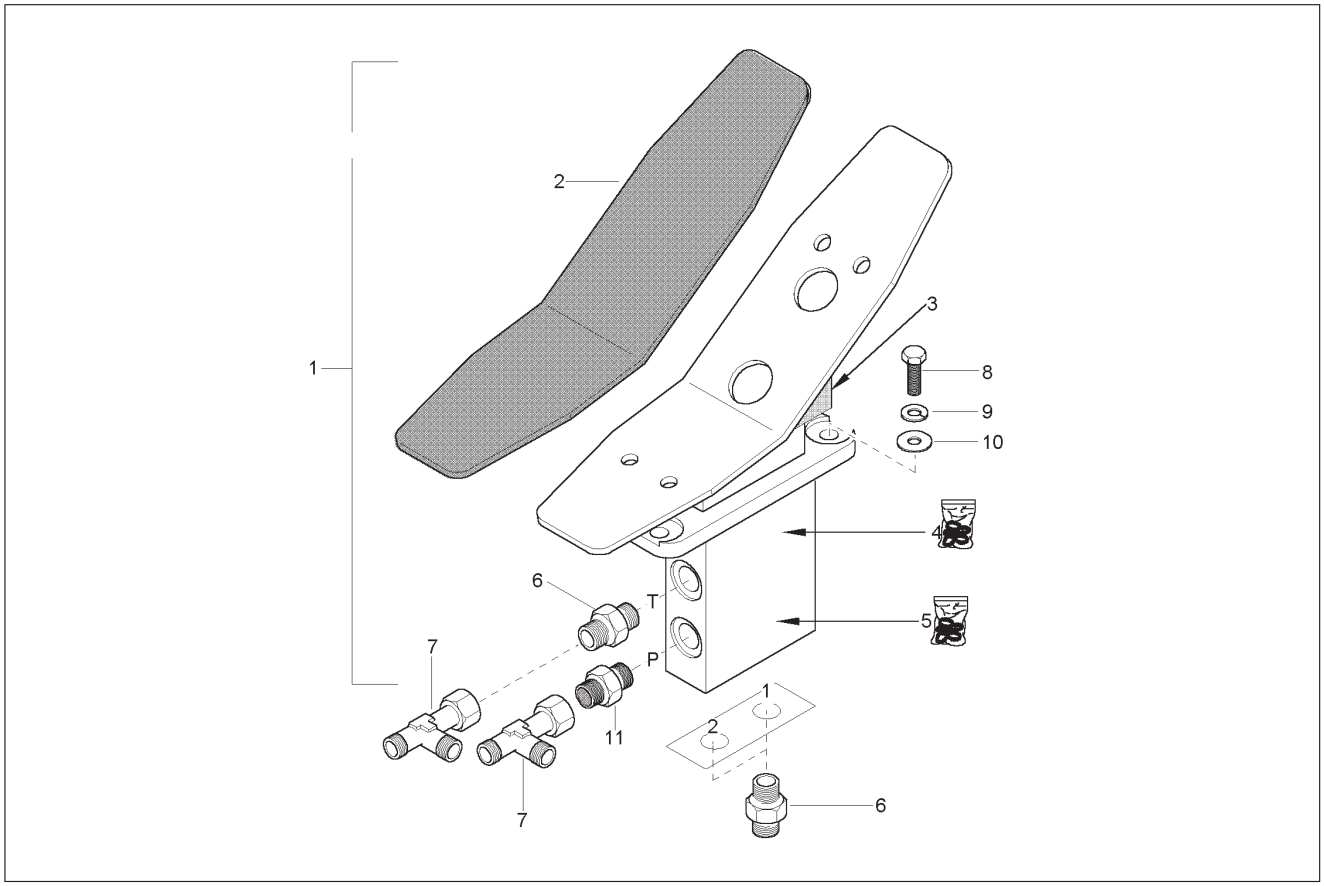

Ref. No.	Part No.	Description	Qty. Req.
01	164497	CONTROL LEVER COMPLETE	1
02	164509	RUBBER	1
03	164510	BELLOWS	1
04	164511	SEAL KIT SINGLE VALVE COMPLETE	1
05	164512	PLUNGER + SEAL KIT COMPLETE	1
06	164945	SCREW JOINT	3
07	161448	ELBOW	2
08	651391	CS M10–1.5 X 20 C 8.8	2
09	161669	RING/SNAP S10	2
10	161640	WASHER/GR A 10.5 ZO	2
11	164535	PILOT CONTROL FILTER	1

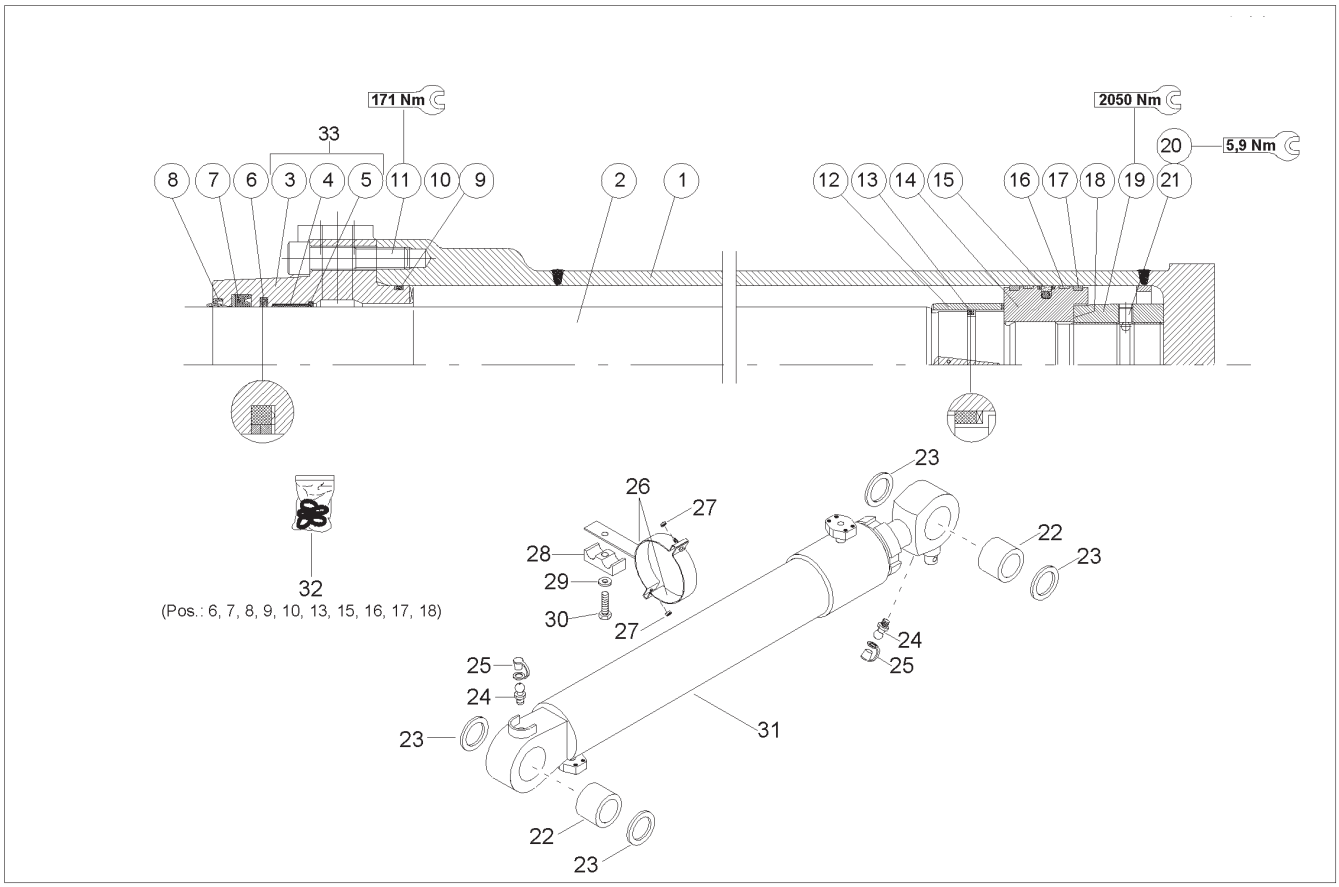

Ref. No.	Part No.	Description	Qty. Req.
1	164549	REPAIR KIT CYLINDER HOUSING	1
2	164550	REPAIR KIT PISTON ROD	1
3	164612	CYLINDER HEAD	1
4	164560	BUSHING	1
5	164561	WASHER	1
6	164562	SEAL	1
7	164563	SEAL	1
8	164566	SEAL	1
9	164567	O–RING	1
10	164568	WASHER	1
11	164569	SCREW	12
12	164570	BUSHING	1
13	164571	RING	1
14	164572	PISTON	1
15	164573	SEAL	1
16	164574	BACKUP RING	2
17	164575	BACKUP RING	2
18	164576	WASHER	1
19	164577	NUT	1
20	164578	SCREW	1
21	164579	BALL	1
22	164564	BUSHING	2
23	164565	PIN SEAL	4
24	161412	LUBRICATION NIPPLE	2
25	161422	PROTECTION CAP	2
26	164477	COLLAR COMPLETE	1
27	651448	HLN INS M10–1.5	2
28	163063	TUBE	1
29	161642	WASHER/GR A 13 ZO	1
30	656017	CS M12–1.7 X 35 C 8.8	1
31	164463	BOOM CYLINDER COMPLETE	2
32	164653	SEAL KIT	1
33	164551	REPAIR KIT CYLINDER HEAD	1

GE1202 – DIPPER CYLINDER

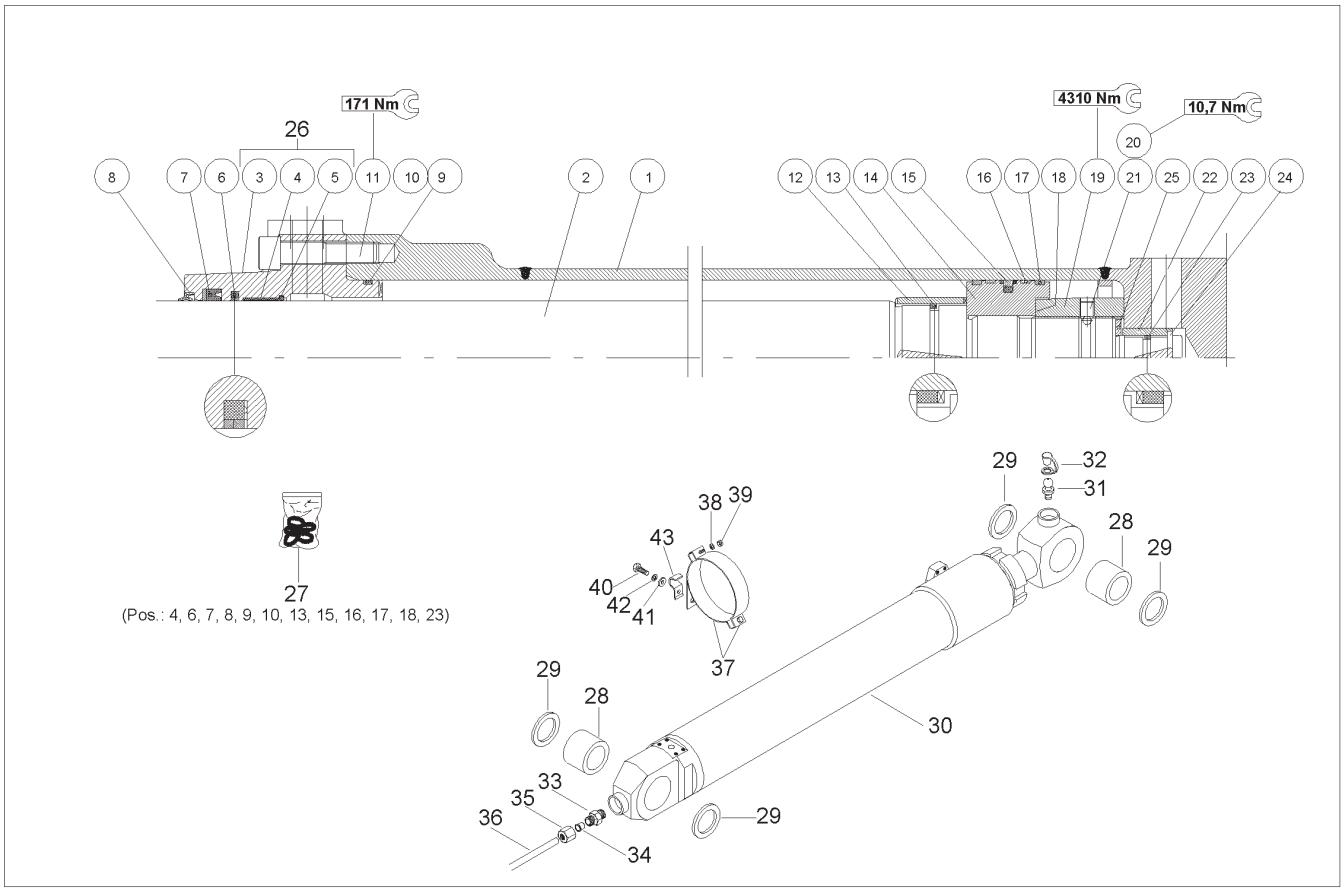

Ref. No.	Part No.	Description	Qty. Req.
01	164552	REPAIR KIT CYLINDER HOUSING	1
02	164553	REPAIR KIT PISTON ROD	1
03	164613	CYLINDER HEAD	1
04	164580	BUSHING	1
05	164581	RING	1
06	164582	SEAL	1
07	164583	SEAL	1
08	164584	SEAL	1
09	164585	O–RING	1
10	164586	WASHER	1
11	164569	SCREW	12
12	164587	BUSHING	1
13	164588	RING	1
14	164589	PISTON	1
15	164590	SEAL	1
16	164591	BACKUP RING	2
17	164592	BACKUP RING	2
18	164593	WASHER	1
19	164594	NUT	1
20	164595	SCREW	1
21	164596	BALL	1
22	164597	BUSHING	1
23	164598	RING	1
24	164599	STOPPER	2
25	164600	WASHER	1
26	164554	REPAIR KIT CYLINDER HEAD	1
27	164654	SEAL KIT	1
28	164564	BUSHING	2
29	164565	PIN SEAL	4
30	164462	DIPPER ARM CYLINDER COMPLETE	1
31	161412	LUBRICATION NIPPLE	1
32	161422	PROTECTION CAP	1
33	161453	SCREW JOINT	1
34	161469	WASHER	2
35	161468	NUT	2
36	161392	LUBRICATION TUBE	2
37	164479	COLLAR COMPLETE	1
38	161640	WASHER/GR A 10.5 ZO	2
39	651448	HLN INS M10–1.5	2
40	656017	CS M12–1.7 X 35 C 8.8	1
41	161642	WASHER/GR A 13 ZO	1
42	161670	RING/SNAP S12	1
43	163377	COLLAR	1

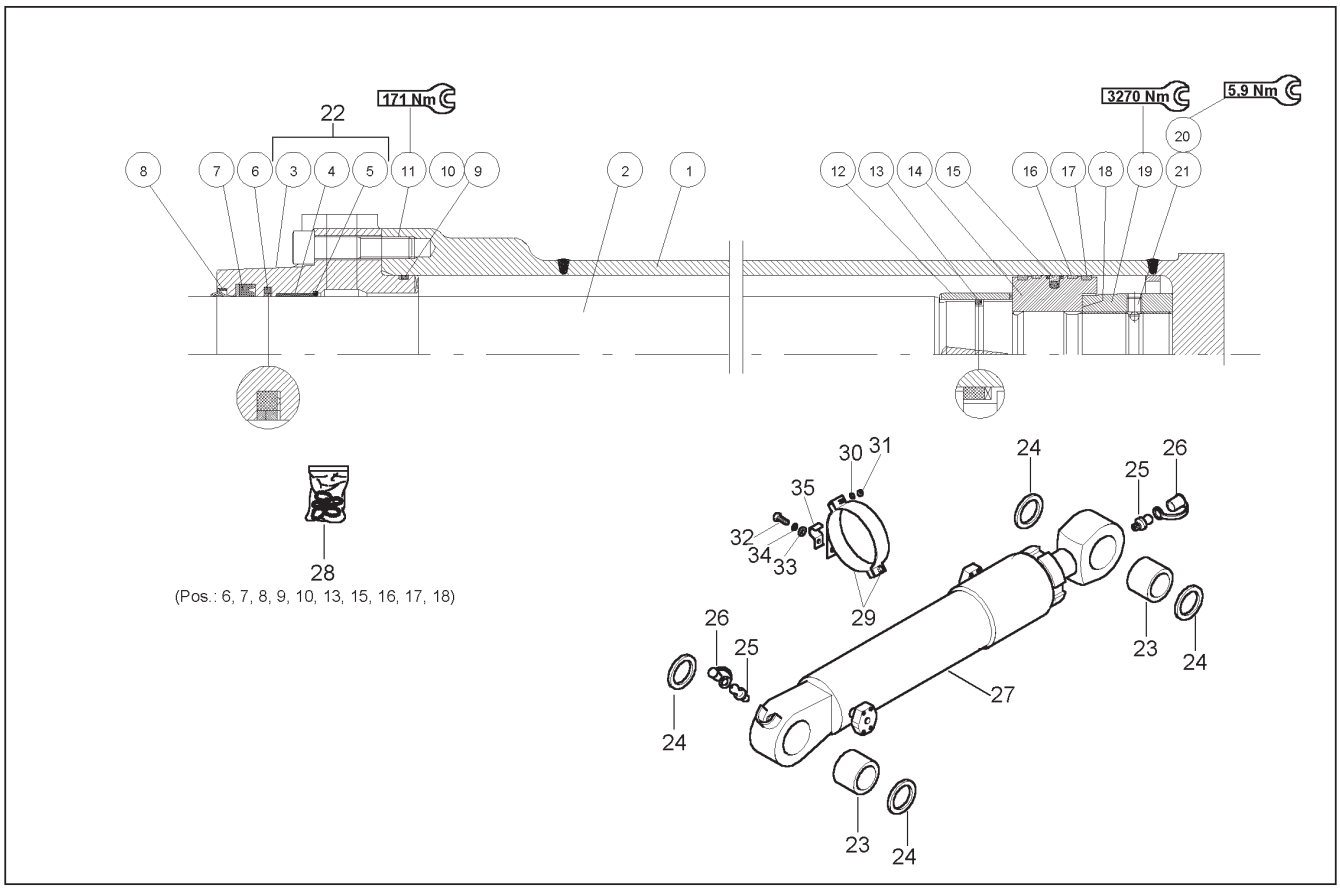

Ref. No.	Part No.	Description	Qty. Req.
01	164555	REPAIR KIT CYLINDER HOUSING	1
02	164556	REPAIR KIT PISTON ROD	1
03	164612	CYLINDER HEAD	1
04	164560	BUSHING	1
05	164561	WASHER	1
06	164562	SEAL	1
07	164563	SEAL	1
08	164566	SEAL	1
09	164567	O–RING	1
10	164568	WASHER	1
11	164569	SCREW	12
12	164603	BUSHING	1
13	164571	RING	1
14	164572	PISTON	1
15	164573	SEAL	1
16	164574	BACKUP RING	2
17	164575	BACKUP RING	2
18	164576	WASHER	1
19	164577	NUT	1
20	164578	SCREW	1
21	164579	BALL	1
22	164557	REPAIR KIT CYLINDER HEAD	1
23	164601	BUSHING	2
24	164602	PIN SEAL	4
25	161412	LUBRICATION NIPPLE	2
26	161422	PROTECTION CAP	2
27	164461	BUCKET CYLINDER COMPLETE	1
28	164653	SEAL KIT	1
29	164478	COLLAR COMPLETE	1
30	161640	WASHER/GR A 10.5 ZO	1
31	651448	HLN INS M10–1.5	1
32	656017	CS M12–1.7 X 35 C 8.8	1
33	161642	WASHER/GR A 13 ZO	1
34	161670	RING/SNAP S12	1
35	163377	COLLAR	1

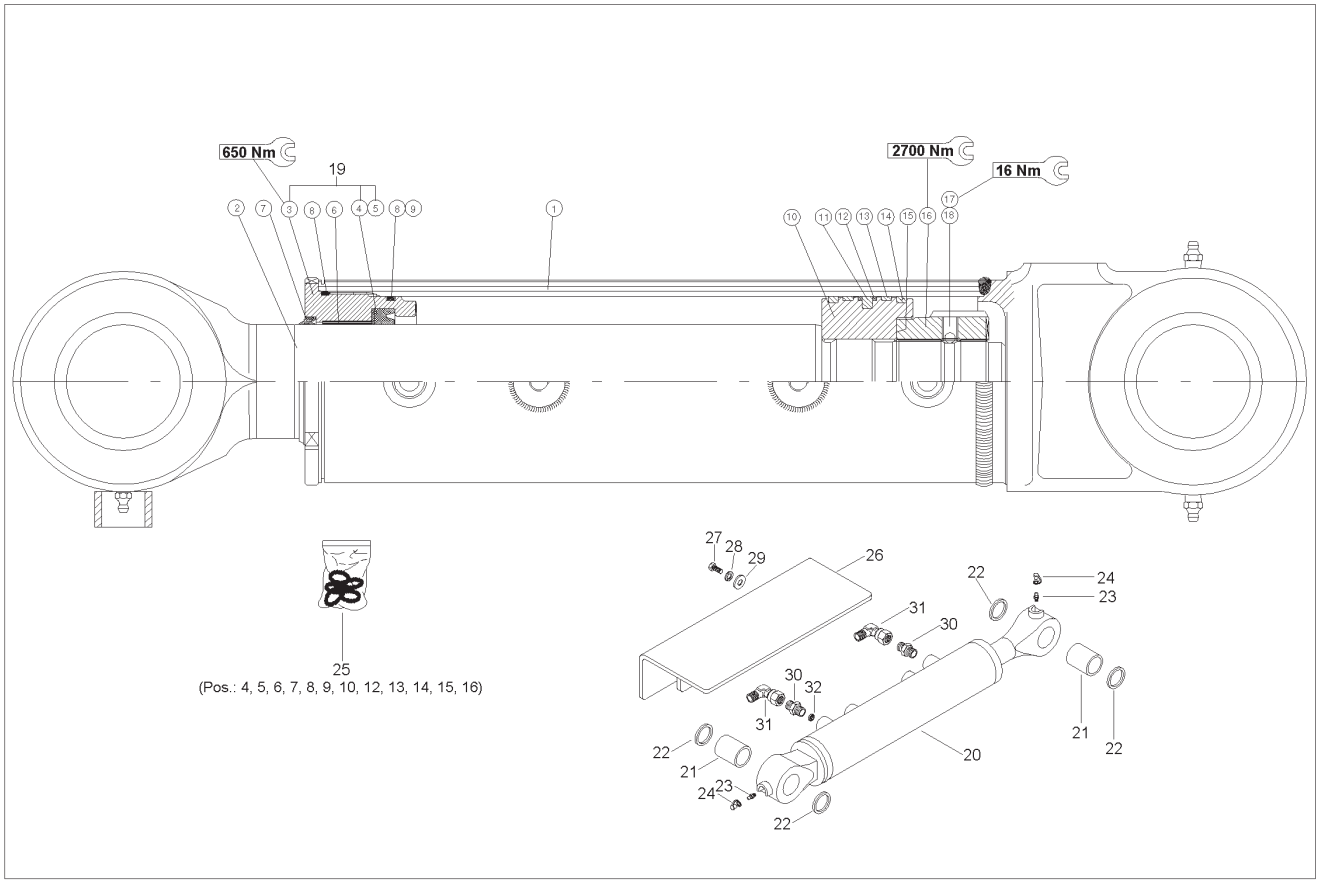

Ref. No.	Part No.	Description	Qty. Req.	Ref. No.	Part No.	Description	Qty. Req.
1	164609	REPAIR KIT CYLINDER HOUSING	1	17	164595	SCREW	1
2	164610	REPAIR KIT PISTON ROD	1	18	164596	BALL	1
3	164614	CYLINDER HEAD	1	19	164611	REPAIR KIT CYLINDER HEAD	1
4	164604	SEAL	1	20	164464	DOZER BLADE CYLINDER COMPLETE	2
5	164605	WASHER	1	21	164564	BUSHING	4
6	164560	BUSHING	1	22	164565	PIN SEAL	8
7	164606	SEAL	1	23	161412	LUBRICATION NIPPLE	4
8	164607	O–RING	2	24	161419	PROTECTION CAP	4
9	164608	WASHER	1	25	164655	SEAL KIT	1
10	164589	PISTON	1	26	164643	COVER	2
11	164590	SEAL	1	27	656016	CS M12–1.7 X 30 C 8.8	4
12	164615	WASHER	2	28	161670	RING/SNAP S12	4
13	164591	BACKUP RING	2	29	161642	WASHER/GR A 13 ZO	4
14	164592	BACKUP RING	2	30	163352	SCREW	4
15	164593	WASHER	1	31	163354	REDUCTION JOINT	4
16	164594	NUT	1	32	163071	HYDRAULIC MOTOR	2

GE1202 – BOOM OFFSET CYLINDER

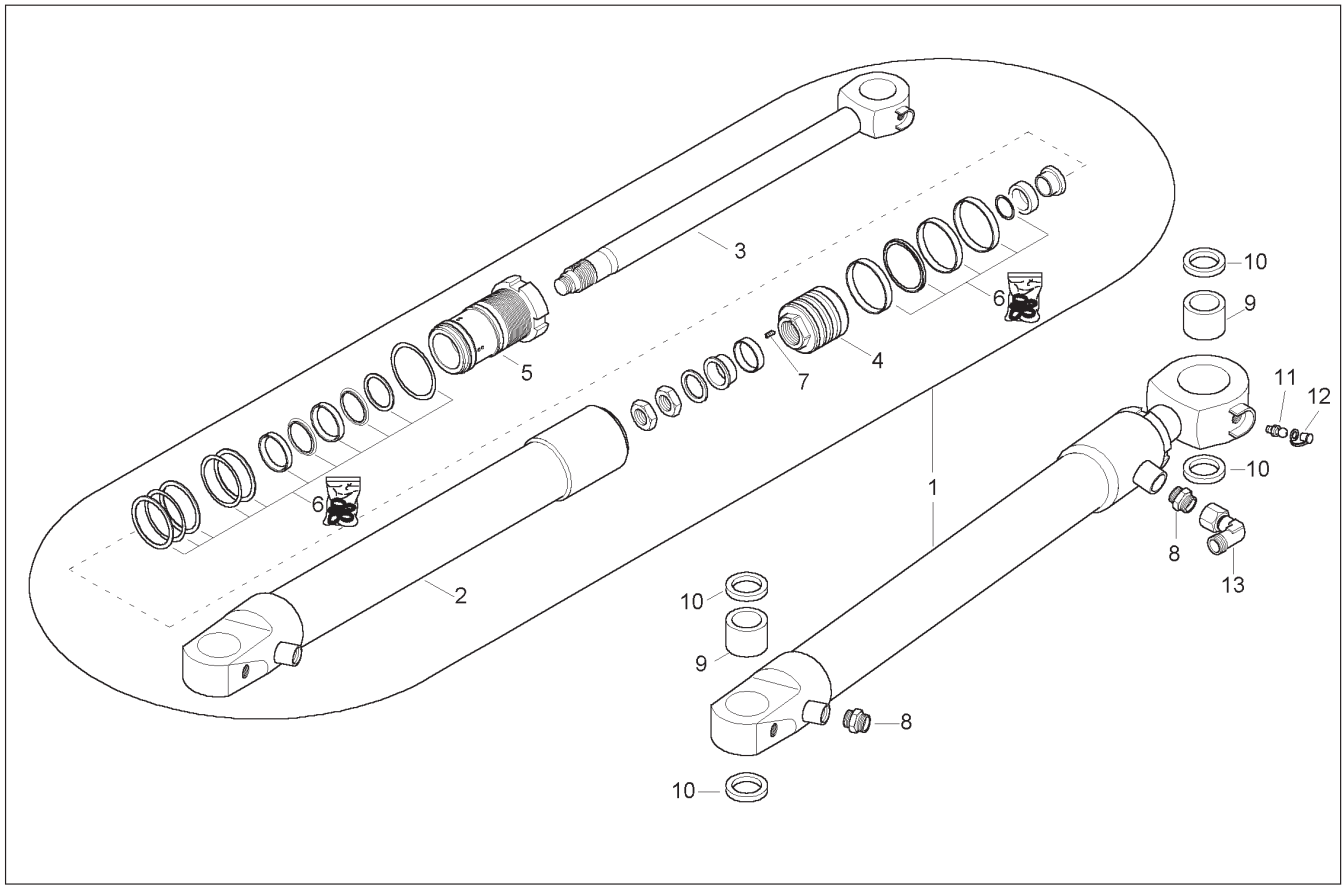

Ref. No.	Part No.	Description	Qty. Req.
01	164465	BOOM OFFSET CYLINDER COMPLETE	1
02	164558	CYLINDER HOUSING	1
03	164559	PISTON ROD	1
04	161165	PISTON	1
05	161170	GLAND	1
06	161217	SEAL KIT	1
07	164899	GRUB SCREW	1
08	163352	SCREW	2
09	163375	NON RETURN VALVE	2
10	161584	SEAL	4
11	161412	LUBRICATION NIPPLE	1
12	161419	PROTECTION CAP	1
13	163354	REDUCTION JOINT	1

GE1202 – HOSES, OIL COOLER

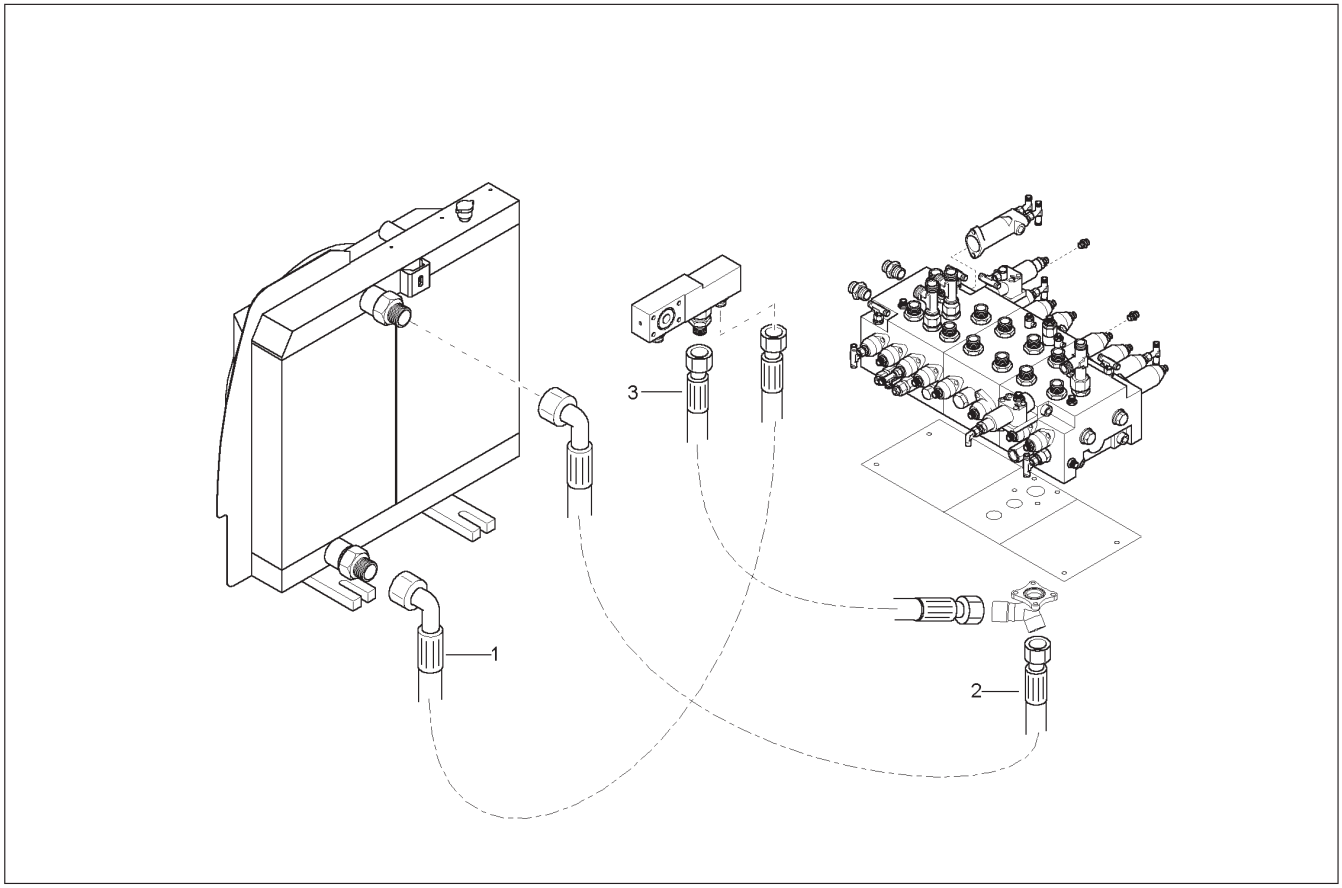

Ref. No.	Part No.	Description	Qty. Req.	Ref. No.	Part No.	Description	Qty. Req.
01	164845	HP HOSE	1	03	164850	HP HOSE	1
02	164847	HP HOSE	1				

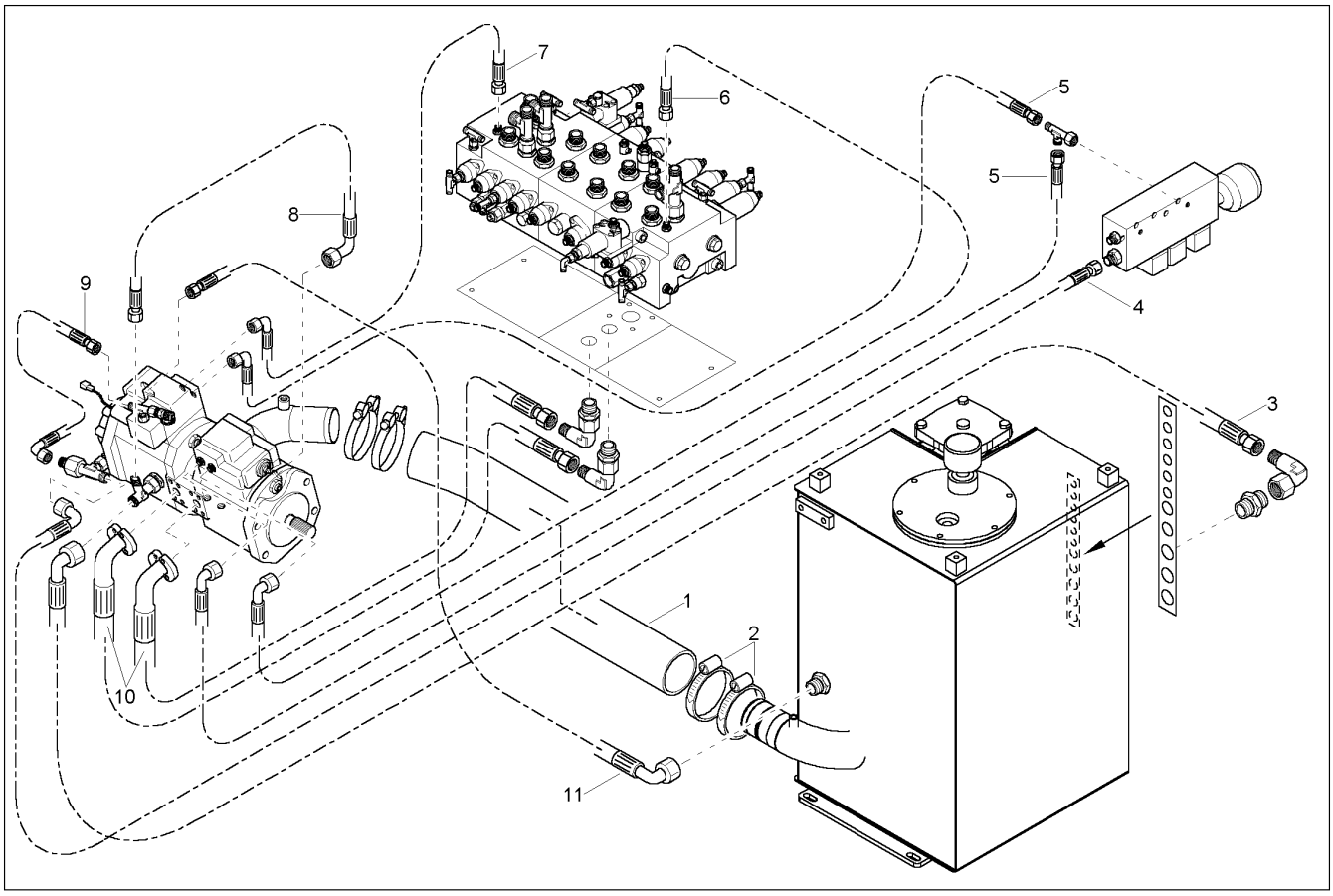

Ref. No.	Part No.	Description	Qty. Req.
01	164501	SUCTION HOSE	1
02	163209	SCREW	4
03	164820	HP HOSE	1
04	164813	HP HOSE	1
05	163292	HP HOSE	2
06	163918	HP HOSE	1
07	164810	HP HOSE	1
08	161312	HIGH PRESSURE HOSE	1
09	161240	HIGH PRESSURE HOSE	1
10	164843	HP HOSE	2
11	164848	HP HOSE	1

GE1202 – HOSES, TRACK DRIVES

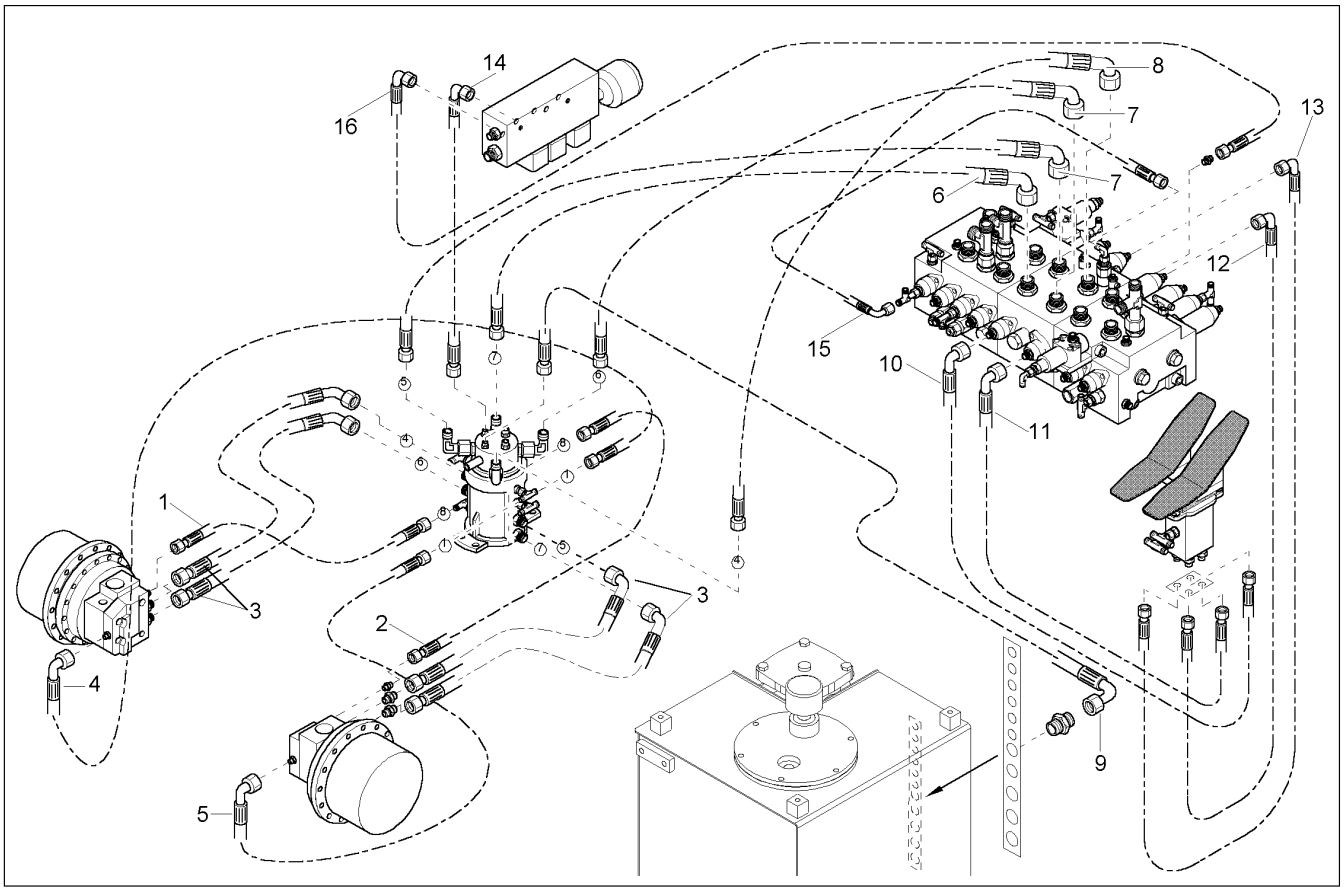

Ref. No.	Part No.	Description	Qty. Req.	Ref. No.	Part No.	Description	Qty. Req.
01	163299	HP HOSE	1	09	164815	HP HOSE	1
02	164814	HP HOSE	1	10	161220	HIGH PRESSURE HOSE	1
03	164837	HP HOSE	4	11	163335	HP HOSE	1
04	164803	HP HOSE	1	12	164796	HP HOSE	1
05	164802	HP HOSE	1	13	164794	HP HOSE	1
06	164832	HP HOSE	1	14	164849	HP HOSE	1
07	164833	HP HOSE	2	15	162960	HP HOSE	1
08	164834	HP HOSE	1	16	161276	HIGH PRESSURE HOSE	1

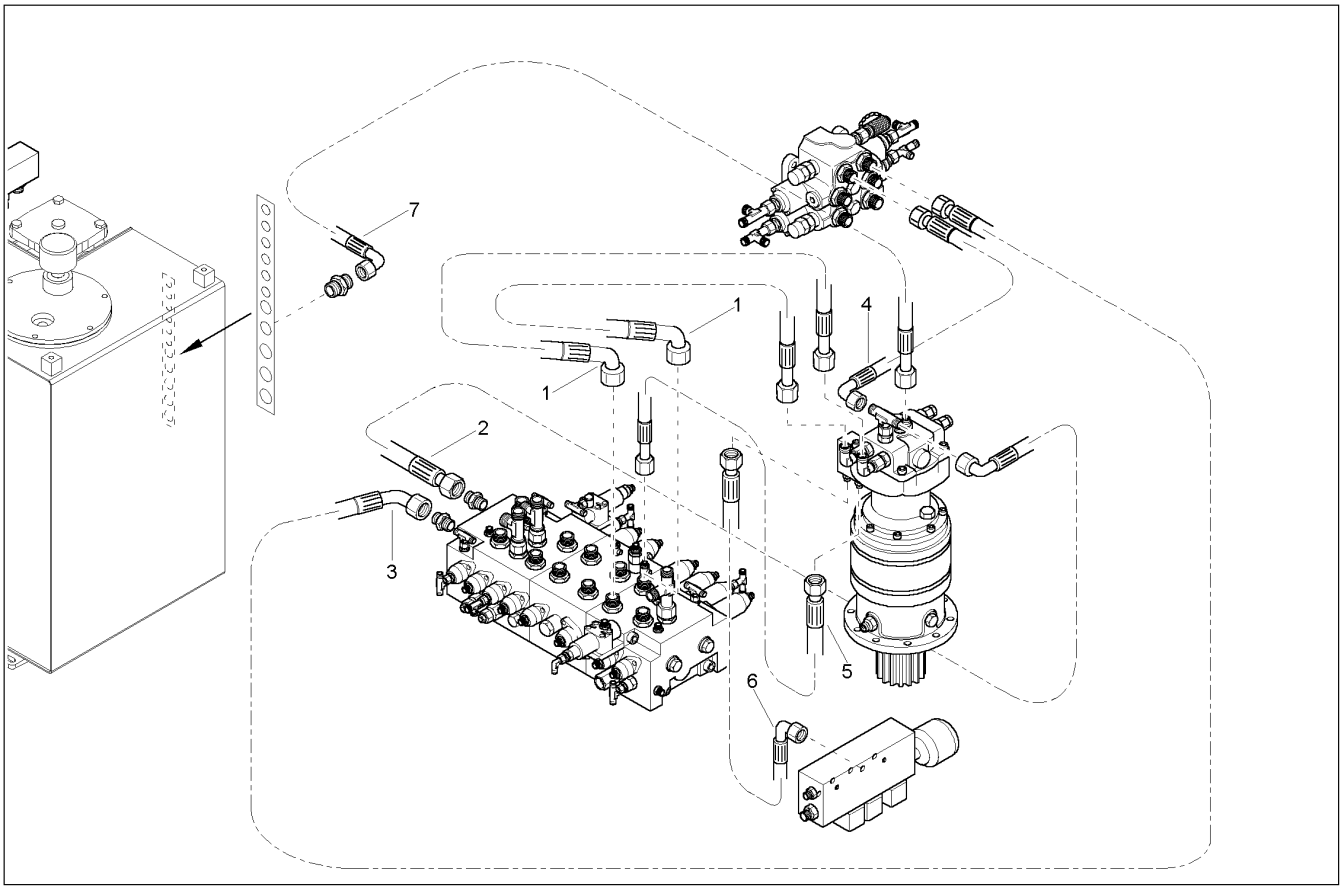

Ref. No.	Part No.	Description	Qty. Req.	Ref. No.	Part No.	Description	Qty. Req.
01	163310	HP HOSE	2	05	164806	HP HOSE	1
02	164842	HP HOSE	1	06	161227	HIGH PRESSURE HOSE	1
03	164836	HP HOSE	1	07	164822	HP HOSE	1
04	164839	HP HOSE	1				

GE1202 – HOSES, CONTROL VALVE RETURN LINES

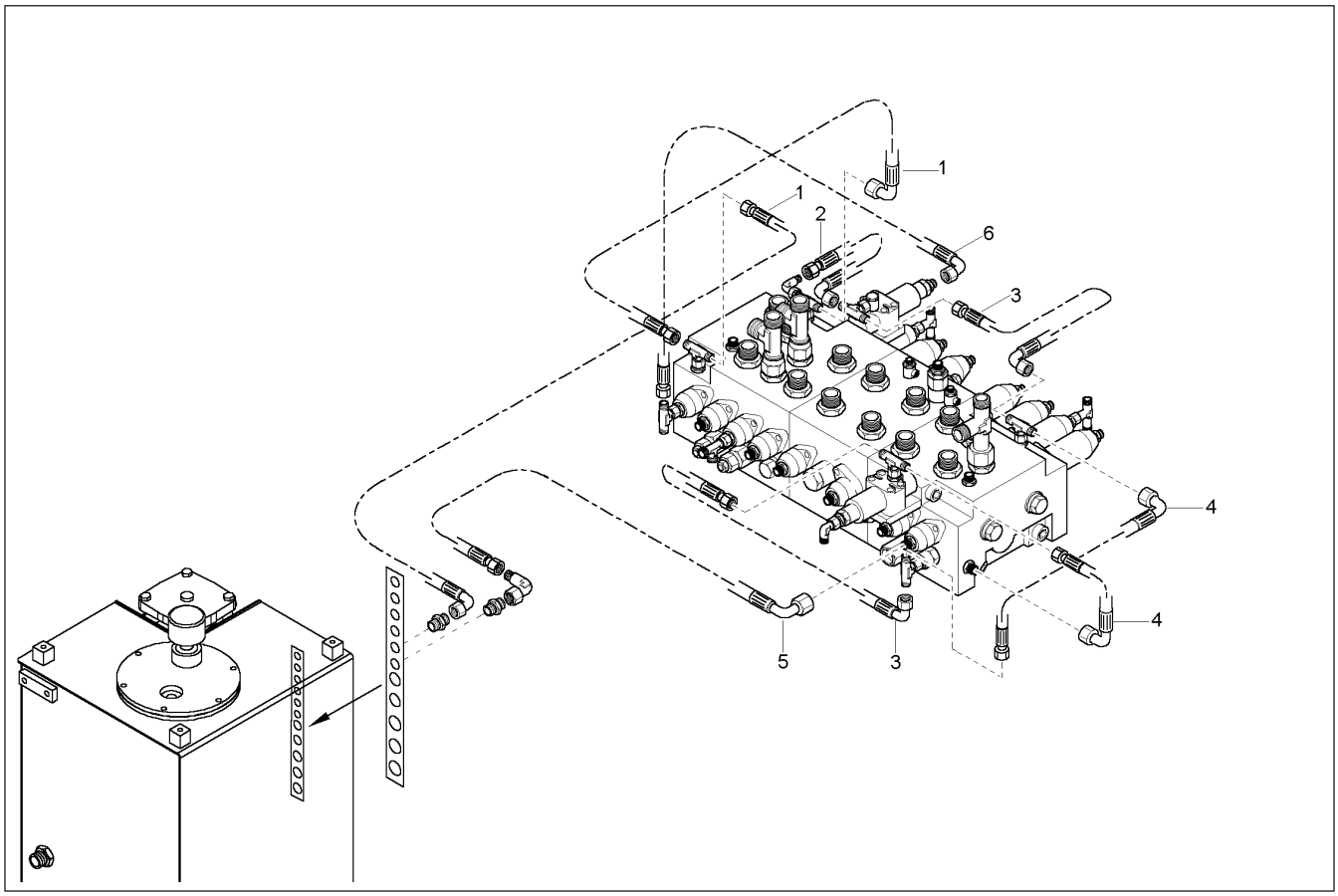

Ref. No.	Part No.	Description	Qty. Req.	Ref. No.	Part No.	Description	Qty. Req.
01	161351	HIGH PRESSURE HOSE	2	04	164792	HP HOSE	2
02	164804	HP HOSE	1	05	164790	HP HOSE	1
03	161236	HIGH PRESSURE HOSE	2	06	164793	HP HOSE	1

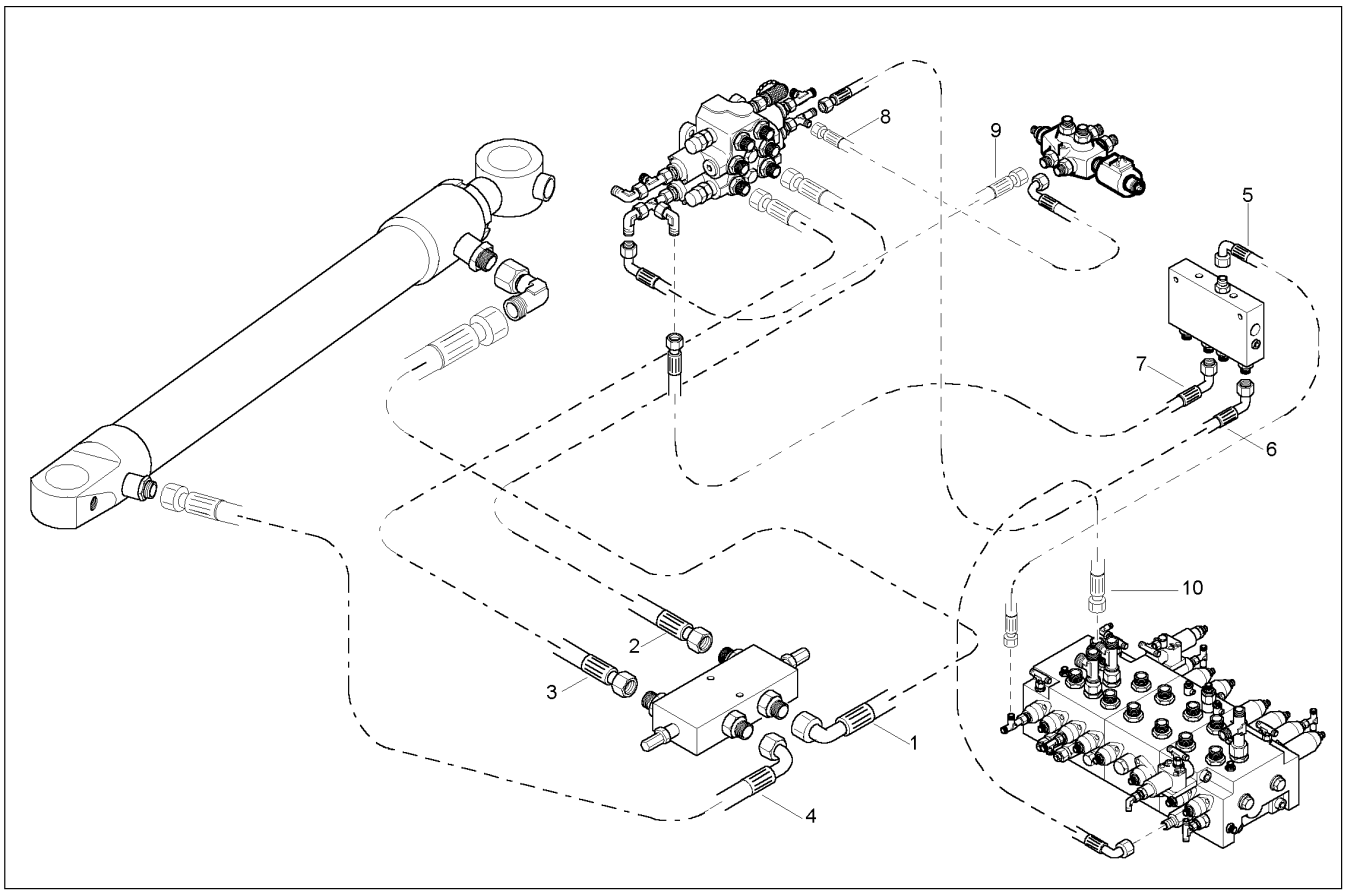

Ref. No.	Part No.	Description	Qty. Req.	Ref. No.	Part No.	Description	Qty. Req.
01	164819	HP HOSE	1	06	161223	HIGH PRESSURE HOSE	1
02	164828	HP HOSE	1	07	162957	HP HOSE	1
03	164826	HP HOSE	1	08	161236	HIGH PRESSURE HOSE	1
04	163304	HP HOSE	1	09	161351	HIGH PRESSURE HOSE	1
05	162445	HP HOSE	1	10	164838	HP HOSE	1

GE1202 – HOSES, DOZER BLADE CYLINDER

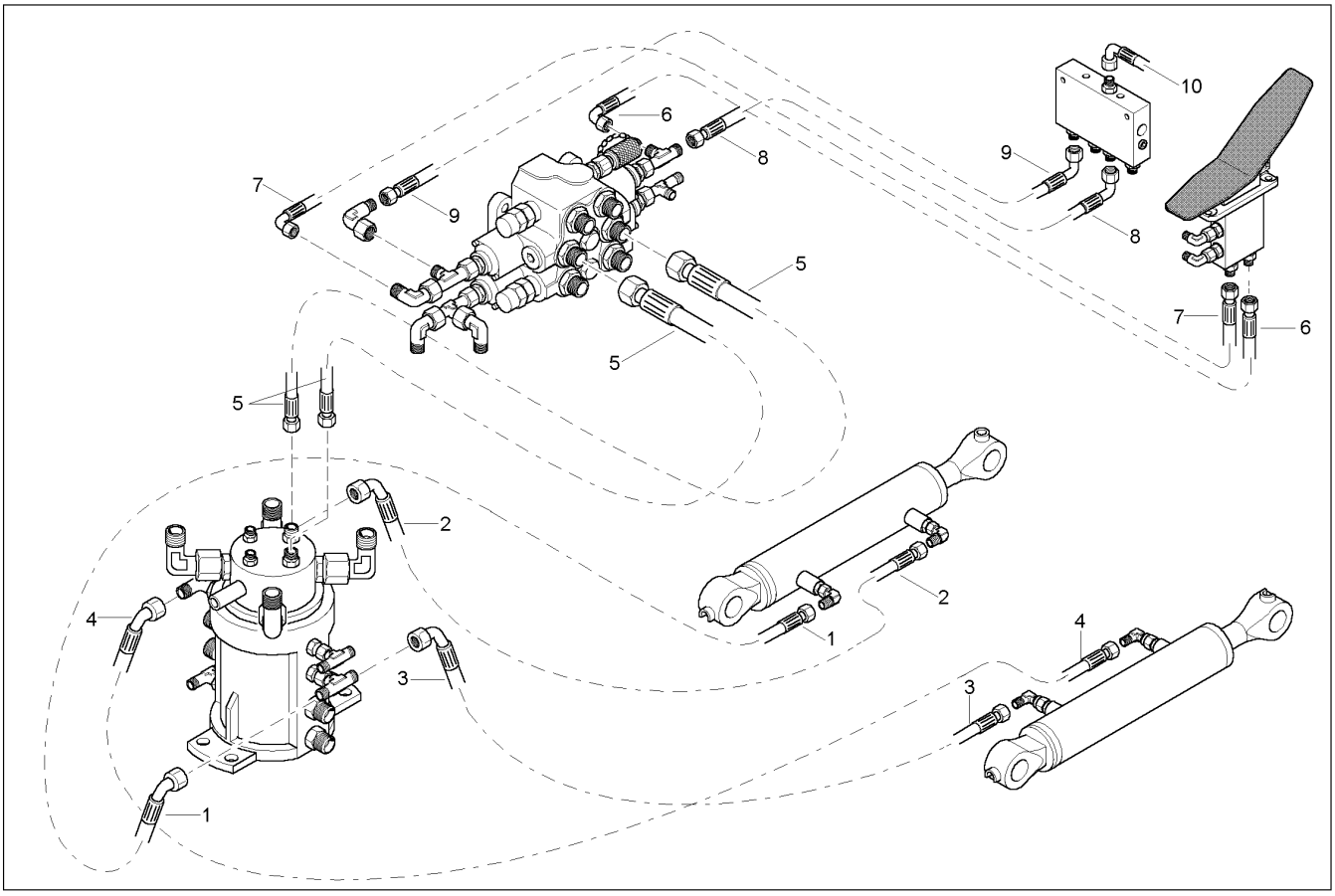

Ref. No.	Part No.	Description	Qty. Req.	Ref. No.	Part No.	Description	Qty. Req.
01	164817	HP HOSE	1	06	161225	HIGH PRESSURE HOSE	1
02	164823	HP HOSE	1	07	161230	HIGH PRESSURE HOSE	1
03	164818	HP HOSE	1	08	161223	HIGH PRESSURE HOSE	1
04	164824	HP HOSE	1	09	162957	HP HOSE	1
05	164825	HP HOSE	2	10	162445	HP HOSE	1

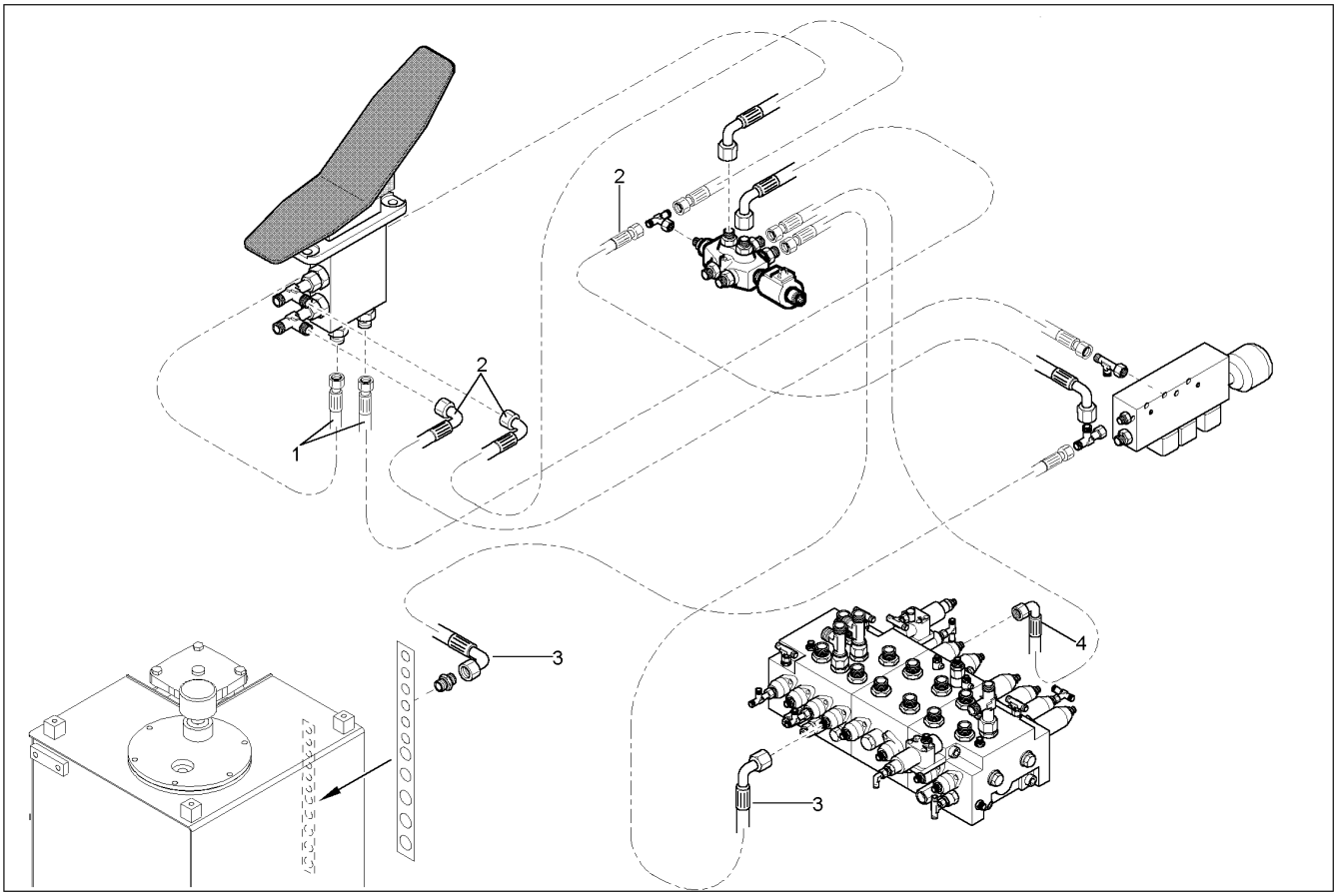

Ref. No.	Part No.	Description	Qty. Req.	Ref. No.	Part No.	Description	Qty. Req.
01	161236	HIGH PRESSURE HOSE	2	03	161276	HIGH PRESSURE HOSE	2
02	164800	HIGH–PRESSURE HOSE	3	04	163335	HP HOSE	1

GE1202 – HOSES, HAND CONTROLS

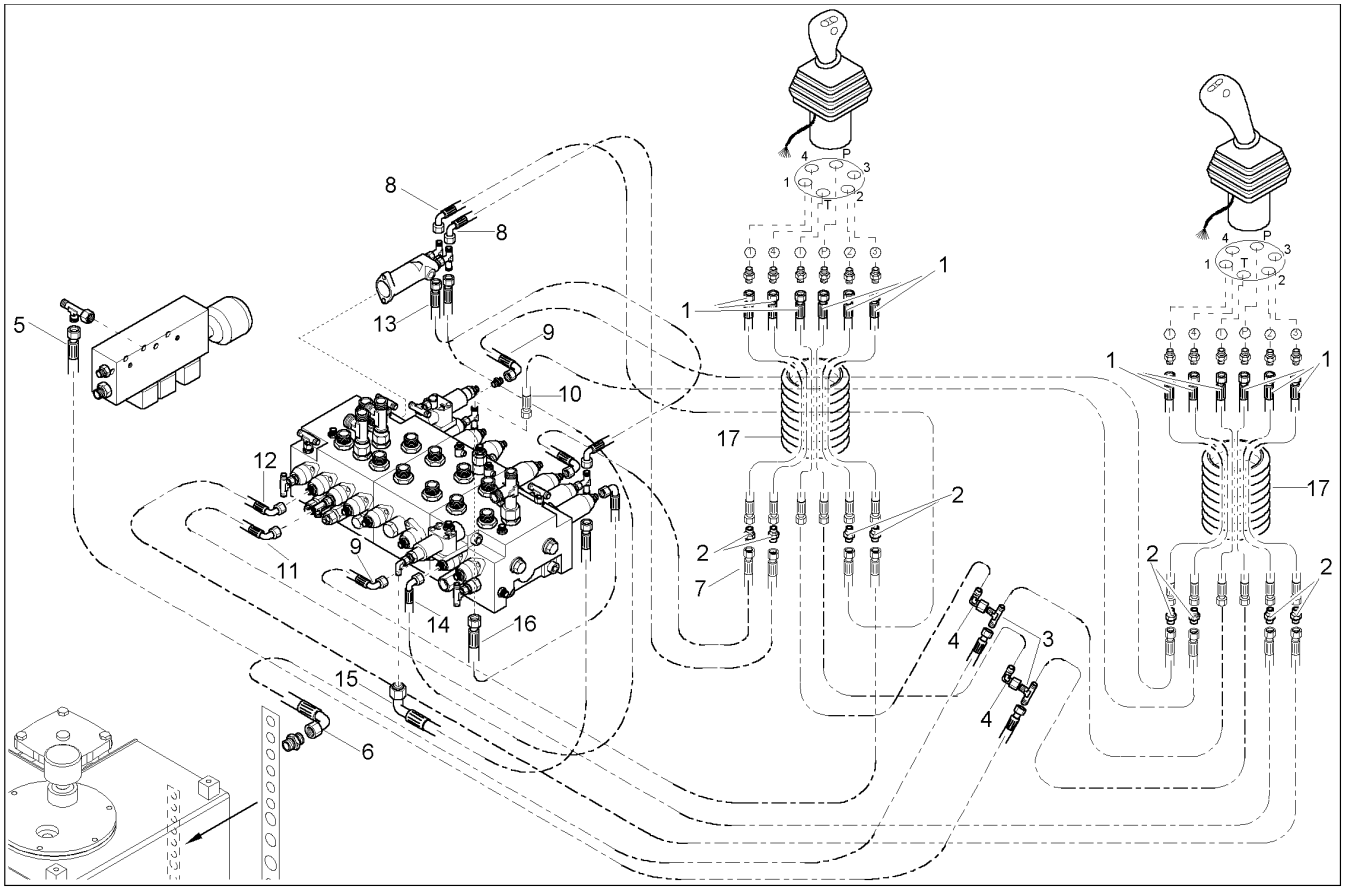

Ref. No.	Part No.	Description	Qty. Req.
01	163288	STICKER SET	12
02	161479	SCREW JOINT	8
03	161465	TEE	2
04	161443	ANGLE	2
05	164798	HP HOSE	1
06	162446	HP HOSE	1
07	164795	HP HOSE	1
08	162444	HP HOSE	2
09	161350	HIGH PRESSURE HOSE	2
10	164799	HP HOSE	1
11	162447	HP HOSE	1
12	161238	HIGH PRESSURE HOSE	1
13	164791	HP HOSE	1
14	164790	HP HOSE	1
15	164797	HP HOSE	1
16	164792	HP HOSE	1
17	164892	PROTECTION HOSE	2

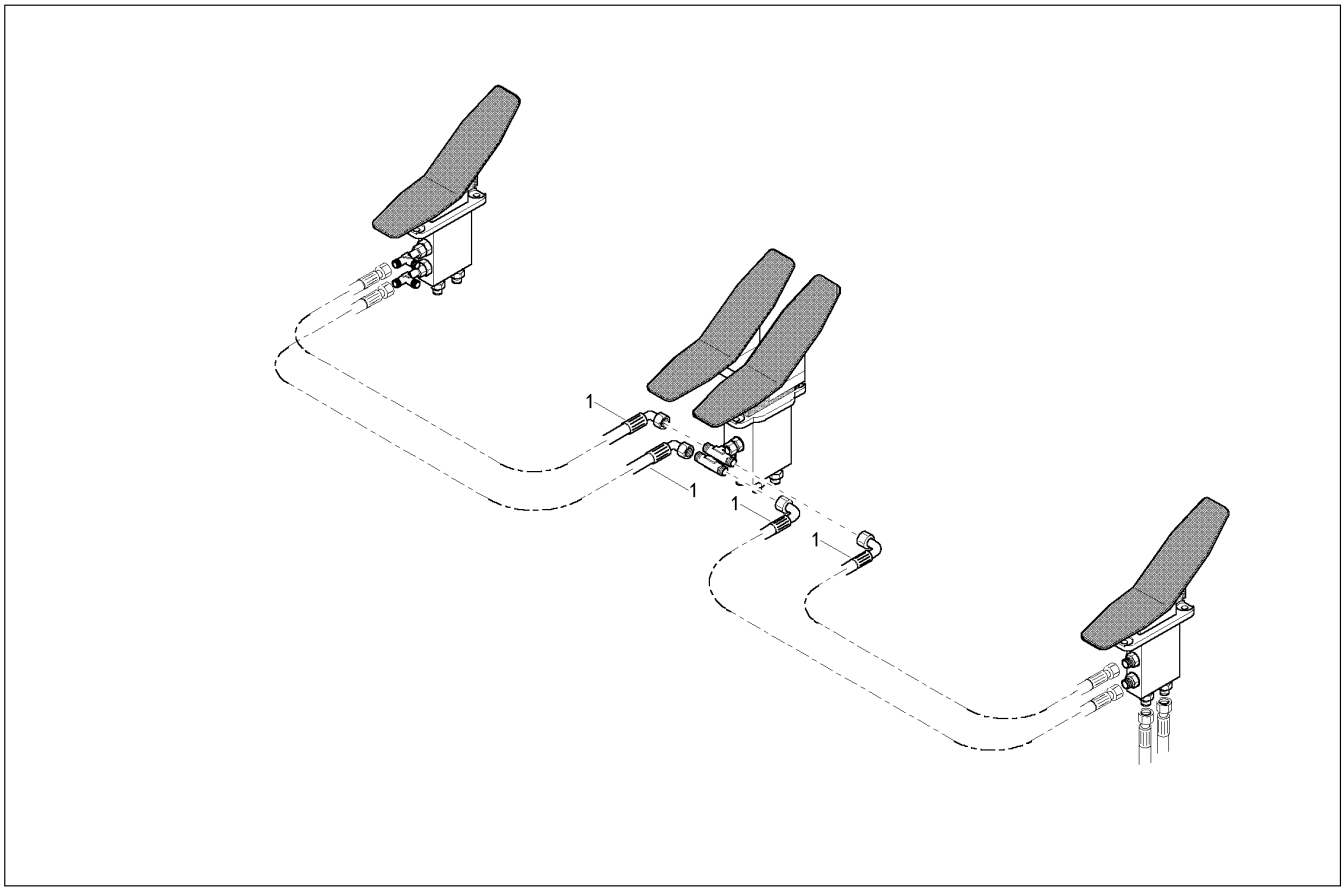

Ref. No.	Part No.	Description	Qty. Req.	Ref. No.	Part No.	Description	Qty. Req.
01	161236	HIGH PRESSURE HOSE	4				

GE1202 – HOSES, BOOM

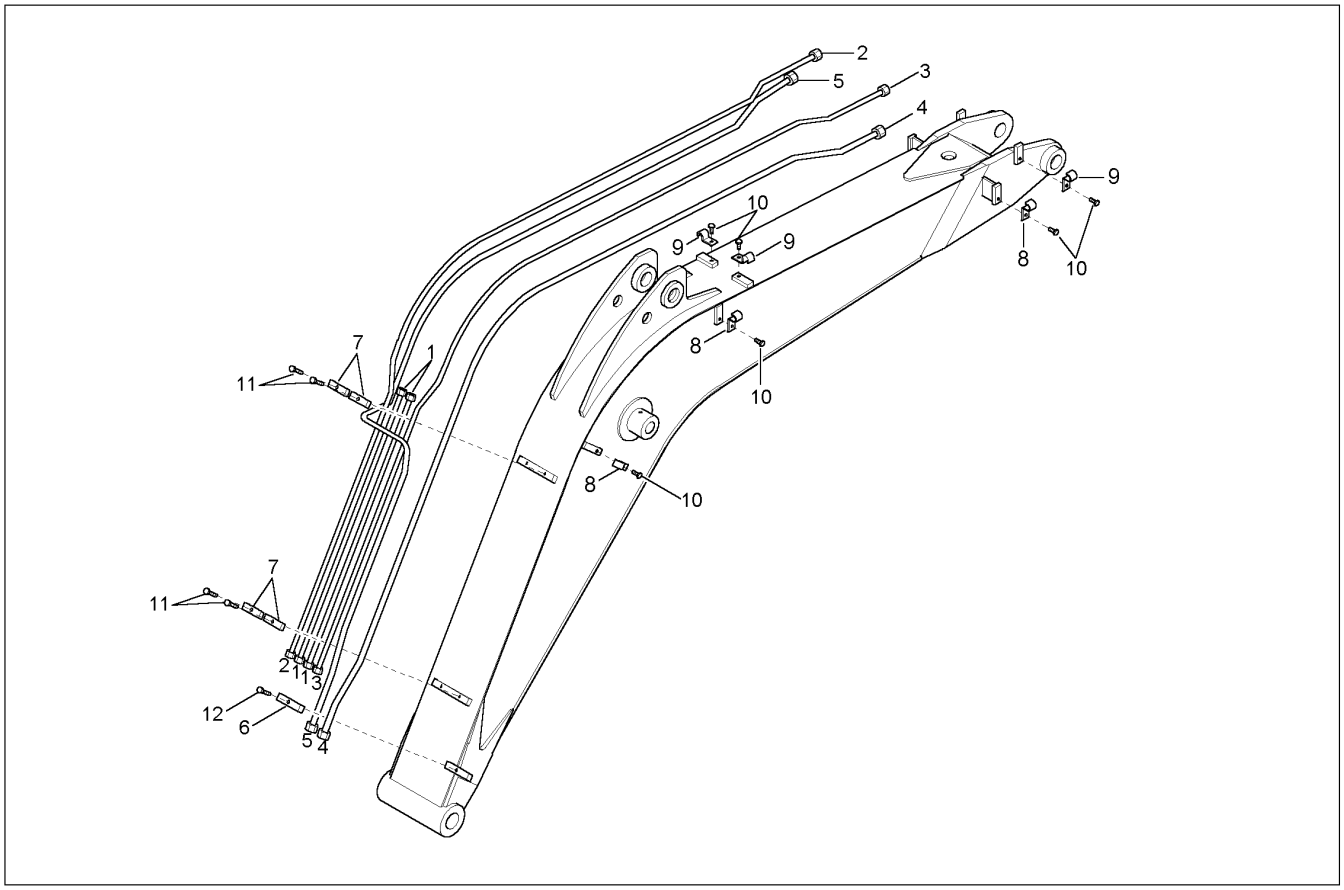

Ref. No.	Part No.	Description	Qty. Req.	Ref. No.	Part No.	Description	Qty. Req.
01	163082	ISOLATION MAT	2	07	163063	TUBE	4
02	164467	TUBE BOOM RIGHT	1	08	163376	BUSHING	6
03	164468	TUBE BOOM LEFT	1	09	163377	COLLAR	4
04	164470	TUBE BOOM RIGHT	1	10	651404	CS M12–1.7 X 20 C 8.8	10
05	164469	TUBE BOOM LEFT	1	11	651408	CS M12–1.7 X 40 C 10.9	4
06	163062	BOOM	1	12	651409	HB M12–1.7X 50 C 10.9	1

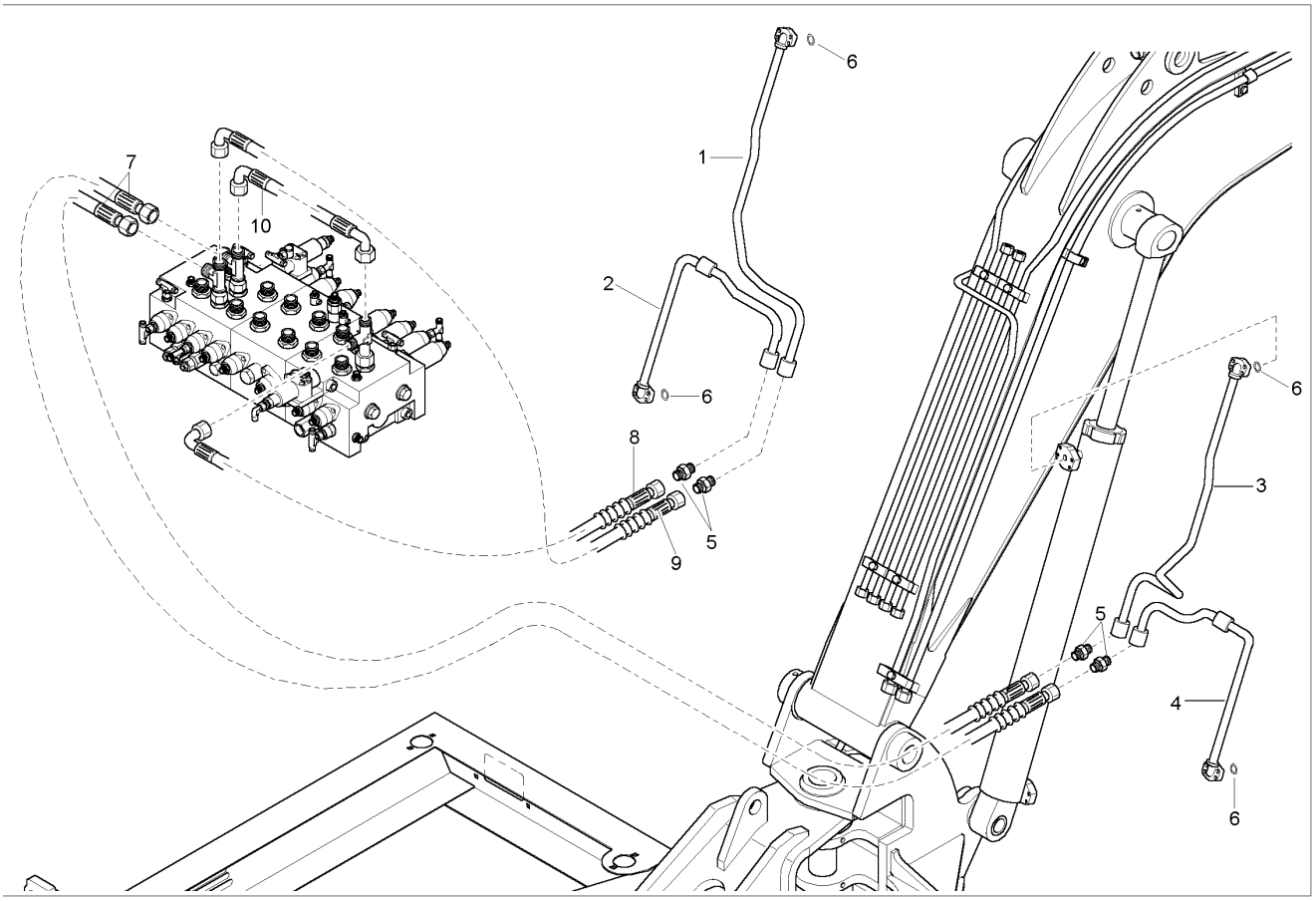

Ref. No.	Part No.	Description	Qty. Req.	Ref. No.	Part No.	Description	Qty. Req.
01	164476	TUBE 1 LEFT	1	06	163379	O–RING	4
02	164488	TUBE LEFT	1	07	163324	HP HOSE	2
03	164474	TUBE 1 RIGHT	1	08	164829	HP HOSE	1
04	164487	TUBE RIGHT	1	09	163323	HP HOSE	1
05	163373	REDUCTION JOINT	4	10	164835	HP HOSE	1

GE1202 – HOSES, DIPPER ARM

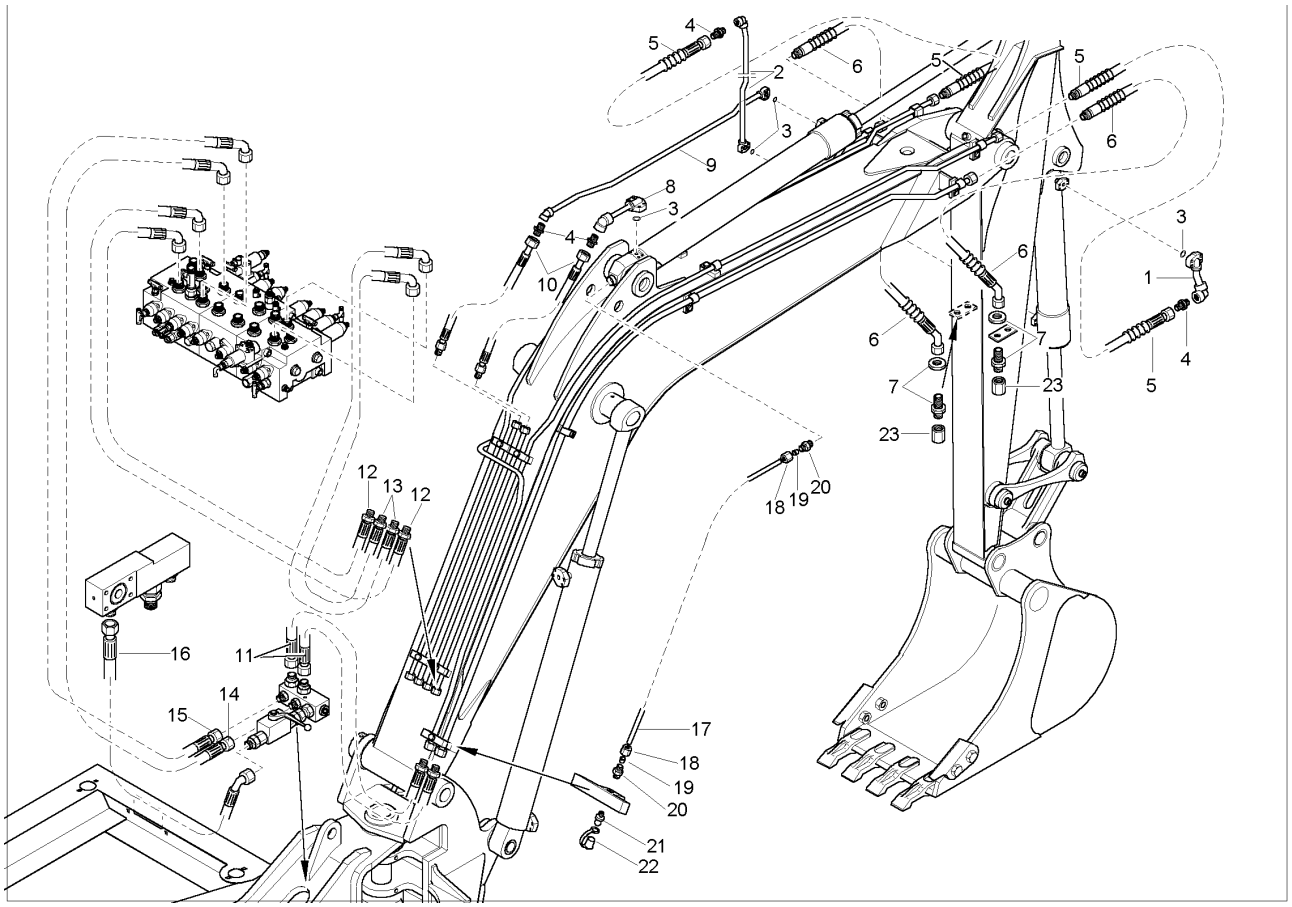

Ref. No.	Part No.	Description	Qty. Req.
01	164473	TUBE 1	1
02	164472	TUBE 2	1
03	163379	O–RING	4
04	163373	REDUCTION JOINT	4
05	163322	HP HOSE	2
06	163327	HP HOSE	2
07	164943	SCREW JOINT	2
08	163090	TUBE	1
09	164475	TUBE 2	1
10	163319	HP HOSE	2
11	164844	HP HOSE	2
12	164830	HP HOSE	2
13	164831	HP HOSE	2
14	164840	HP HOSE	1
15	164841	HP HOSE	1
16	164846	HP HOSE	1
17	161392	LUBRICATION TUBE	2.25
18	161468	NUT	2
19	161469	WASHER	2
20	161461	SCREW JOINT	2
21	161411	LUBRICATION NIPPLE	1
22	161422	PROTECTION CAP	1
23	164944	PLUG	2

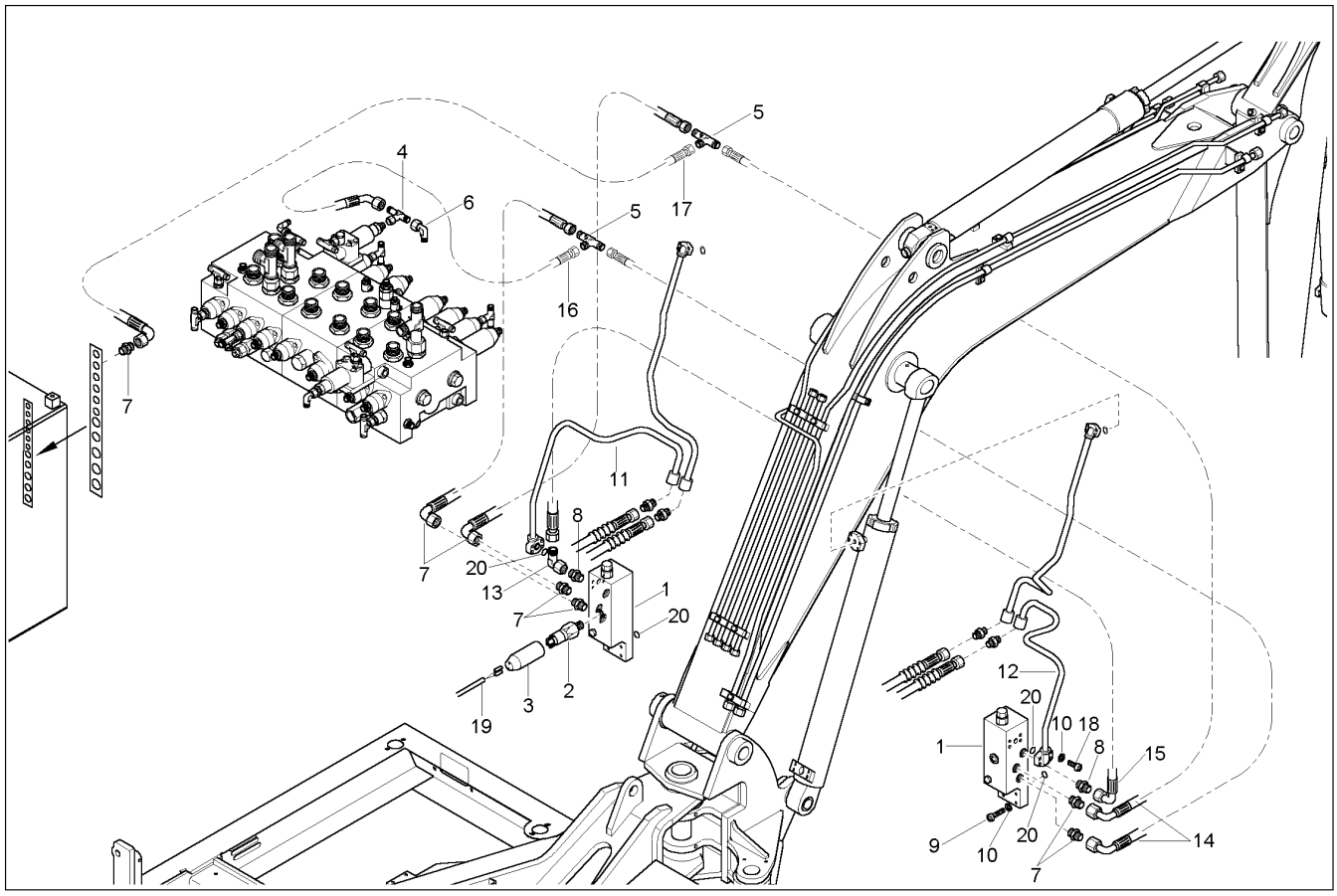

Ref. No.	Part No.	Description	Qty. Req.	Ref. No.	Part No.	Description	Qty. Req.
01	164498	VALVE	2	11	164485	TUBE	1
02	164869	PRESSURE SWITCH	1	12	164484	TUBE	1
03	164870	PROTECTION CAP	1	13	164942	ANGLE	1
04	161450	TEE	1	14	164801	HP HOSE	4
05	161465	TEE	2	15	164807	HP HOSE	1
06	161443	ANGLE	1	16	164808	HP HOSE	1
07	161426	SCREW JOINT	5	17	164805	HP HOSE	1
08	164941	SCREW JOINT	2	18	162859	SCREW	8
09	164911	SCREW	8	19	164277	CABLE	1
10	656110	LW M8	16	20	163379	O–RING	4

GE1202 - HOSES, STALL LOAD WARNING DEVICE

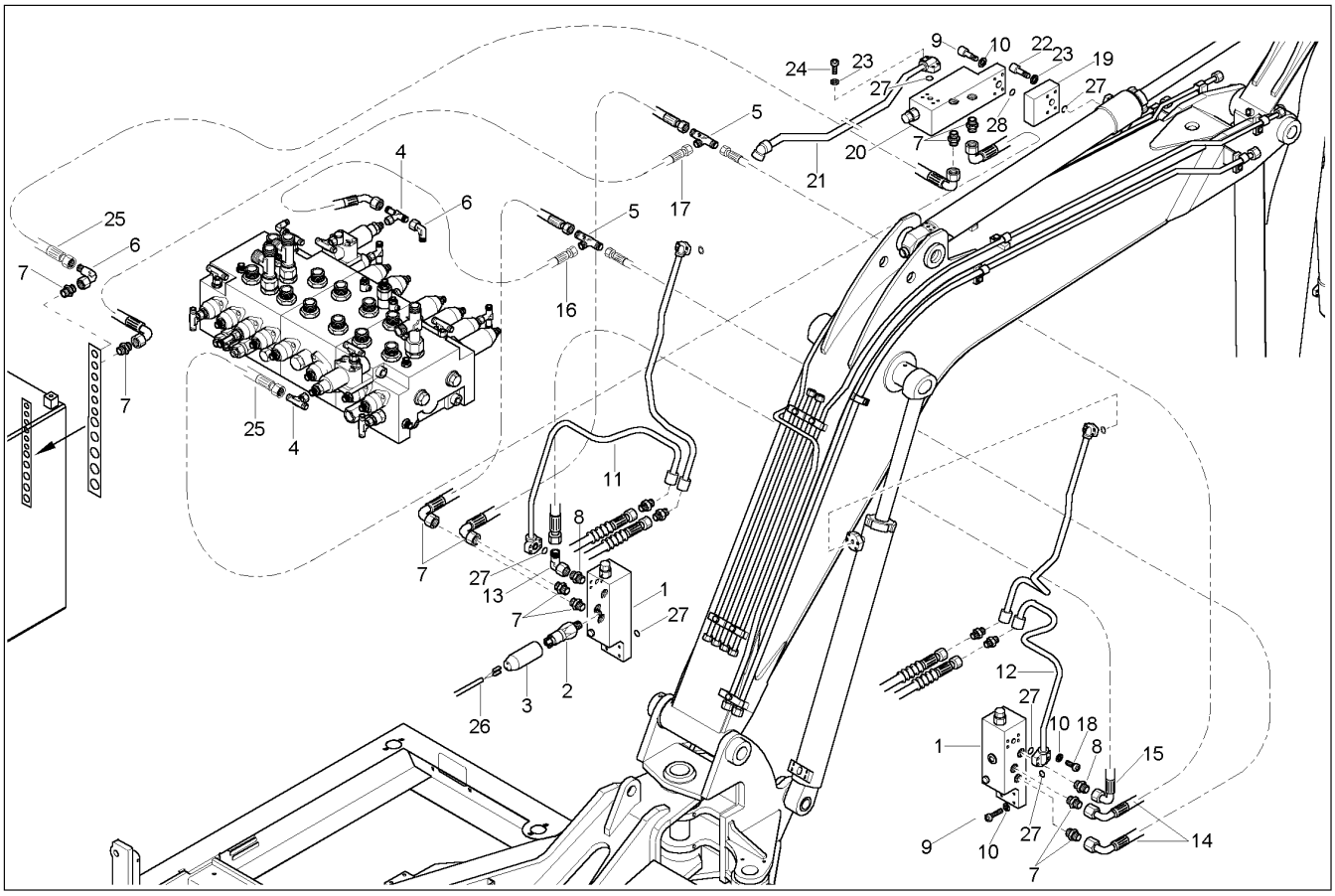

Ref. No.	Part No.	Description	Qty. Req.	Ref. No.	Part No.	Description	Qty. Req.
01	164498	VALVE	2	15	164807	HP HOSE	1
02	164869	PRESSURE SWITCH	1	16	164808	HP HOSE	1
03	164870	PROTECTION CAP	1	17	164805	HP HOSE	1
04	161450	TEE	2	18	162859	SCREW	8
05	161465	TEE	2	19	164536	PLATE	1
06	161443	ANGLE	2	20	164534	VALVE	1
07	164939	ELBOW	8	21	164486	TUBE	1
08	164941	SCREW JOINT	2	22	164897	SCREW	4
09	164911	SCREW	12	23	161623	LW SPRING B10 DIN7981	8
10	656110	LW M8	20	24	162022	SCREW	4
11	164485	TUBE	1	25	164809	HP HOSE	2
12	164484	TUBE	1	26	164277	CABLE	1
13	164942	ANGLE	1	27	163379	O–RING	6
14	164801	HP HOSE	4	28	161586	O–RING	1

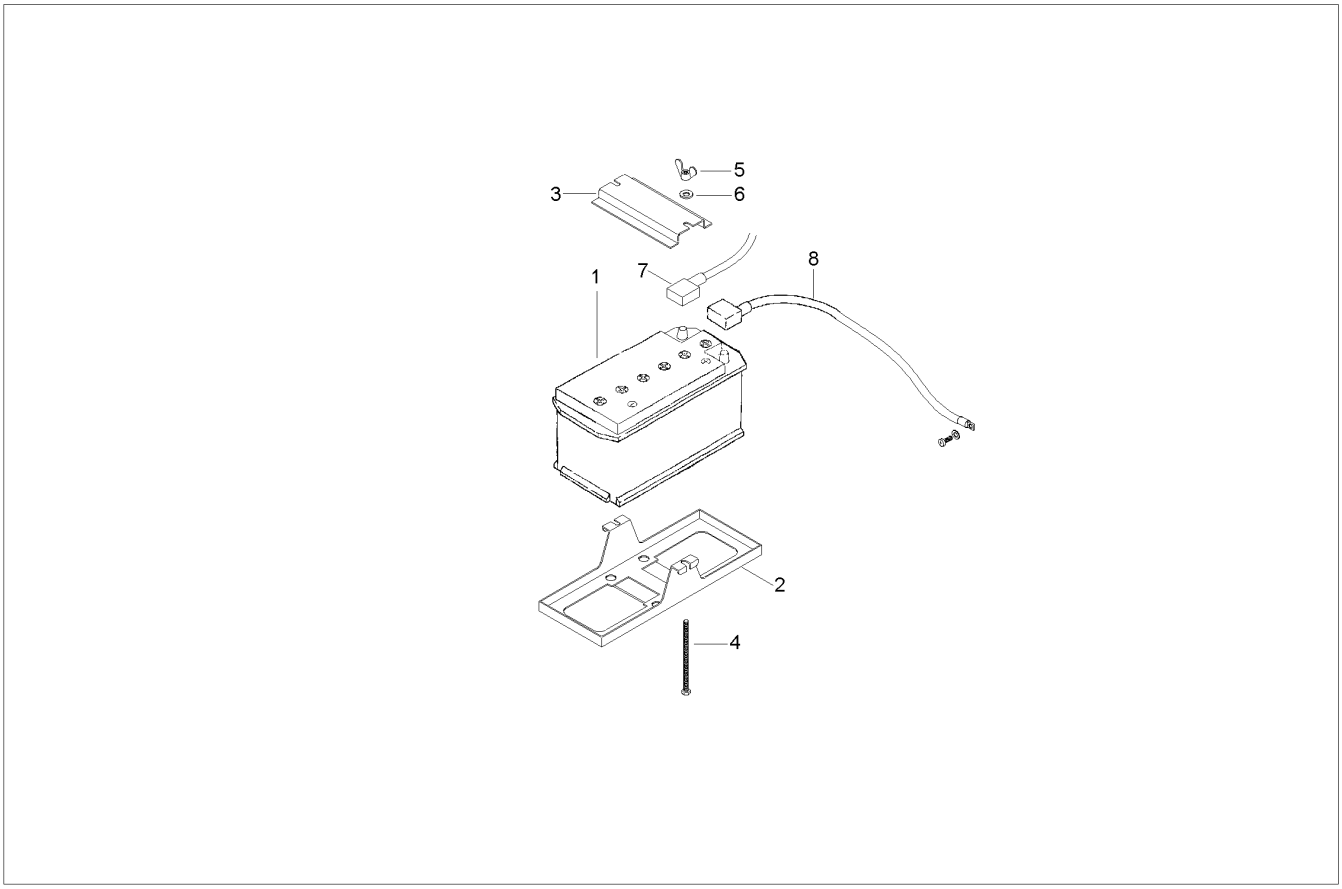

Ref. No.	Part No.	Description	Qty. Req.	Ref. No.	Part No.	Description	Qty. Req.
01	164873	BATTERY	1	05	164918	NUT	2
02	164226	BATTERY CARRIER	1	06	161640	WASHER/GR A 10.5	2
03	164227	BRACKET	1	07	164273	CABLE	1
04	164228	GRUB SCREW	2	08	164274	CABLE	1

GE1202 – ELECTRICAL, ENGINE HARNESS

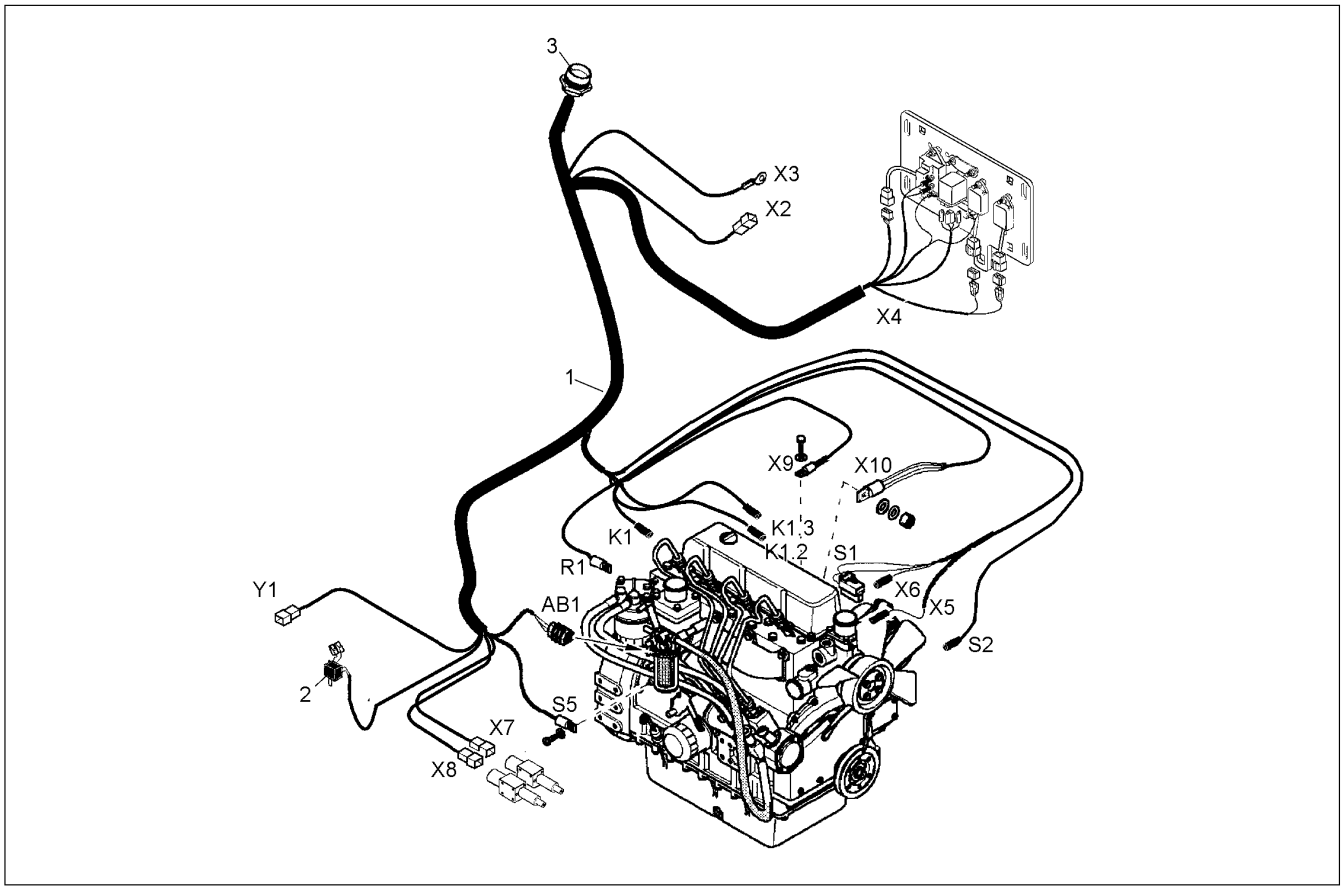

Ref. No.	Part No.	Description	Qty. Req.	Ref. No.	Part No.	Description	Qty. Req.
01	164279	ENGINE WIRE HARNESS	1	03	162851	CONNECTOR	1
02	161387	RELAY	1				

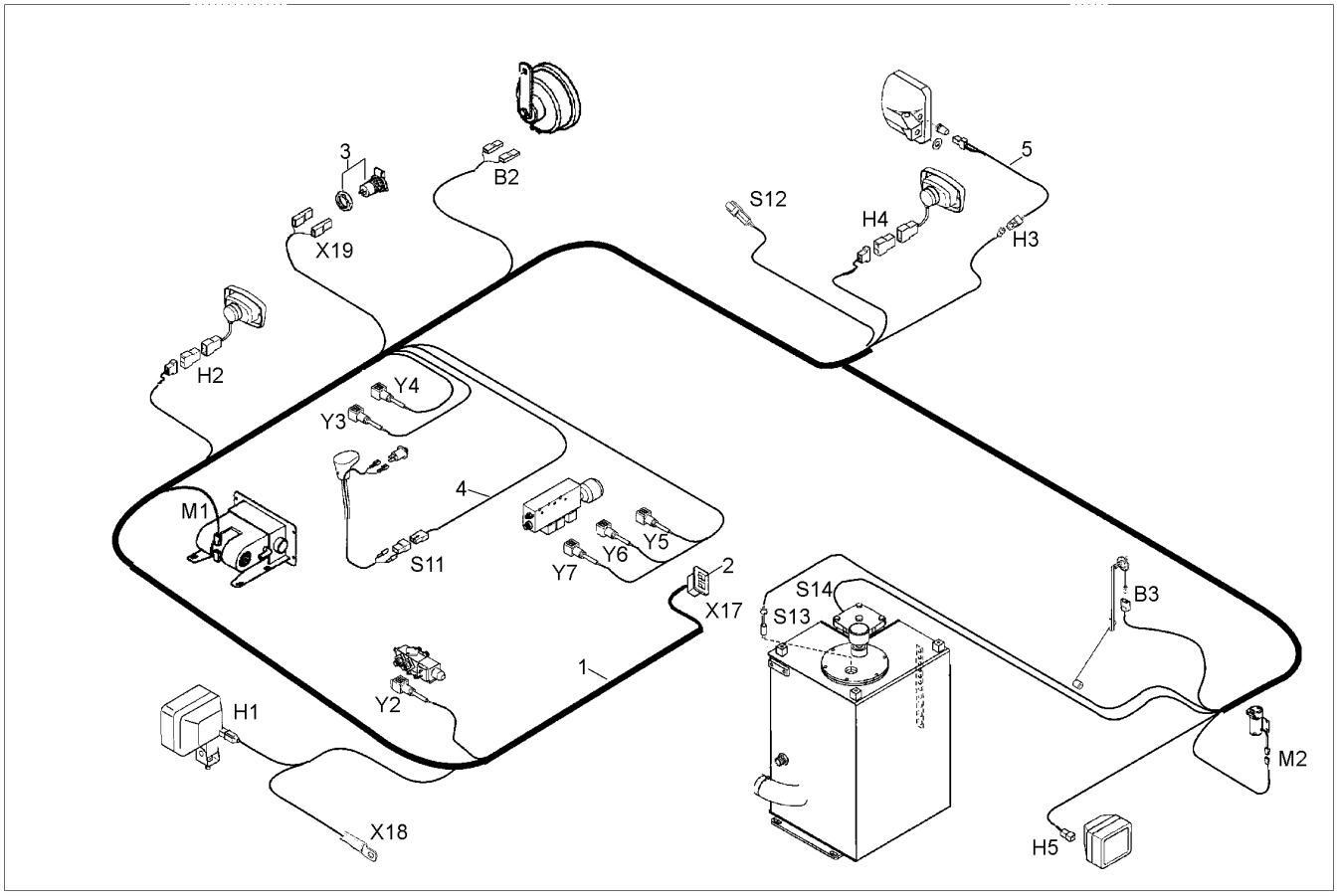

Ref. No.	Part No.	Description	Qty. Req.
01	164280	CHASSIS WIRE HARNESS	1
02	162849	CONNECTOR	1
03	161732	SOCKET	1
04	164284	CABLE	1
05	164275	HARNESS WIRING	1

GE1202 – ELECTRICAL, LEFT ARMREST

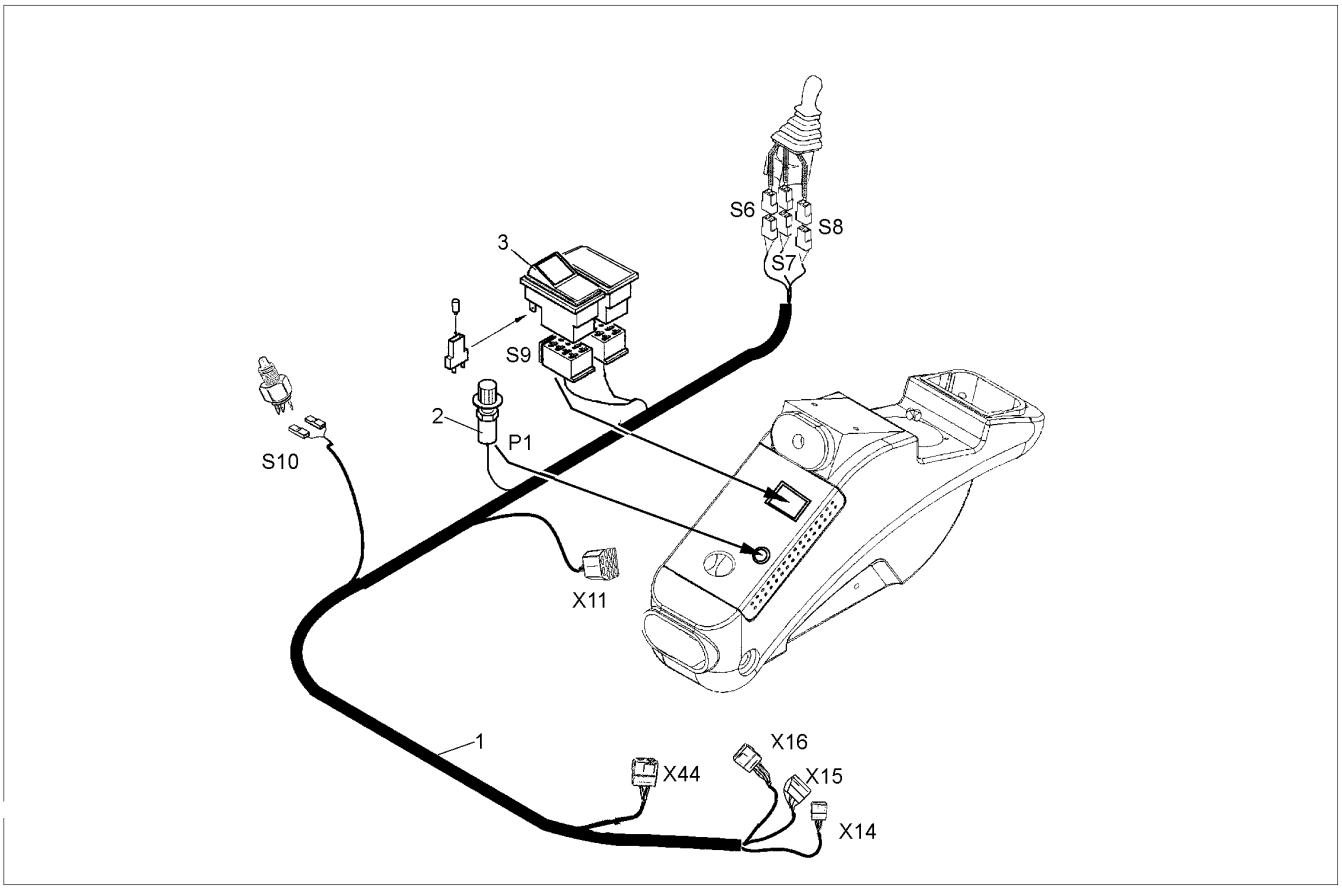

Ref. No.	Part No.	Description	Qty. Req.	Ref. No.	Part No.	Description	Qty. Req.
01	164282	ARMREST	1	03	164286	SWITCH	1
02	164283	POTENTIOMETER	1				

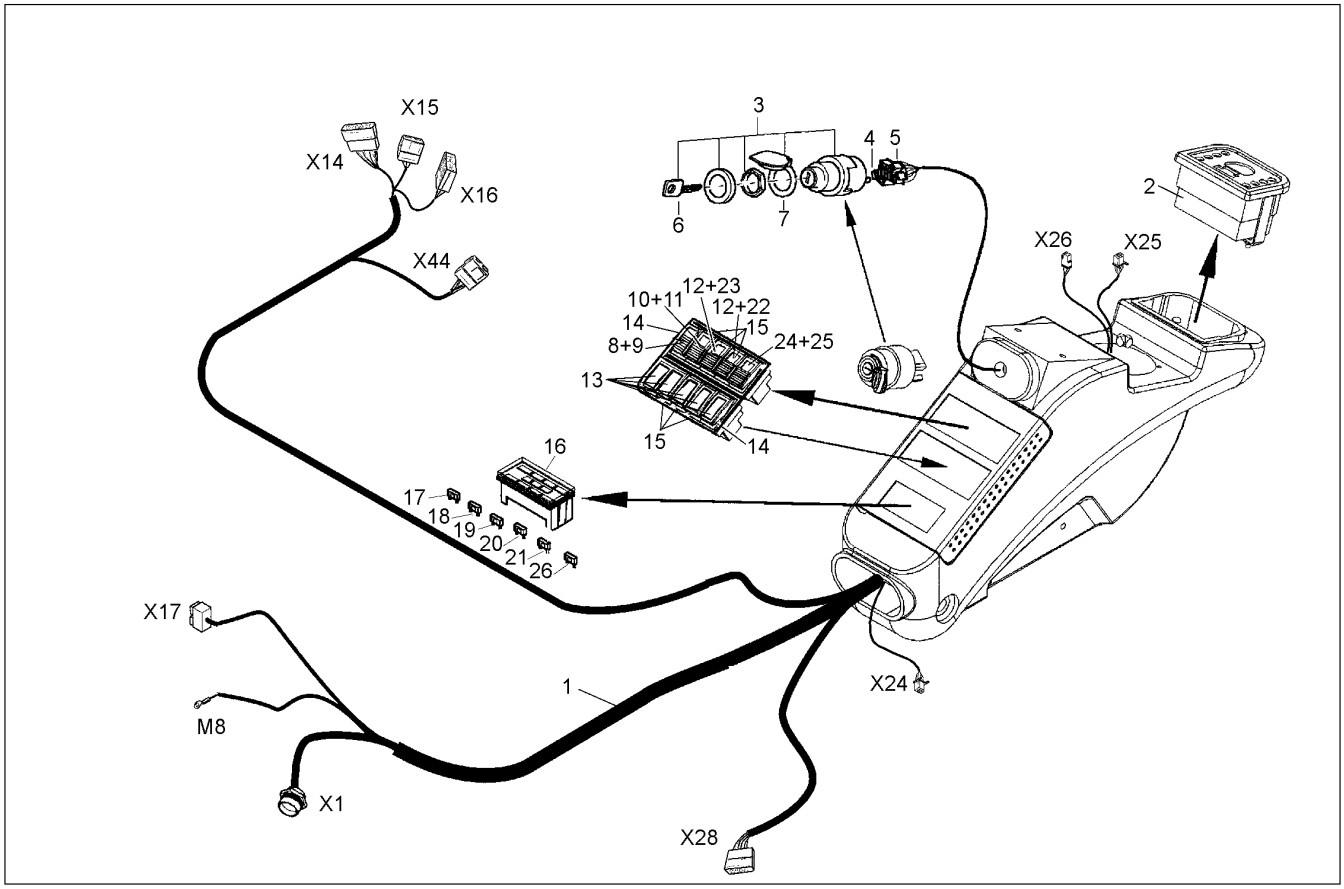

Ref. No.	Part No.	Description	Qty. Req.	Ref. No.	Part No.	Description	Qty. Req.
1	164281	WIRE HARNESS	1	14	164693	FRAME	4
2	164285	DISPLAY UNIT	1	15	164694	FRAME	6
3	164695	IGNITION LOCK	1	16	161364	FUSE BOX	1
4	164889	CONNECTOR	1	17	161376	FUSE	1
5	164878	CONNECTOR	1	18	161374	FUSE	3
6	164685	KEY	1	19	161375	FUSE	3
7	164697	COVER	1	20	162836	STRAP	1
8	164881	TUMBLER SWITCH	1	21	164868	FUSE	2
9	164709	SIGN	1	22	164879	SYMBOL	1
10	164882	TUMBLER SWITCH	1	23	164710	SYMBOL	1
11	164708	SIGN	1	24	164884	TUMBLER SWITCH	1
12	164883	SWITCH 0 – 1	2	25	164871	SYMBOL	1
13	164692	COVER	5	26	164872	FUSE	1

GE1202 – ELECTRICAL, RELAY PLATE

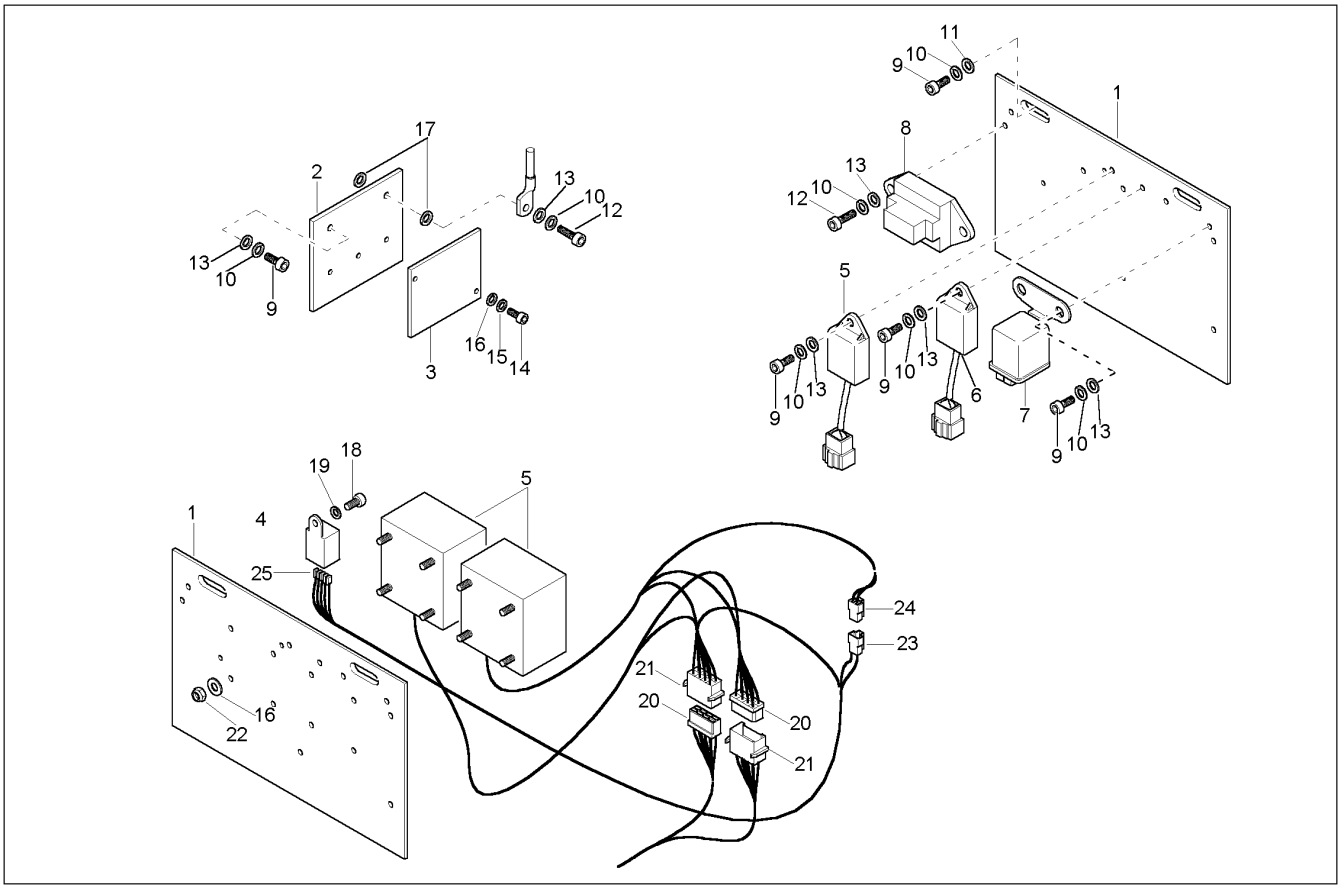

Ref. No.	Part No.	Description	Qty. Req.	Ref. No.	Part No.	Description	Qty. Req.
01	164265	PLATE FOR RELAY 1	2	12	651507	SHCS HS M6–1 X 20 8.8	3
02	164266	PLATE FOR RELAY 2	1	13	161660	WASHER/GR A 6.4 ZO DIN125	10
03	164267	PROPORTIONAL SENSITIVITY	1	14	164908	SCREW	2
04	164276	RELAY (5–8SEC.)	1	15	161673	RING/SNAP S4	2
05	164278	STROKE LIMIT CONTROLLER	2	16	161658	WASHER/GR A 4.3 ZO DIN125	10
06	160891	RELAY	1	17	161632	RING/COPPER	2
07	160889	RELAY	1	18	656092	CS M6–1.0 X 12 C 8.8	1
08	161103	RELAY	1	19	656047	HN M6–1.0	1
09	162860	SCREW	8	20	164914	NUT	8
10	161675	RING/SNAP S6	12	21	164867	COUNTER FOR WORKING HOURS	5
11	161666	WASHER/GR A 6.4 ZO DIN9021	4	22	164287	CONTROL UNIT	1

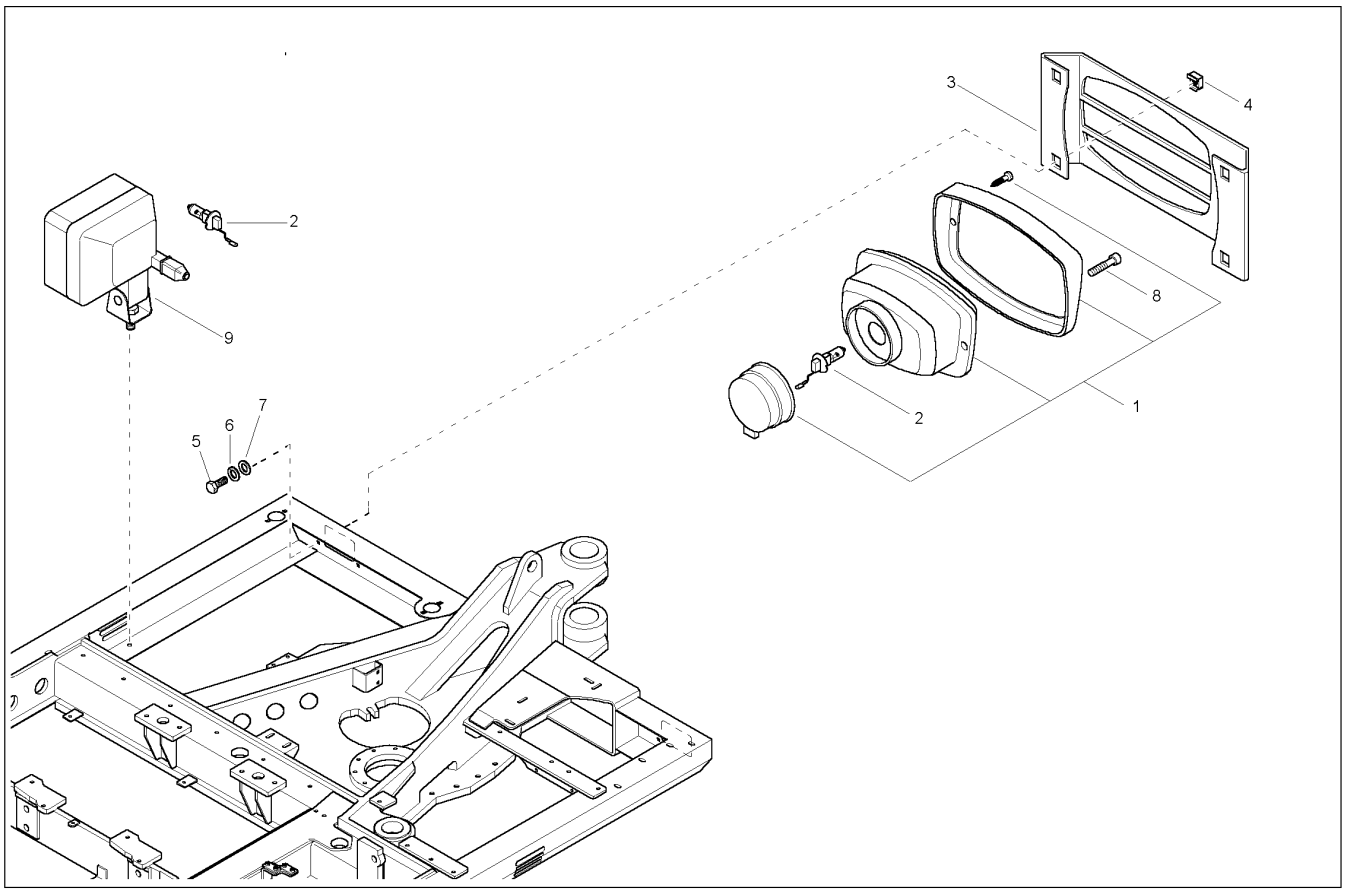

Ref. No.	Part No.	Description	Qty. Req.	Ref. No.	Part No.	Description	Qty. Req.
01	161381	INTEGRATED LIGHT	1	06	161675	RING/SNAP S6	8
02	161367	HALOGEN LAMP	1	07	161666	WASHER/GR A 6.4 ZO DIN9021	8
03	160883	LIGHT COVER	2	08	651501	SHCS HS M4–0.7 X 30 8.8	4
04	161614	NUT/CAGE M6	8	09	160537	WORKING LIGHT	2
05	656149	CS M6–1.0 X 16 C 8.8	8				

GE1202 – ELECTRICAL, BOOM WORK LIGHT

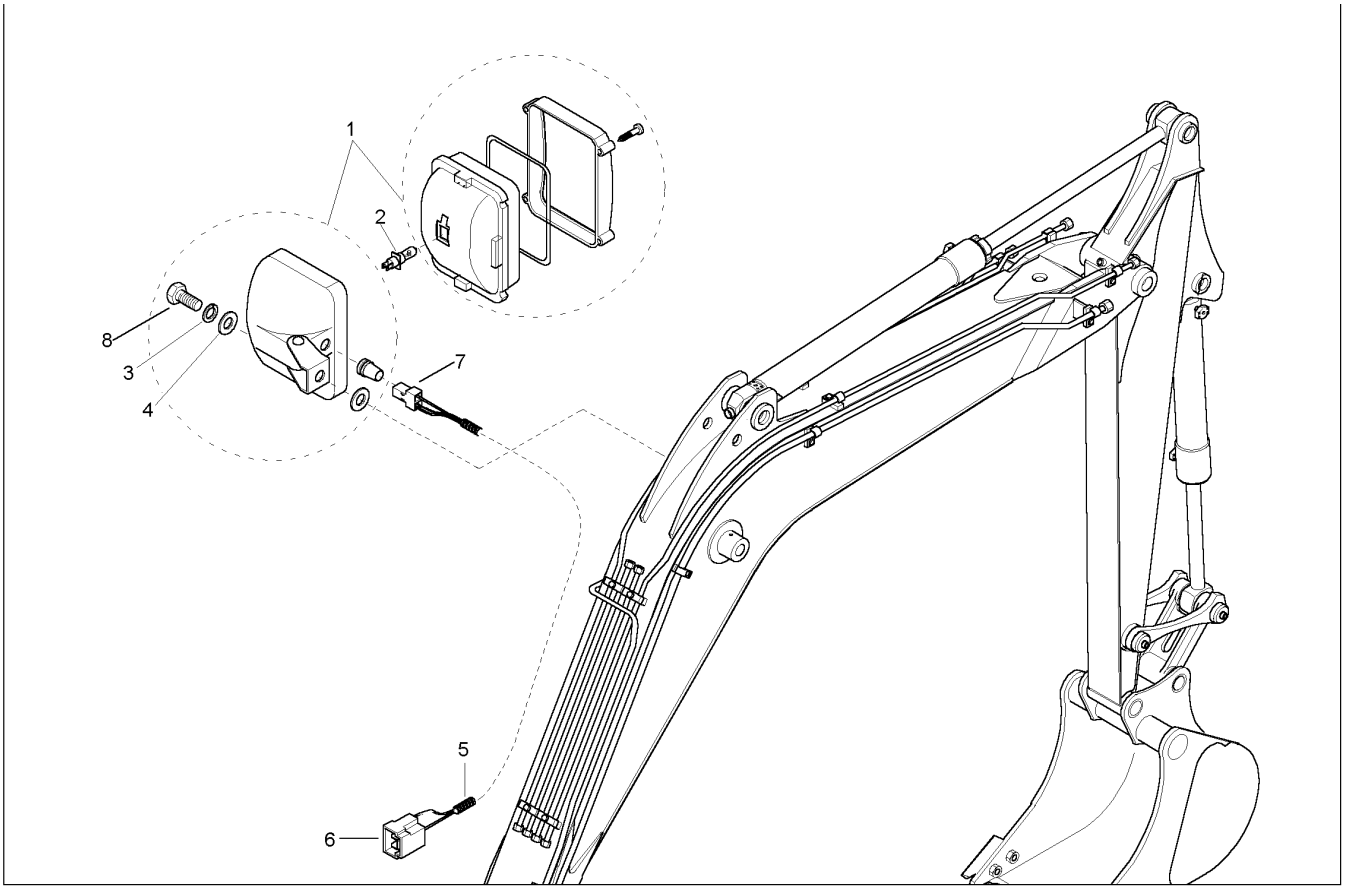

Ref. No.	Part No.	Description	Qty. Req.	Ref. No.	Part No.	Description	Qty. Req.
01	160951	WORKING LIGHT	1	05	164275	HARNESS WIRING	1
02	160952	LAMP	1	06	162002	PLUG	1
03	161669	RING/SNAP S10	1	07	162852	CONNECTOR	1
04	161640	WASHER/GR A 10.5 ZO	2	08	651391	CS M10–1.5 X 20 C 8.8	1

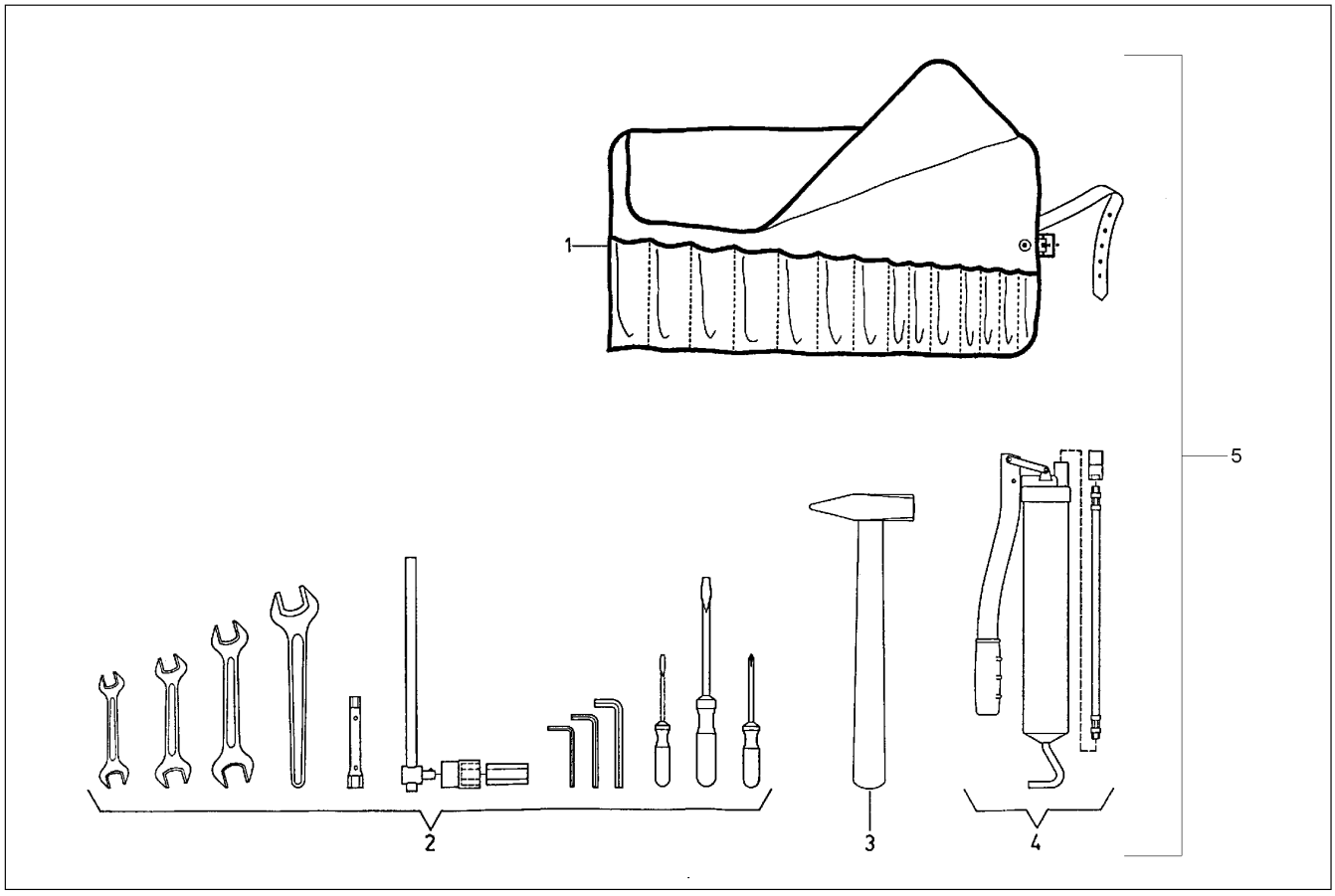

Ref. No.	Part No.	Description	Qty. Req.
01	161989	TOOL BAG	1
02	161990	SCREW DRIVERS & FLAT SPANNERS	1
03	161991	HAMMER	1
04	161992	GREASE GUN	1
05	161988	TOOL KIT	1

Index

A

Air cleaner, 52
Auxiliary hydraulics valve, 74

B

Boom arm, 26
Boom cylinder, 75
Boom offset cylinder, 79
Bottom roller, 9
Bucket cylinder, 77

C

Cabin 3, 31
Cabin door, 36
Cabin frame, 29
Cabin frame 2, 30
Cabin mats, 37
Cabin Windows, 34
Chassis covers, 18
Connecting link, 28
Counterweight, 22

D

Decal Locations, 2–7, 154–155
Dipper arm, 27
Dipper cylinder, 76
Distribution block, 70
Double control valve, 65
Dozer blade, 16
Dozer cylinder, 78
Dozer valve, 73

E

Electrical
- Battery & mount, 95
- Boom work light, 102
- Chassis harness, 97
- Engine harness, 96
- Left armrest, 98
- Lights, 101
- Relay plate, 100
- Right armrest, 99

Engine
- Alternator & starter, 43
- Fan, water pump & thermostat, 41
- Fuel injection system, 46
- Gasket set & hone, 42
- Oil filter & pan, 44

Exhaust, 53

F

Fuel pump, 48
Fuel tank, 45

H

Hand controls, 71
Hand throttle, 49
Heater, 38
Heater box, 40
Hood, 23
Hoses
- Auxiliary hydraulics, 87
- Boom, 90
- Boom cylinders, 91
- Boom offset cylinder, 85
- Check valves, 89
- Control valve return lines, 84
- Dipper arm, 92, 93
- Dozer blade cylinder, 86
- Hand controls, 88
- Hydraulic pump, 81
- Oil cooler, 80
- Stall load warning device, 94
- Swivel drive, 83
- Track drives, 82

Hydraulic oil tank, 55
Hydraulic pump, 56
Hydraulic pump drive, 54

L

Lubrication, 19

M

Main control valve, 62
Main wiring harness, 32
Motor mount, 50

P

Pilot supply unit, 66

R

Radiator, 51
Rear wall, 20

Index

S

Seat, 39
Selection valve, 68
Side cover, 21
Sliding side window, 35
Steel track, 10, 11, 14
Stop valve, 67
Swivel drive, 61
Swivel joint, 59
  breakdown, 60

T

Table Of Contents, 1
Tank cover, 25
Tool Kit, 103
Track drive, 58
Track tensioner, 12
  Rubber track, 15
Travel valve, 72

U

Undercarriage
  Rubber track, 13
  Steel tracks, 8
Upper carriage, 17

V

Valve, 69
Valve body cover, 24

W

Windshield, 33

Part No.	Page No.	Ref. No.	Part No.	Page No.	Ref. No.	Part No.	Page No.	Ref. No.	Part No.	Page No.	Ref. No.
119661	02	31	160891	100	06	161227	83	06	161416	08	32
122288	02	32	160893	02	35	161230	86	07	161416	13	32
122735	02	33	160945	08	37	161236	84	03	161416	16	08
135896	02	34	160945	13	37	161236	85	08	161416	28	09
160394	02	30	160948	55	09	161236	87	01	161417	08	30
160409	17	15	160949	55	19	161236	89	01	161417	13	30
160427	41	11	160950	48	04	161238	88	12	161419	78	24
160427	41	16	160951	102	01	161240	81	09	161419	79	12
160427	42	25	160952	102	02	161276	82	16	161420	17	13
160437	66	03	160989	33	21	161276	87	03	161422	17	14
160439	48	15	161057	22	04	161312	81	08	161422	19	06
160488	29	19	161058	21	19	161350	88	09	161422	75	25
160494	33	11	161059	45	02	161351	84	01	161422	76	32
160495	33	01	161061	21	17	161351	85	09	161422	77	26
160496	34	01	161061	23	14	161358	21	33	161422	92	22
160525	36	02	161061	24	33	161358	24	25	161423	38	18
160526	30	04	161062	21	24	161363	72	18	161423	61	09
160527	30	05	161062	22	05	161364	99	16	161424	38	19
160530	30	18	161062	24	16	161367	101	02	161425	61	07
160537	101	09	161064	21	14	161374	99	18	161426	55	10
160611	39	18	161064	23	11	161375	99	19	161426	57	14
160638	08	09	161064	24	30	161376	99	17	161426	59	04
160638	13	09	161077	38	01	161381	101	01	161426	65	04
160639	33	08	161084	29	12	161387	96	02	161426	66	04
160639	34	05	161085	29	10	161392	76	36	161426	68	10
160640	33	07	161086	29	14	161392	92	17	161426	69	05
160640	34	04	161087	29	17	161393	38	14	161426	93	07
160641	33	18	161096	36	05	161393	38	15	161427	66	05
160644	22	18	161102	38	22	161396	34	12	161427	68	09
160658	72	14	161103	100	08	161396	36	10	161428	45	09
160712	36	09	161104	45	10	161411	16	07	161429	55	11
160713	36	08	161113	50	06	161411	19	05	161429	61	10
160713	45	17	161142	17	06	161411	28	08	161430	45	08
160763	68	08	161155	70	06	161411	92	21	161430	66	06
160764	69	01	161156	67	01	161412	08	31	161431	55	13
160844	45	14	161165	79	04	161412	13	31	161433	51	12
160860	38	17	161170	79	05	161412	26	13	161433	55	08
160860	48	08	161174	60	12	161412	27	12	161433	70	05
160865	08	10	161204	23	09	161412	75	24	161443	55	37
160865	13	10	161204	24	02	161412	76	31	161443	57	15
160882	21	03	161206	17	12	161412	77	25	161443	62	12
160882	23	04	161217	79	06	161412	78	23	161443	63	06
160883	101	03	161220	82	10	161412	79	11	161443	65	16
160886	08	13	161223	85	06	161414	55	07	161443	68	14
160886	13	13	161223	86	08	161415	45	07	161443	88	04
160889	100	07	161225	86	06	161415	55	05	161443	93	06
									161443	94	06

Part No.	Page No.	Ref. No.	Part No.	Page No.	Ref. No.	Part No.	Page No.	Ref. No.	Part No.	Page No.	Ref. No.
161445	38	20	161585	65	15	161640	73	09	161661	24	36
161445	48	02	161586	57	08	161640	74	10	161661	49	06
161446	55	38	161586	94	28	161640	76	38	161661	53	29
161448	63	05	161589	27	11	161640	77	30	161661	66	09
161448	65	05	161589	28	14	161640	95	06	161663	08	20
161448	66	10	161610	25	16	161640	102	04	161663	13	20
161448	74	07	161611	20	04	161641	20	13	161663	24	27
161450	57	19	161613	38	31	161641	24	15	161663	25	09
161450	59	07	161614	101	04	161642	17	11	161663	51	14
161450	62	05	161615	38	08	161642	20	16	161665	48	14
161450	63	04	161615	39	33	161642	22	11	161666	24	38
161450	68	15	161616	18	10	161642	62	20	161666	51	07
161450	72	07	161616	20	33	161642	75	29	161666	100	11
161450	93	04	161616	21	11	161642	76	41	161666	101	07
161450	94	04	161616	25	10	161642	77	33	161667	18	08
161453	76	33	161618	33	10	161642	78	29	161667	20	32
161459	59	05	161618	39	21	161643	08	16	161667	21	29
161461	92	20	161619	20	07	161643	13	16	161667	24	09
161463	55	12	161621	22	08	161644	31	15	161667	25	13
161465	88	03	161623	94	23	161645	45	06	161667	38	07
161465	93	05	161624	57	03	161645	50	12	161667	39	36
161465	94	05	161624	70	10	161645	55	04	161667	51	19
161467	57	16	161626	20	09	161647	08	41	161668	31	08
161468	76	35	161627	17	16	161653	22	02	161668	33	09
161468	92	18	161627	22	19	161658	45	13	161669	08	19
161469	76	34	161629	31	02	161658	100	16	161669	13	19
161469	92	19	161632	100	17	161659	21	31	161669	20	12
161477	48	03	161634	39	40	161659	22	26	161669	24	14
161479	88	02	161635	08	35	161659	49	03	161669	25	08
161482	19	07	161635	13	35	161660	21	23	161669	47	65
161496	38	21	161635	57	06	161660	22	21	161669	49	27
161501	57	11	161637	08	07	161660	24	19	161669	50	08
161501	57	21	161637	08	22	161660	24	23	161669	51	24
161502	61	19	161637	13	07	161660	38	11	161669	54	04
161504	48	05	161637	13	22	161660	38	30	161669	55	23
161507	57	09	161640	08	23	161660	39	25	161669	62	17
161508	57	20	161640	13	23	161660	49	13	161669	65	03
161514	57	13	161640	25	18	161660	67	05	161669	72	09
161514	65	06	161640	39	30	161660	68	13	161669	73	08
161567	66	02	161640	47	66	161660	69	04	161669	74	09
161574	57	12	161640	49	28	161660	71	12	161669	102	03
161577	55	16	161640	50	09	161660	100	13	161670	17	10
161579	55	20	161640	54	05	161661	21	07	161670	20	15
161583	26	05	161640	55	24	161661	21	10	161670	22	10
161584	79	10	161640	55	29	161661	23	08	161670	45	05
161585	57	10	161640	72	10	161661	23	15	161670	50	11
									161670	55	03

Part No.	Page No.	Ref. No.	Part No.	Page No.	Ref. No.	Part No.	Page No.	Ref. No.	Part No.	Page No.	Ref. No.
161670	62	19	161844	31	03	162122	55	35	162791	20	02
161670	70	09	161848	39	22	162122	70	08	162794	22	17
161670	76	42	161921	29	05	162203	21	08	162795	29	13
161670	77	34	161923	29	08	162239	69	07	162796	29	15
161670	78	28	161929	21	28	162240	69	08	162797	29	03
161672	28	19	161929	22	15	162241	68	01	162798	29	21
161672	54	07	161929	24	24	162242	68	02	162807	31	04
161673	45	12	161941	33	06	162243	68	03	162812	34	07
161673	100	15	161949	30	03	162244	68	04	162813	36	15
161674	21	30	161965	02	01	162245	68	05	162824	02	16
161674	48	13	161966	02	02	162246	68	06	162825	02	17
161675	19	03	161967	02	03	162247	69	06	162832	02	18
161675	21	22	161969	02	04	162248	69	09	162835	38	13
161675	22	07	161970	02	05	162388	25	02	162836	99	20
161675	24	18	161974	36	21	162389	21	12	162839	29	28
161675	24	37	161981	02	06	162398	49	21	162849	97	02
161675	38	10	161982	02	07	162444	88	08	162851	96	03
161675	38	29	161985	02	08	162445	85	05	162852	102	07
161675	39	24	161986	02	09	162445	86	10	162859	93	18
161675	51	06	161987	02	10	162446	88	06	162859	94	18
161675	67	04	161988	103	05	162447	88	11	162860	24	28
161675	69	03	161989	103	01	162449	02	11	162860	100	09
161675	71	11	161990	103	02	162450	02	12	162864	36	03
161675	100	10	161991	103	03	162451	02	13	162868	33	14
161675	101	06	161992	103	04	162452	02	14	162924	29	24
161676	08	29	162002	102	06	162453	02	15	162924	30	10
161676	13	29	162006	29	26	162494	65	08	162924	31	20
161676	18	07	162015	38	04	162504	45	16	162925	36	18
161676	20	31	162016	23	17	162504	47	59	162928	26	14
161676	21	06	162017	51	04	162601	33	19	162928	27	13
161676	23	07	162018	30	02	162602	33	02	162929	45	19
161676	24	08	162018	34	09	162603	33	03	162957	85	07
161676	24	35	162022	47	67	162604	21	26	162957	86	09
161676	25	12	162022	49	29	162604	22	13	162960	82	15
161676	38	06	162022	94	24	162604	24	21	163001	55	34
161676	39	07	162027	72	16	162605	38	03	163062	90	06
161676	51	23	162027	73	13	162607	29	22	163063	75	28
161676	53	15	162029	30	06	162675	21	04	163063	90	07
161677	20	06	162033	33	04	162675	23	05	163068	08	33
161691	20	08	162035	30	22	162716	21	02	163068	13	33
161722	19	01	162036	31	05	162716	23	03	163068	59	01
161728	39	05	162045	49	17	162716	24	39	163071	78	32
161730	39	16	162062	48	07	162737	29	25	163074	17	08
161732	97	03	162064	38	16	162738	39	04	163082	90	01
161764	72	15	162064	48	09	162751	12	13	163090	92	08
161764	73	12	162072	21	09	162751	15	13	163098	70	01
									163115	57	17

Part No.	Page No.	Ref. No.	Part No.	Page No.	Ref. No.	Part No.	Page No.	Ref. No.	Part No.	Page No.	Ref. No.
163115	59	09	163364	67	02	164127	09	05	164159	12	04
163116	57	18	163365	70	04	164128	09	04	164159	15	04
163157	20	19	163366	70	02	164129	09	02	164160	12	03
163164	25	01	163367	65	14	164130	09	01	164160	15	03
163177	10	02	163373	91	05	164131	10	11	164161	12	02
163178	09	03	163373	92	04	164132	10	08	164161	15	02
163178	10	03	163375	79	09	164133	10	01	164162	12	01
163179	10	04	163376	90	08	164134	11	10	164163	12	20
163182	10	07	163377	76	43	164135	11	09	164163	15	20
163184	10	09	163377	77	35	164136	11	08	164164	15	18
163185	10	10	163377	90	09	164137	11	07	164165	15	01
163205	16	05	163379	91	06	164138	11	06	164166	14	02
163209	81	02	163379	92	03	164139	11	05	164167	14	03
163211	62	14	163379	93	20	164140	11	04	164168	14	04
163288	88	01	163379	94	27	164141	11	03	164169	14	05
163292	81	05	163634	39	08	164142	11	02	164170	14	06
163299	82	01	163918	81	06	164143	11	01	164171	14	07
163304	85	04	163973	02	19	164144	12	21	164172	14	08
163310	83	01	163974	02	20	164144	15	21	164173	14	09
163319	92	10	163975	02	21	164145	12	19	164174	14	10
163322	92	05	163976	02	22	164145	15	19	164175	14	11
163323	91	09	163977	02	23	164146	12	18	164176	14	12
163324	91	07	163978	02	24	164147	12	17	164177	08	24
163327	92	06	163979	02	25	164147	15	17	164178	08	25
163335	82	11	163980	02	26	164148	12	16	164179	13	24
163335	87	04	164110	13	05	164148	15	16	164180	13	25
163338	30	25	164111	08	27	164149	12	15	164181	29	16
163343	45	11	164111	13	27	164149	15	15	164182	29	20
163345	24	32	164112	08	26	164150	12	14	164184	31	12
163348	19	04	164112	13	26	164150	15	14	164185	31	13
163348	49	24	164113	08	17	164151	12	12	164187	29	27
163349	17	05	164113	13	17	164151	15	12	164188	30	20
163351	70	07	164114	13	11	164152	12	11	164188	31	19
163352	78	30	164114	14	01	164152	15	11	164189	55	18
163352	79	08	164115	13	08	164153	12	10	164190	08	04
163354	78	31	164116	08	08	164153	15	10	164190	13	04
163354	79	13	164117	13	03	164154	12	09	164190	58	01
163355	59	08	164118	08	05	164154	15	09	164191	58	07
163356	59	06	164119	08	11	164155	12	08	164192	58	08
163356	61	17	164120	08	03	164155	15	08	164193	55	17
163357	59	03	164121	09	11	164156	12	07	164194	60	08
163358	59	02	164122	09	10	164156	15	07	164195	58	06
163359	62	07	164123	09	09	164157	12	06	164196	58	05
163359	70	03	164124	09	08	164157	15	06	164197	17	23
163360	65	07	164125	09	07	164158	12	05	164198	20	01
163364	65	09	164126	09	06	164158	15	05	164199	20	05
									164200	45	01

Part No.	Page No.	Ref. No.	Part No.	Page No.	Ref. No.	Part No.	Page No.	Ref. No.	Part No.	Page No.	Ref. No.
164201	55	01	164242	13	14	164300	49	18	164340	52	08
164202	25	06	164243	11	11	164301	49	07	164341	44	07
164203	25	04	164244	10	05	164302	49	14	164342	53	02
164204	25	03	164245	10	06	164303	49	11	164343	53	06
164205	25	05	164248	71	17	164304	49	04	164344	53	08
164206	21	01	164249	71	16	164305	38	34	164345	53	10
164207	22	16	164259	29	29	164306	52	06	164346	53	11
164208	24	06	164260	29	01	164307	52	07	164347	53	12
164209	20	18	164261	31	06	164308	42	09	164348	42	13
164210	25	20	164262	31	09	164309	41	05	164348	53	03
164211	25	19	164263	37	11	164310	51	02	164349	42	15
164212	17	01	164264	37	12	164311	51	28	164349	53	09
164213	18	01	164265	100	01	164312	42	33	164350	53	01
164214	18	02	164266	100	02	164313	44	15	164351	53	05
164215	18	04	164267	100	03	164314	42	02	164352	53	04
164216	18	05	164269	49	01	164315	44	05	164353	42	16
164217	18	03	164273	95	07	164316	43	10	164353	53	18
164218	24	01	164274	95	08	164316	44	06	164354	53	19
164219	23	01	164275	97	05	164316	52	11	164355	53	20
164220	55	15	164275	102	05	164317	42	34	164356	53	16
164221	22	01	164276	100	04	164317	44	10	164357	53	17
164222	18	09	164277	93	19	164318	44	04	164358	44	14
164223	24	12	164277	94	26	164319	42	03	164359	44	13
164224	24	11	164278	100	05	164319	44	08	164360	41	01
164225	24	10	164279	96	01	164320	42	11	164361	41	03
164226	95	02	164280	97	01	164320	53	26	164362	41	02
164227	95	03	164281	99	01	164321	42	12	164363	41	18
164228	95	04	164282	98	01	164321	53	27	164364	41	19
164229	20	35	164283	98	02	164322	52	01	164364	42	19
164230	20	36	164284	97	04	164323	52	02	164365	41	17
164231	55	26	164285	99	02	164324	52	15	164365	42	20
164232	55	36	164286	98	03	164325	52	14	164366	46	05
164233	55	25	164287	100	22	164326	52	12	164367	47	53
164234	55	27	164288	52	16	164327	52	10	164368	47	54
164235	16	01	164289	51	10	164328	52	04	164369	47	47
164236	08	01	164290	51	08	164329	52	03	164370	47	49
164236	13	01	164291	50	05	164330	41	12	164371	47	50
164237	08	21	164292	50	02	164331	53	25	164372	47	52
164237	13	21	164293	50	01	164332	53	24	164373	47	51
164238	08	38	164294	50	04	164333	42	10	164374	43	01
164239	08	40	164295	53	13	164334	53	21	164375	43	02
164240	08	39	164296	51	03	164335	52	13	164376	43	03
164241	08	02	164297	50	03	164336	53	23	164377	43	04
164241	13	02	164298	47	63	164337	52	09	164378	43	06
164241	17	17	164298	49	25	164338	52	05	164379	43	07
164242	08	14	164299	20	34	164339	53	28	164380	43	08
									164381	43	09

Part No.	Page No.	Ref. No.	Part No.	Page No.	Ref. No.	Part No.	Page No.	Ref. No.	Part No.	Page No.	Ref. No.
164382	43	13	164422	47	44	164464	78	20	164503	71	04
164383	43	14	164423	46	36	164465	79	01	164504	71	08
164384	43	12	164424	46	37	164466	51	01	164505	71	03
164385	43	11	164425	46	38	164467	90	02	164506	71	05
164386	42	01	164426	46	39	164468	90	03	164507	71	07
164387	41	25	164427	46	40	164469	90	05	164508	71	06
164387	42	04	164428	47	56	164470	90	04	164509	72	02
164388	42	05	164429	47	55	164471	57	01	164509	73	02
164389	42	08	164430	46	03	164472	92	02	164509	74	02
164390	42	17	164431	41	08	164473	92	01	164510	72	03
164391	41	09	164432	41	04	164474	91	03	164510	73	03
164391	42	18	164433	41	06	164475	92	09	164510	74	03
164392	42	21	164434	41	07	164476	91	01	164511	73	04
164392	47	43	164435	41	13	164477	75	26	164511	74	04
164393	42	22	164436	41	24	164478	77	29	164512	73	05
164393	46	22	164437	41	23	164479	76	37	164512	74	05
164394	42	24	164438	41	22	164480	55	31	164513	72	04
164395	42	26	164439	41	21	164481	62	13	164514	72	05
164396	42	28	164440	41	14	164482	51	21	164515	64	09
164397	42	32	164441	41	15	164483	51	20	164516	64	05
164398	47	46	164442	41	20	164484	93	12	164517	64	11
164399	46	04	164443	43	19	164484	94	12	164518	64	02
164400	46	07	164444	43	18	164485	93	11	164519	64	03
164401	46	08	164445	43	20	164485	94	11	164520	64	04
164402	46	09	164446	43	15	164486	94	21	164521	64	13
164402	46	12	164447	43	16	164487	91	04	164522	64	07
164403	46	10	164448	43	17	164488	91	02	164523	64	10
164404	46	11	164449	47	68	164489	56	01	164524	64	06
164405	46	26	164450	44	01	164490	62	01	164525	64	12
164406	46	13	164451	27	16	164490	63	07	164526	64	14
164406	46	24	164452	27	17	164490	64	01	164527	56	04
164407	46	14	164453	27	01	164491	65	01	164528	56	06
164408	46	16	164454	28	01	164492	71	01	164529	56	07
164409	46	18	164455	28	03	164493	71	02	164530	56	02
164410	46	21	164456	28	02	164494	72	01	164531	56	03
164411	46	23	164457	26	01	164495	54	02	164532	56	05
164412	46	25	164458	17	02	164496	54	01	164533	61	11
164413	46	27	164459	28	20	164497	73	01	164534	94	20
164414	46	28	164460	27	18	164497	74	01	164535	71	13
164415	46	29	164461	28	17	164498	93	01	164535	72	17
164416	46	30	164461	77	27	164498	94	01	164535	73	14
164417	46	31	164462	27	14	164499	17	20	164535	74	11
164418	46	32	164462	76	30	164499	61	01	164536	94	19
164419	46	33	164463	26	15	164500	66	01	164537	66	11
164420	46	35	164463	75	31	164501	81	01	164538	65	11
164421	47	45	164464	16	09	164502	63	03	164539	65	12
									164540	61	02

Part No.	Page No.	Ref. No.	Part No.	Page No.	Ref. No.	Part No.	Page No.	Ref. No.	Part No.	Page No.	Ref. No.
164541	61	04	164572	75	14	164602	77	24	164646	17	28
164542	61	12	164572	77	14	164603	77	12	164646	51	26
164543	61	13	164573	75	15	164604	78	04	164647	17	27
164544	61	14	164573	77	15	164605	78	05	164648	51	25
164545	61	20	164574	75	16	164606	78	07	164649	61	03
164546	63	08	164574	77	16	164607	78	08	164650	61	05
164547	64	08	164575	75	17	164608	78	09	164651	49	05
164548	61	21	164575	77	17	164609	78	01	164652	02	00
164549	75	01	164576	75	18	164610	78	02	164653	75	32
164550	75	02	164576	77	18	164611	78	19	164653	77	28
164551	75	33	164577	75	19	164612	75	03	164654	76	27
164552	76	01	164577	77	19	164612	77	03	164655	78	25
164553	76	02	164578	75	20	164613	76	03	164659	72	13
164554	76	26	164578	77	20	164614	78	03	164660	72	12
164555	77	01	164579	75	21	164615	78	12	164661	73	11
164556	77	02	164579	77	21	164616	56	08	164662	44	09
164557	77	22	164580	76	04	164617	56	09	164663	47	48
164558	79	02	164581	76	05	164618	56	10	164664	46	15
164559	79	03	164582	76	06	164619	16	02	164665	46	17
164560	75	04	164583	76	07	164620	27	08	164666	42	29
164560	77	04	164584	76	08	164621	27	02	164667	21	35
164560	78	06	164585	76	09	164622	28	10	164667	22	27
164561	75	05	164586	76	10	164623	28	04	164667	24	41
164561	77	05	164587	76	12	164624	28	05	164668	22	24
164562	75	06	164588	76	13	164625	26	09	164669	39	01
164562	77	06	164589	76	14	164626	26	10	164670	30	17
164563	75	07	164589	78	10	164627	26	02	164670	40	04
164563	77	07	164590	76	15	164628	26	08	164671	34	03
164564	75	22	164590	78	11	164629	17	04	164672	34	06
164564	76	28	164591	76	16	164630	28	06	164673	29	18
164564	78	21	164591	78	13	164631	17	07	164674	29	09
164565	75	23	164592	76	17	164632	27	15	164674	36	19
164565	76	29	164592	78	14	164632	28	13	164675	30	01
164565	78	22	164593	76	18	164633	20	21	164676	29	02
164566	75	08	164593	78	15	164634	20	27	164677	29	04
164566	77	08	164594	76	19	164635	20	26	164678	29	07
164567	75	09	164594	78	16	164636	20	25	164679	30	07
164567	77	09	164595	76	20	164637	23	02	164680	30	08
164568	75	10	164595	78	17	164638	20	24	164681	30	11
164568	77	10	164596	76	21	164639	20	23	164682	31	17
164569	75	11	164596	78	18	164640	20	22	164683	29	30
164569	76	11	164597	76	22	164641	20	28	164684	35	02
164569	77	11	164598	76	23	164642	20	29	164685	99	06
164570	75	12	164599	76	24	164643	78	26	164686	30	12
164571	75	13	164600	76	25	164644	17	25	164687	32	03
164571	77	13	164601	77	23	164645	51	27	164688	36	23
									164689	36	20

Part No.	Page No.	Ref. No.	Part No.	Page No.	Ref. No.	Part No.	Page No.	Ref. No.	Part No.	Page No.	Ref. No.
164689	37	09	164732	37	01	164778	42	27	164818	86	03
164690	22	23	164733	36	13	164779	42	31	164819	85	01
164691	31	25	164734	37	06	164780	60	09	164820	81	03
164691	33	12	164735	37	07	164781	60	10	164822	83	07
164692	99	13	164736	37	02	164782	60	07	164823	86	02
164693	99	14	164738	29	11	164783	60	11	164824	86	04
164694	99	15	164739	29	31	164784	60	03	164825	86	05
164695	99	03	164740	29	32	164785	60	02	164826	85	03
164696	30	16	164741	30	14	164786	60	01	164827	47	61
164697	99	07	164742	30	19	164787	60	05	164828	85	02
164698	21	34	164743	30	21	164788	65	13	164829	91	08
164698	22	22	164744	31	23	164789	19	08	164830	92	12
164698	24	40	164744	33	16	164790	84	05	164831	92	13
164699	39	02	164744	34	15	164790	88	14	164832	82	06
164700	36	06	164744	35	04	164791	88	13	164833	82	07
164701	36	07	164745	31	24	164792	84	04	164834	82	08
164704	42	06	164745	33	17	164792	88	16	164835	91	10
164705	42	07	164745	34	16	164793	84	06	164836	83	03
164706	68	07	164745	35	05	164794	82	13	164837	82	03
164707	39	03	164746	31	10	164795	88	07	164838	85	10
164708	99	11	164747	32	01	164796	82	12	164839	83	04
164709	99	09	164748	32	02	164797	88	15	164840	92	14
164710	99	23	164749	34	02	164798	88	05	164841	92	15
164711	49	20	164750	34	11	164799	88	10	164842	83	02
164712	49	19	164751	34	13	164800	87	02	164843	57	04
164713	21	25	164752	34	17	164801	93	14	164843	81	10
164713	22	12	164753	34	18	164801	94	14	164844	92	11
164713	24	20	164754	37	10	164802	82	05	164845	80	01
164714	45	03	164755	37	13	164803	82	04	164846	92	16
164715	42	30	164756	40	01	164804	84	02	164847	80	02
164716	42	23	164757	40	02	164805	93	17	164848	02	29
164716	47	41	164758	40	03	164805	94	17	164848	81	11
164716	47	42	164759	36	01	164806	83	05	164849	82	14
164717	46	19	164760	36	11	164807	93	15	164850	80	03
164717	46	20	164761	36	24	164807	94	15	164851	51	13
164717	46	34	164762	37	03	164808	93	16	164853	02	27
164718	46	02	164763	37	05	164808	94	16	164854	02	28
164719	44	03	164764	37	04	164809	94	25	164854	33	20
164724	38	26	164765	37	08	164810	81	07	164855	30	27
164725	38	24	164770	33	13	164811	47	58	164862	30	26
164726	38	27	164771	29	06	164812	47	60	164862	36	22
164727	38	25	164772	34	10	164813	81	04	164863	48	06
164728	46	06	164774	30	23	164814	82	02	164864	65	10
164729	24	04	164775	31	01	164815	82	09	164865	17	26
164730	24	03	164776	31	18	164816	61	06	164867	100	21
164731	38	02	164777	35	01	164817	86	01	164868	99	21
									164869	93	02

GE1202 - NUMERICAL INDEX

Part No.	Page No.	Ref. No.	Part No.	Page No.	Ref. No.	Part No.	Page No.	Ref. No.	Part No.	Page No.	Ref. No.
164869	94	02	164911	94	09	164945	72	06	651391	13	15
164870	93	03	164912	17	21	164945	73	06	651391	24	13
164870	94	03	164913	68	11	164945	74	06	651391	50	13
164871	99	25	164914	100	20	164946	62	09	651391	62	16
164872	99	26	164915	49	22	164947	61	18	651391	72	08
164873	95	01	164916	20	37	164948	61	16	651391	73	07
164878	99	05	164917	26	07	164949	47	62	651391	74	08
164879	99	22	164917	27	07	164950	47	57	651391	102	08
164880	38	33	164917	28	12	164951	58	02	651393	20	11
164881	99	08	164918	95	05	164952	55	32	651393	25	15
164882	99	10	164919	17	19	164953	51	29	651393	55	22
164883	99	12	164920	17	22	164954	71	14	651393	72	11
164884	99	24	164921	45	15	164955	71	15	651393	73	10
164889	99	04	164922	26	04	164956	26	03	651395	08	34
164890	38	12	164922	27	04	164957	27	03	651395	13	34
164890	38	23	164923	27	10	164958	27	09	651396	24	26
164891	48	10	164923	28	16	164958	28	15	651396	25	07
164891	48	11	164924	45	18	164959	28	07	651396	54	03
164892	88	17	164924	55	14	164960	16	03	651396	62	15
164893	31	22	164925	55	33	164961	17	03	651402	25	14
164893	33	15	164926	61	08	164962	38	28	651403	31	14
164893	34	14	164927	62	11	164963	51	09	651404	20	17
164893	35	03	164928	54	08	164964	52	17	651404	90	10
164894	37	14	164929	62	10	164965	49	08	651405	17	09
164895	49	23	164930	48	01	164966	55	30	651405	20	14
164896	19	09	164931	62	21	164967	16	04	651406	50	10
164897	94	22	164932	58	03	164968	27	05	651408	50	14
164898	49	02	164933	62	06	164969	39	10	651408	90	11
164899	79	07	164934	55	21	164970	39	11	651409	90	12
164900	08	12	164935	62	04	164971	39	12	651411	20	20
164900	08	42	164935	62	08	164972	39	13	651420	22	03
164900	13	12	164936	62	03	164973	39	14	651422	21	13
164901	26	06	164937	58	04	164974	39	15	651424	36	14
164901	27	06	164937	63	01	164975	39	19	651424	38	09
164901	28	11	164938	62	02	164976	39	20	651424	38	32
164902	26	11	164938	63	02	164977	39	27	651425	30	09
164903	49	09	164939	94	07	164978	39	28	651426	49	12
164904	36	16	164940	57	07	164979	39	29	651427	69	02
164905	55	06	164941	93	08	164980	39	32	651432	25	17
164906	49	15	164941	94	08	164981	39	34	651433	22	20
164907	30	13	164942	93	13	164982	39	35	651445	48	16
164908	100	14	164942	94	13	164983	40	05	651446	39	39
164909	17	18	164943	92	07	164984	40	06	651448	24	29
164910	08	36	164944	92	23	164985	40	07	651448	36	12
164910	13	36	164945	61	15	164986	39	09	651448	39	31
164911	93	09	164945	71	09	651391	08	15	651448	51	15
									651448	75	27

Part No.	Page No.	Ref. No.	Part No.	Page No.	Ref. No.	Part No.	Page No.	Ref. No.	Part No.	Page No.	Ref. No.
651448	76	39	651487	08	18	656017	76	40	656105	20	39
651448	77	31	651487	13	18	656017	77	32	656105	66	07
651449	16	06	651494	28	18	656047	22	14	656110	39	37
651449	31	16	651497	08	06	656047	49	10	656110	66	08
651449	50	15	651497	13	06	656047	100	19	656110	93	10
651451	26	12	651497	54	06	656048	34	08	656110	94	10
651456	36	17	651501	101	08	656048	39	38	656116	21	16
651457	21	27	651502	20	10	656048	49	16	656116	23	13
651457	24	22	651503	48	12	656048	53	14	656122	22	09
651457	30	15	651505	22	25	656092	30	24	656148	57	02
651457	31	21	651507	71	10	656092	39	23	656149	21	21
651457	68	12	651507	100	12	656092	51	05	656149	22	06
651458	31	11	651509	19	02	656092	100	18	656149	24	17
651458	36	04	651515	08	28	656093	20	30	656149	29	23
651458	39	17	651515	13	28	656093	21	18	656149	101	05
651459	21	15	651517	39	26	656093	23	16	656172	67	03
651459	23	12	656001	18	06	656093	24	34	425–36172	51	17
651459	24	31	656001	20	38	656093	31	07	425–36171	51	16
651460	20	03	656001	21	20	656093	38	05	425–36131	53	22
651461	71	18	656001	25	11	656093	51	18	425–36121	44	02
651466	33	05	656001	39	06	656094	21	05	425–36117	43	05
651473	47	64	656001	51	22	656094	23	06	425–36115	46	01
651473	49	26	656016	62	18	656094	24	07	425–36085	44	12
651475	50	07	656016	78	27	656100	21	32	425–34683	41	10
651475	65	02	656017	45	04	656100	23	10	425–34652	42	14
651476	57	05	656017	55	02	656100	24	05	425–34652	53	07
651480	55	28	656017	75	30	656102	51	11	425–34635	44	11
651483	17	24									

NOTES

TORQUE SPECIFICATIONS

NOTE: *Use these torque values when tightening **GEHL** hardware (excluding: Locknuts and Self-tapping, Thread Forming and Sheet Metal Screws) unless specified otherwise.*

All torque values are in Lb-Ft except those marked with an * which are Lb-In
(For metric torque value Nm, multiply Lb-Ft value by 1.355 or Lb-In value by 0.113)
(To convert Nm to Lb–Ft multiply by 0.738)

Unified National Thread	Grade 2		Grade 5		Grade 8	
	Dry	Lubed	Dry	Lubed	Dry	Lubed
8-32 **8-36**	19* 20*	14* 15*	30* 31*	22* 23*	41* 43*	31* 32*
10-24 **10-32**	27* 31*	21* 23*	43* 49*	32* 36*	60* 68*	45* 51*
1/4-20 **1/4-28**	66* 76*	50* 56*	9 10	75* 86*	12 14	9 10
5/16-18 **5/16-24**	11 12	9	17 19	13 14	25	18 20
3/8-16 **3/8-24**	20 23	15 17	30 35	23 25	45 50	35
7/16-14 **7/16-20**	32 36	24 27	50 55	35 40	70 80	55 60
1/2-13 **1/2-20**	50 55	35 40	75 90	55 65	110 120	80 90
9/16-12 **9/16-18**	70 80	55 60	110 120	80 90	150 170	110 130
5/8-11 **5/8-18**	100 110	75 85	150 180	110 130	220 240	170 180
3/4-10 **3/4-16**	175 200	130 150	260 300	200 220	380 420	280 320
7/8-9 **7/8-14**	170 180	125 140	430 470	320 360	600 660	460 500
1-8 **1-14**	250 270	190 210	640 710	480 530	900 1000	680 740
Metric Course Thread	**Grade 8.8**		**Grade 10.9**		**Grade 12.9**	
	Dry	**Lubed**	**Dry**	**Lubed**	**Dry**	**Lubed**
M6-1	8	6	11	8	13.5	10
M8-1.25	19	14	27	20	32.5	24
M10-1.5	37.5	28	53	39	64	47
M12-1.75	65	48	91.5	67.5	111.5	82
M14-2	103.5	76.5	145.5	108	176.5	131
M16-2	158.5	117.5	223.5	165.5	271	200

Gehl Company 143 Water Street, P.O. Box 179, West Bend, WI 53095-0179, U.S.A.

908171/AP0701

©2001 GEHL Company. All rights reserved.

Printed in U.S.A.