HL 2500 LOADER

Service Parts Manual

Form No.
901213
Replaces
620394

GEHL COMPANY

Mr. Dealer:

Give complete information when ordering service parts. Always give complete part number and also complete part description. The model number and serial number should always be given. Numbers for the HL2500 are stamped on a plate located on Left side of the Upper Frame Cross Member. LT3030 numbers are located on the Right Drawbar Member.

"Right" and "Left" are determined from a position sitting on the Seat and looking forward. From this position, the Ignition Starter Switch is on the right. "Front" is the leading side and "Rear" is the trailing side when the unit is traveling forward.

Gehl Company reserves the right to make changes or improvements in the design or construction of any part without incurring the obligation to install such changes on any unit previously delivered.

Table of Contents

	Page
Introduction	2
Decal Locations	3
Main Frame	4-5
Engine	6
Console and Controls	7
Axle and Drive	8-9
Transmission	10
Load Arms	11
Hydraulic System	12-13
Electrical System	14
OPTIONAL ATTACHMENTS	15-22
Actuator	23
Trailer	24-25
Trailer Wiring	26
Hydraulic Cylinders	27-28
Hydraulic Gear Pump	28
Lift and Tilt Valve	29
Hydraulic Control Valve	30
Hydrostatic Transmission - Right	31
Hydrostatic Transmission - Left	32
Numerical Index	33-35

Parts lists in this manual contain various abbreviations. Below is an explanation of these abbreviations.

HN - Hexagon Nut
HJN - Hexagon Jam Nut
HLN - Hexagon Lock Nut
SN - Slotted Nut
CN - Castellated Nut
WN - Wing Nut

PW - Plain Washer
LW - Lock Washer
ILW - Internal Tooth Lock Washer
ELW - External Tooth Lock Washer

L.H. - Left-Hand Thread
NF - National Fine Thread
S-L - Self-Locking
DPT - Double Pitch Tooth

Decal locations are shown to assist in application of new decals in the event of damage to the decal or refinishing of the machine. Check below for their locations.

Surfaces must be free from dirt, dust, grease and other foreign material before applying decals. To apply decals, remove the smaller portion of the decal backing paper and apply this part of the exposed adhesive backing to the clean surface in respective position. Peel other portion of the backing paper off slowly and apply decal.

The Decal Set Number for HL2500 is 600251. The set includes the following Decals:

1	**-**	**045698**	**Gehl 3 x 16 (Three Places)**
2	**-**	**052141**	**2500 (Two Places)**
3	**-**	**053753**	**Console - Warning**
4	**-**	**047977**	**Caution**
5	**-**	**053354**	**Be Careful (Two Places)**
6	**-**	**052007**	**Carry Load Low**
7	**-**	**052433**	**Gasoline**
8	**-**	**052434**	**Hydraulic Oil**

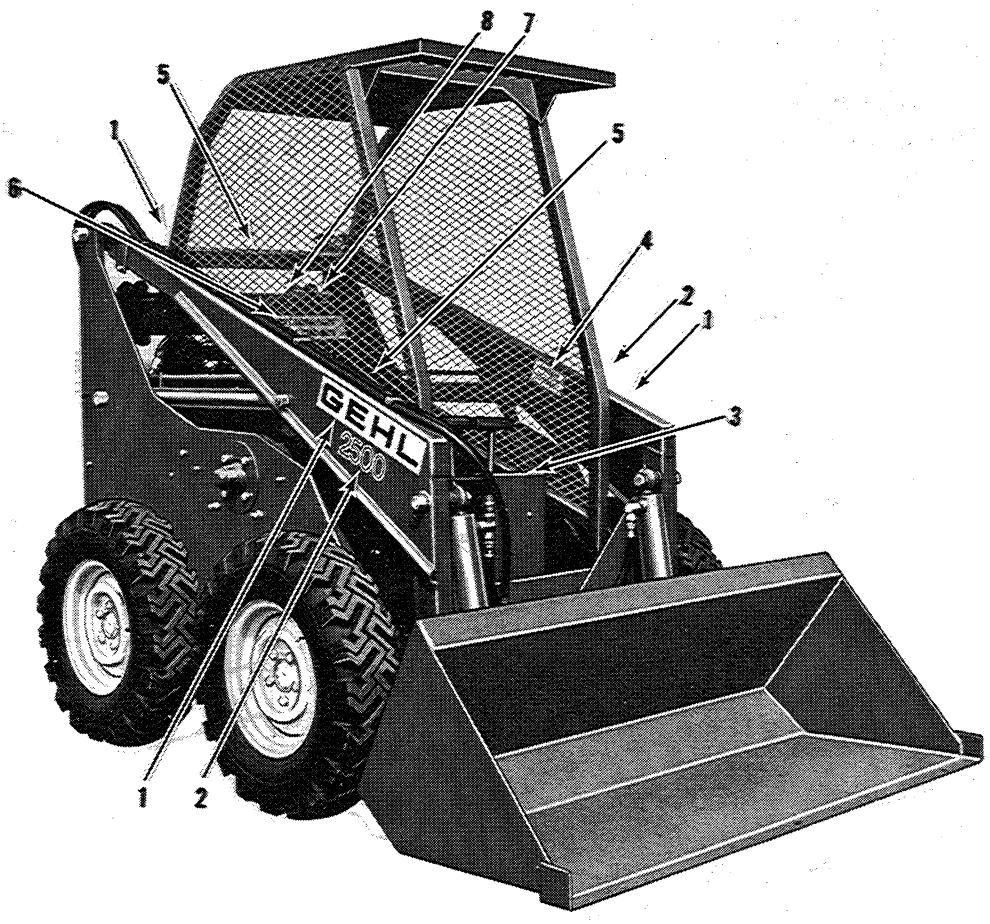

NOTE: Always order decals by set number. DO NOT order decals separately.

IMPORTANT: Always observe safety rules shown on decals.

WARNING - Order By Part Number - Do Not Use Illustration Reference Numbers

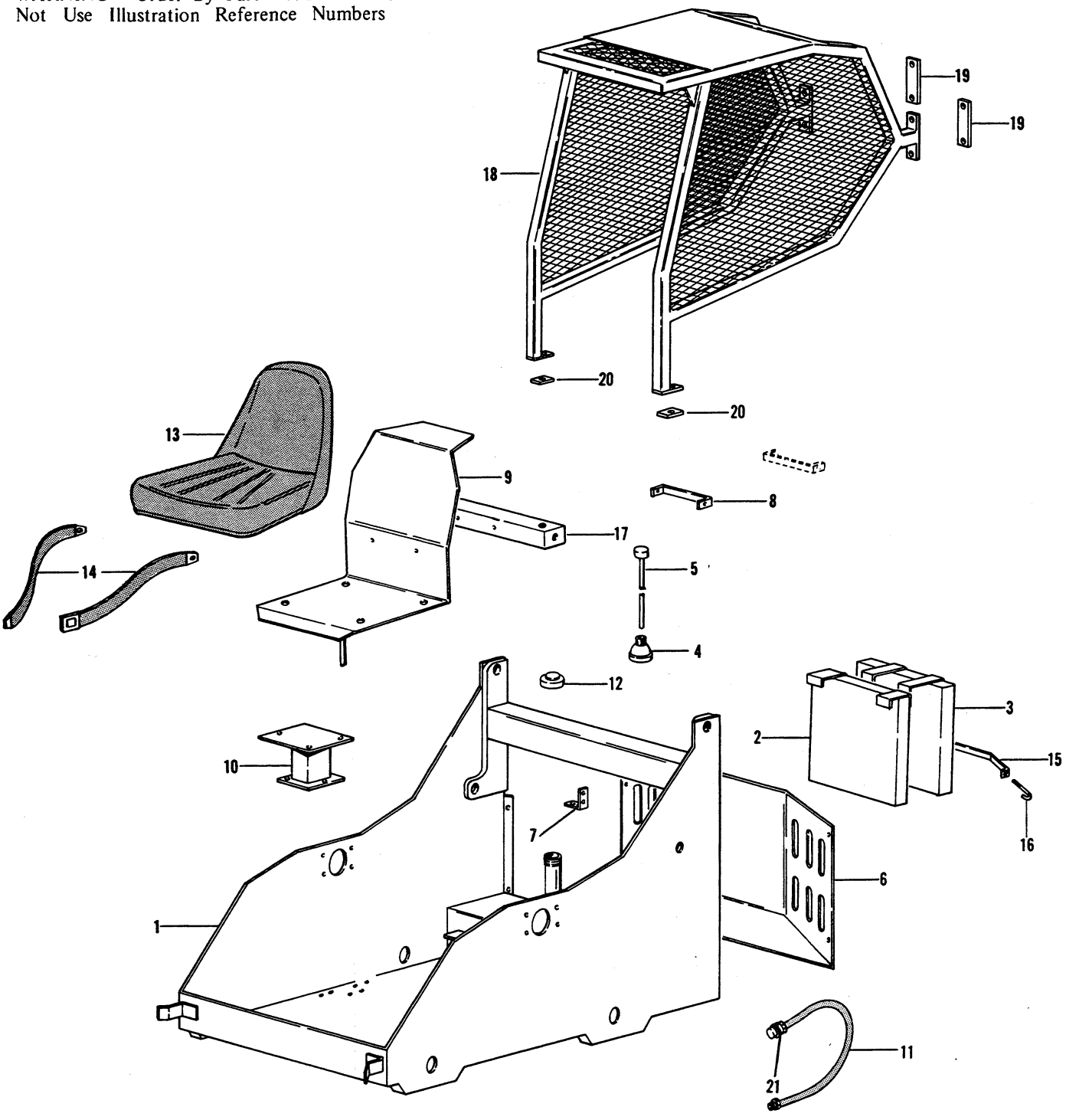

ALWAYS GIVE MODEL AND SERIAL NUMBER WHEN ORDERING SERVICE PARTS

Ref. No.	Part No.	Part Name	No. Req.
1	600420	Main Frame	1
	650250	Sq. Hd. Set Screw 1/2 x 3	1
	650252	Sq. Hd. Set Screw 1/2 x 4	2
	652139	Carriage Bolt 1/2 x 1-1/2 Gr. 5	4
		(4) 1/2 HN 653018 - (4) 1/2 HJN 653044	
		(4) 3/8 PW 654009	
	650517	Hex. Countersunk Pipe Plug 1/4	2
	660080	Hex. Countersunk Pipe Plug 3/4	4
	655015	Cotter Pin 3/16 x 1	2
2	600421	Counterweight - Inside	1
3	600422	Counterweight - Outside	1
4	600423	Oil Cap	1
5	600424	Oil Breather w/Dipstick	1
6	600425	Grill	1
	650452	Hex. Hd. Cap Screw 7/16 x 1-1/2 Gr. 5	4
		(4) 7/16 HN 653015 - (4) 7/16 LW 654028	
7	600426	Filter Bracket	1
	650393	Hex. Hd. Cap Screw 5/16 x 3/4 Gr. 5	2
	650430	Hex. Hd. Cap Screw 3/8 x 1 Gr. 5.	2
		(2) 5/16 LW 654024 - (2) 3/8 LW 654026	
8	600427	Oil Cooler Bracket	1
		(Two Req'd. before Serial No. 2374)	
	650393	Hex.Hd.Cap Screw 5/16 x ¾ Gr. 5	1
	650430	Hex.Hd.Cap Screw 5/16 x 1 Gr. 5	1
		(2) 5/16 HN 653007 - (2) 5/16 LW 654024	
9	600428	Seat Support	1
		(Used before Serial No. 1099)	
	600569	Seat Back Plate	1
		(Used after Serial No. 1098)	
	650028	Hex. Hd. Cap Screw 5/16 x 1	2
		(2) 5/16 HN 653007 - (2) 5/16 LW 654024	
10	600429	Control Valve Mount	1
	650430	Hex. Hd. Cap Screw 3/8 x 1 Gr. 5	3
	650073	Hex. Hd. Cap Screw 3/8 x 2-1/2 Gr. 5	3
		(6) 3/8 HN 653010 - (6) 3/8 LW 654026	
11	600450	Oil Drain Hose	1
12	600451	Gasoline Cap	1
13	600522	Seat	1
	650393	Hex. Hd. Cap Screw 5/16 x 3/4 Gr. 5	4
		(4) 5/16 LW 654024	
14	600523	Seat Belt	1
	650451	Hex. Hd. Cap Screw 7/16 x 1-1/4 Gr. 5	2
		(2) 7/16 HN 653015 - (2) 7/16 LW 654028	
15	600559	Counterweight Retainer	1
16	600560	Retainer Bolt	1
		(1) 3/8 HN 653010	
17	600570	Seat Mounting Bar	1
		(Used after Serial No. 1098)	
	650452	Hex. Hd. Cap Screw 7/16 x 1-1/2 Gr. 5	2
		(2) 7/16 HN 653015 - (2) 7/16 LW 654028	
18	600992	Overhead Guard	1
		(Used after Serial No. 1370)	
19	600993	Retainer Plate - Rear	2
	650131	Hex. Hd. Cap Screw 1/2 x 4-1/2	
		(4) 1/2 HN 653018 - (4) 1/2 LW 654030	
20	600994	Retainer Plate - Front	2
	650126	Hex. Hd. Cap Screw 1/2 x 3-3/4	2
		(2) 1/2 HN 653018 - (2) 1/2 LW 654030	
21	660067	Oil Drain Hose Cap	1

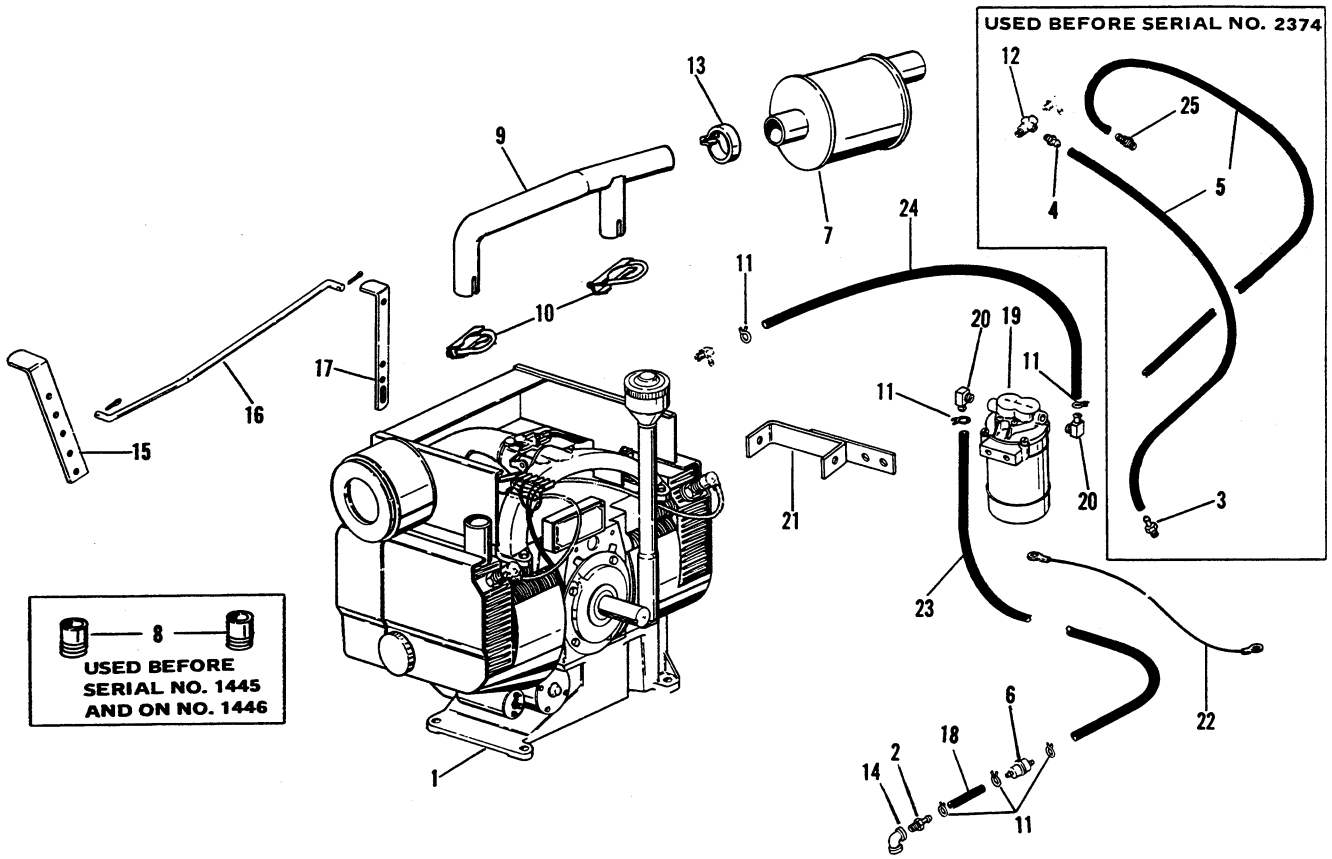

Ref. No.	Part No.	Part Name	No. Req.
1	600370	Onan Engine - NH-MS/1918C .... (Used before Serial No. 1445 and on Serial No. 1446)	1
	602213	Onan Engine - NHC-MS/2313A ... (Used on Serial No. 1445 and after Serial No. 1446)	1
2	600445	Barb Bushing 1/4 x 1/4	1
3	600446	Barb Bushing 1/8 x 1/4	2
4	600447	Restrictor Bushing - 1/8	1
5	600448	Gas Hose - 1/4 x 32	2
6	600449	Gasoline Filter	1
7	600456	Muffler	1
8	600457	Exhaust Manifold Adapter ..... (Used before Serial No 1445 and on Serial No. 1446)	2
9	600458	Exhaust Pipe ..... (Used before Serial No. 1445 and on Serial No. 1446)	1
	602241	Exhaust Pipe ..... (Used on Serial No. 1445 and after Serial No. 1446)	1
10	600459	U-Clamp ..... (Used before Serial No. 1445 and on Serial No. 1446)	2
	602242	U-Clamp ..... (Used on Serial No. 1445 and after Serial No. 1446)	2
11	600571	Hose Clamp ..... (Three used before No. 2374)	6
12	600577	Gas Line Tee	1

Ref. No.	Part No.	Part Name	No. Req.
13	600581	Muffler Clamp	1
	650400	Hex. Hd. Cap Screw 5/16 x 1 Gr.5 (1) 5/16 HN 653007 - (1) 5/16 LW 654024	1
14	660089	Elbow 1/4 x 90°	1
15	600995	Throttle Lever	1
	650005	Hex. Hd. Cap Screw 1/4 x 3/4 .. (1) 1/4 HLN 653071	1
16	600996	Throttle Rod	1
	650515	Push-On Nut - 5/16	2
17	600997	Engine Throttle Lever	1
18	602239	Tank to Filter Hose 1/4 x 4	1

ELECTRIC FUEL PUMP (Used After Serial No. 2373)

19	602142	Electric Fuel Pump	1
	650005	Hex.Hd.Cap Screw 1/4 x 3/4 .... (2) 1/4 LW 654022	2
20	602234	90° Barb Fitting 1/8 x 1/4.....	2
21	602235	Oil Cooler Bracket - Rear	1
	650393	Hex.Hd.Cap Screw 5/16 x ¾ Gr.5	1
	650430	Hex.Hd.Cap Screw 5/16 x 1 Gr. 5 (2) 5/16 HN 653007 - (2) 5/16 LW 654024	1
22	602236	Ignition Block to Fuel Pump Wire ..	1
23	602237	Tank to Pump Fuel Hose 1/4 x 26 ..	1
24	602238	Carburetor to Fuel Pump Hose ¼ x 18	1
25	602240	Fuel Pump Adapter	1

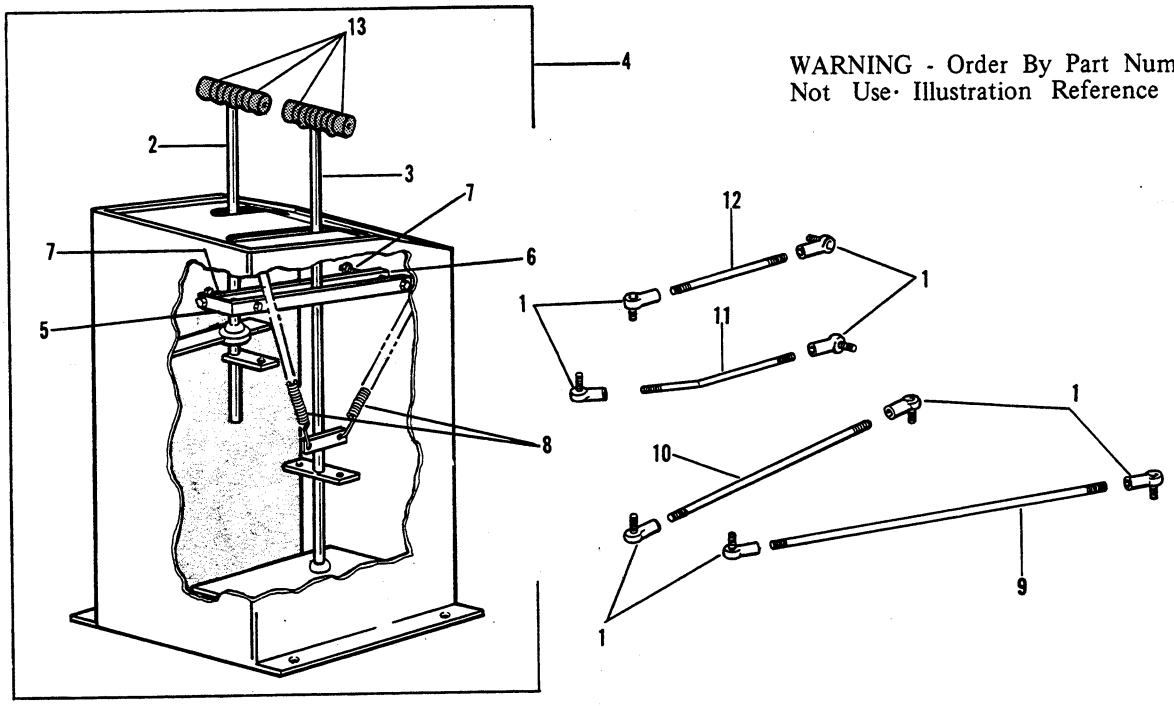

WARNING - Order By Part Number - Do Not Use· Illustration Reference Numbers

Ref. No.	Part No.	Part Name	No. Req.
1	600270	Rod End	8
		(8) 5/16 N.F. HLN 653121	
2	600430	Control Lever - Right	1
3	600431	Control Lever - Left	1
4	600432	Control Lever Console	1
	650448	Hex. Hd. Cap Screw 1/4 x 3/4 Gr. 5	1
	650400	Hex. Hd. Cap Screw 5/16 x 1 Gr. 5	4
		(1) 1/4 HN 653005 - (4) 5/16 HN 653007	
		(1) 1/4 LW 654022 - (4) 5/16 LW 654024	
5	600433	Friction Bar - Mounted	1
6	600434	Friction Bar - Loose	1
	650449	Hex. Hd. Cap Screw 1/4 x 2-1/2 Gr. 5	2
		(2) 1/4 HN 653005 - (2) 1/4 LW 654022	

Ref. No.	Part No.	Part Name	No. Req.
7	600435	Tension Spring	2
8	600436	Centering Spring	2
9	600437	Control Rod - Left	1
		(2) 5/16 HJN 653034	
10	600438	Control Rod - Right	1
		(2) 5/16 HJN 653034	
11	600439	Lift Control Rod	1
		(2) 5/16 HJN 653034	
12	600440	Tilt Control Rod	1
		(2) 5/16 HJN 653034	
13	600444	Handle Grip	4

ALWAYS GIVE MODEL AND SERIAL NUMBER WHEN ORDERING SERVICE PARTS

WARNING - Order By Part Number - Do Not Use Illustration Reference Numbers

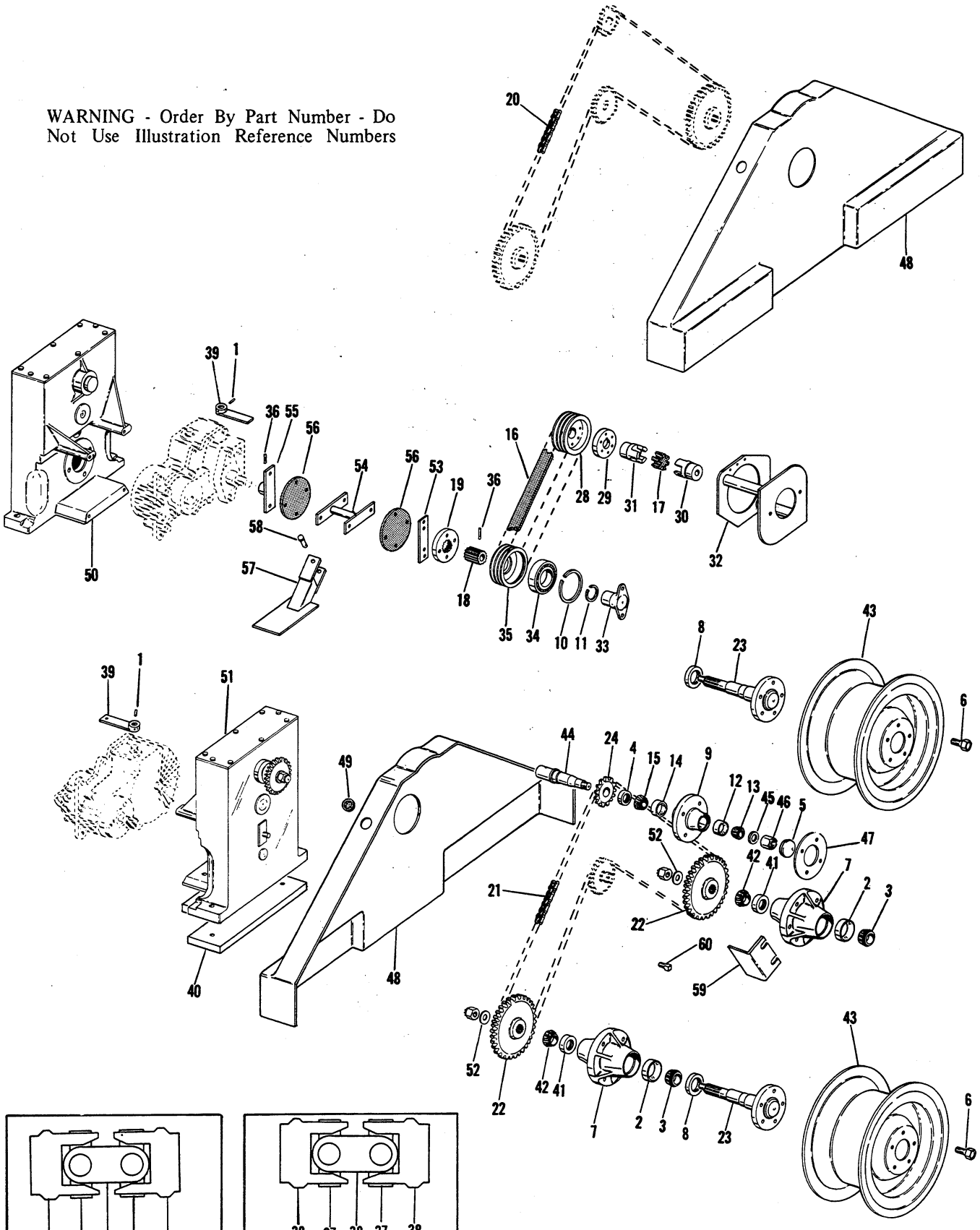

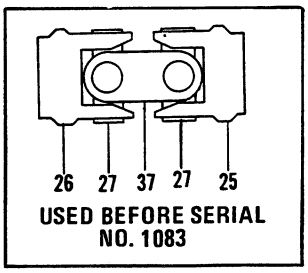

USED BEFORE SERIAL NO. 1083

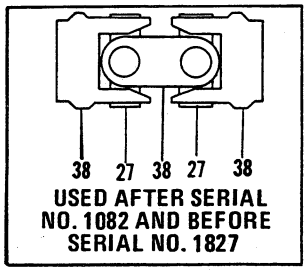

USED AFTER SERIAL NO. 1082 AND BEFORE SERIAL NO. 1827

Ref. No.	Part No.	Part Name	No. Req.
1	040775	Roll Pin - 1/4 x 1-1/4	2
2	042162	Bearing Cup - Outside	4
3	042163	Bearing Cone - Outside	4
4	046019	Idler Seal	2
5	046023	Dust Cup	2
6	050560	Wheel Bolt	20
7	053328	Wheel Hub	4
	570014	Grease Fitting*	4
	650424	Hex. Hd. Cap Screw 9/16 N.F. x 2	24
		(24) 9/16 N.F. HN 653114	
		(24) 9/16 LW 654056	
8	053329	Wheel Seal	8
		(Four Req'd. before Serial No. 1254)	
9	053330	Idler Hub	2
	650352	Hex. Hd. Cap Screw 1/2 N.F. x 1-1/2	8
		(8) 1/2 LW 654030	
10	053333	Internal Retaining Ring	1
11	053334	External Retaining Ring	1
12	520021	Bearing Cup - Outside	2
13	520022	Bearing Cone - Outside	2
14	520054	Bearing Cup - Inside	2
15	520201	Bearing Cone - Inside	2
16	600264	Drive Belt	1
17	600265	Coupling Insert	1
18	600268	Adapter Shaft	1
		(Used before Serial No. 1827)	
	650514	Woodruff Key 3/16 x 7/8	1
	601924	Adapter Shaft	1
		(Used after Serial No. 1826)	
19	600269	Torque Adapter	1
	650054	Hex. Hd. Cap Screw 3/8 x 5/8	4
20	600272	Drive Chain - Right (No. 60 x 156)	1
21	600273	Drive Chain - Left (No. 60 x 158)	1
22	600275	Axle Sprocket (36T)	4
23	600276	Axle	4
	653088	Slotted Nut - 3/4 NF	4
	655010	Cotter Pin 1/8 x 1-1/2	4
24	600279	Idler Sprocket (11T)	2
	650212	3/8 x 3/8 Socket Hd.Set Screw	2
25	600284	Joint Yoke w/Keyway	1
		(Used before Serial No. 1083)	
26	600285[A]	Joint Yoke w/Pin Hole	1
		(Used before Serial No. 1083)	
27	600286	Center Cross Kit	2
		(Used before Serial No. 1083)	
	510263	Center Cross Kit	2
		(Used after Serial No. 1082 and before Serial No. 1827)	
28	600371	Engine Sheave (5.3 Dia.)	1
29	600372	Engine Sheave Hub	1
30	600373	Pump Coupling Jaw	1
31	600374	Engine Coupling Jaw	1
32	600375	Pump Mounting Bracket	1
	650396	Hex.Hd.Cap Screw 3/8 x 1-1/4 Gr. 5	4
		(4) 3/8 LW 654026	
33	600376	Bearing Mount	1
34	600377	Pump Sheave Bearing	1
35	600378	Hydro-Stat Sheave (4.95 Dia.)	1
36	600379	Tapered Pin 1/4 x 1-1/2	2
37	600380[A]	Center Yoke	1
		(Used before Serial No. 1083)	
38	600381[A]	Drive Joint Assembled	1
		(Used after Serial No. 1082 and before Serial No. 1827)	
39	600384	Control Lever	2
40	600385	Transmission Spacer	1
41	520046	Bearing Cup	4
		(Used before Serial No. 1022)	
	600386	Bearing Cup	4
		(Used after Serial No. 1021)	
42	520048	Bearing Cone	4
		(Used before Serial No. 1022)	
	600387	Bearing Cone	4
		(Used after Serial No. 1021)	
43	600388	Wheel	4
44	600389	Idler Shaft	2
	655010	Cotter Pin 1/8 x 1-1/2	2
45	600390	Thrust Washer	2
46	600391	Idler Shaft Nut	2
47	600392	Chain Take-Up Washer	2
48	600393[B]	Chain Cover	2
		(Used before Serial No. 2345)	
	602233	Chain Cover	2
		(Used after Serial No. 2344)	
	650019	Hex.Hd.Cap Screw 1/4 x 4	8
		(8) 1/4 HN 653005 - (8) 1/4 LW 654022	
49	600394	Lubrication Hole Cover	2
50	600395[C]	Transmission Assembled - Right	1
		(Used before Serial No. 1719)	
	602140	Transmission Assembled - Right	1
		(Used after Serial No. 1718)	
	650433	Hex.Hd.Cap Screw ½ x 1-1/4 Gr.5	2
	650109	Hex.Hd.Cap Screw ½ x 1½	4
		(6) 1/2 LW 654030	
51	600396[D]	Transmission Assembled - Left	1
		(Used before Serial No. 1719)	
	602141	Transmission Assembled - Left	1
		(Used after Serial No. 1718)	
	650435	Hex.Hd.Cap Screw 1/2 x 2-1/4 Gr.5	2
	650308	Hex.Hd.Cap Screw 1/2 x 2-1/2	4
		(6) 1/2 LW 654030	
52	600419	Thrust Washer	2
53	601925	Drive Bar - Left	1
		(Used after Serial No. 1826)	
	650060	Hex.Hd.Cap Screw 3/8 x 1	2
		(2) 3/8 HN 653010 - (2) 3/8 LW 654026	
54	601926	Drive Bar - Center	1
		(Used after Serial No. 1826)	
	650029	Hex. Hd.Cap Screw 5/16 x 1-1/4	4
		(4) 5/16 HLN 653073	
55	601927	Drive Bar - Right	1
		(Used after Serial No. 1826)	
	650029	Hex.Hd.Cap Screw 5/16 x 1-1/4	2
		(2) 5/16 HLN 653073	
56	601928	Fibre Coupler	2
		(Used after Serial No. 1826)	
		(32) 5/16 PW 654004	
57	602230	Flexible Coupler Guard	1
		(Used after Serial No. 2268)	
58	602231	Coupler Guard Pin	1
		(Used after Serial No. 2268)	
	655004	Cotter Pin 1/8 x 3/4	1
59	602267	Chain Guide	2
		(Used after Serial No. 2344)	
60	650253	Square Head Set Screw 1/2 x 4-1/2	1

*Used after Serial No. 1444

[A] For Replacement, Order 601923.

[B] For Replacement, Order 602233.

[C] For Replacement, Order 601910.

[D] For Replacement, Order 601911.

NOTE: See Page 10 for Transmission Service Parts.

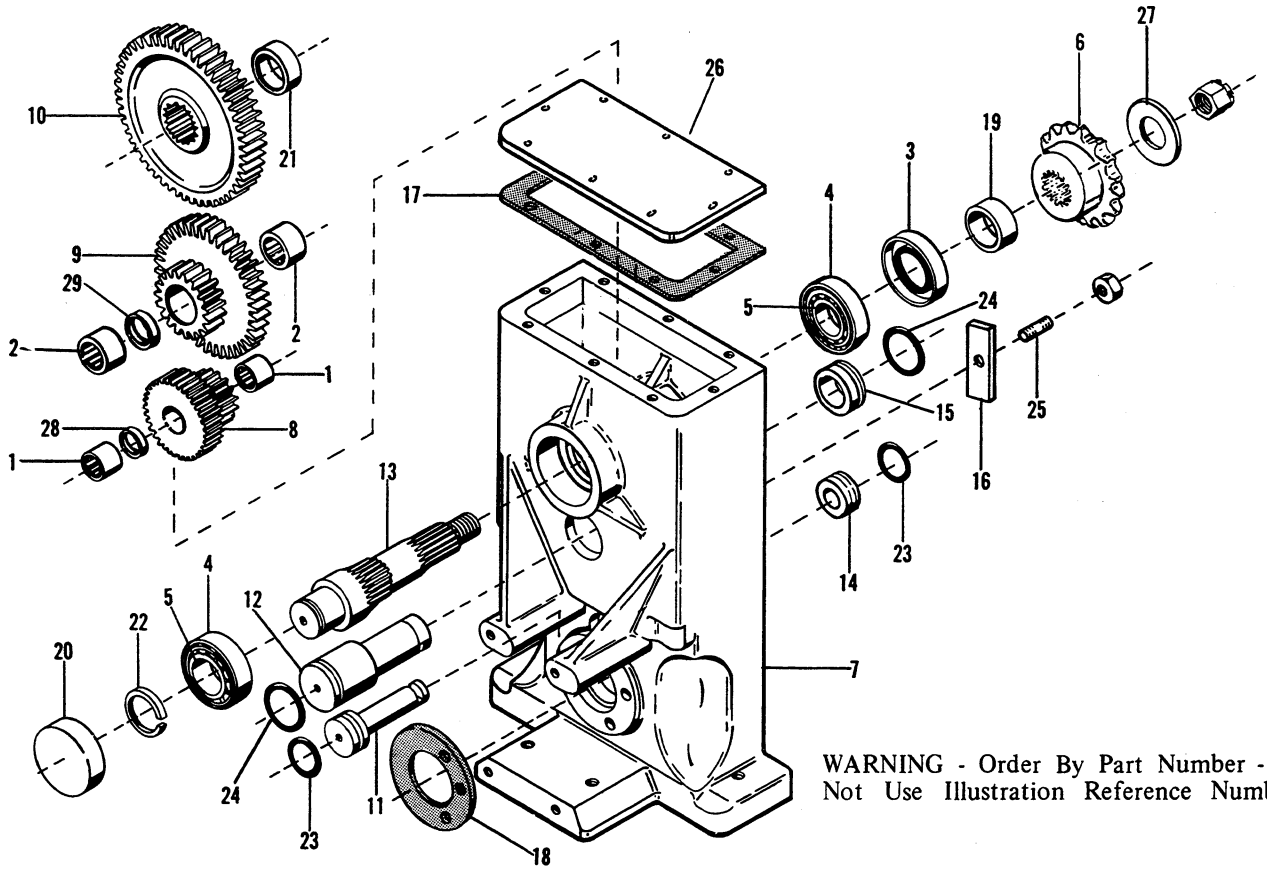

WARNING - Order By Part Number - Do Not Use Illustration Reference Numbers

Ref. No.	Part No.	Part Name	No. Req. (Per Transmission)
1	053331	Primary Needle Bearing	2
2	053332	Secondary Needle Bearing (Used before Serial No. 1718)	2
	520138	Secondary Needle Bearing (Used after Serial No. 1717)	2
3	053335	Output Shaft Seal	1
4	520046	Bearing Cup - Inside	2
5	520047	Bearing Cone - Inside	2
6	600274	Drive Sprocket (20T)	1
7	600398	Main Case - Right (Used before Serial No. 1718)	1
	602206	Main Case - Right (Used after Serial No. 1717)	1
	600399	Main Case - Left (Used before Serial No. 1718)	1
	602207	Main Case - Left (Used after Serial No. 1717)	1
8	600400	Primary Gear (15T - 34T)	1
9	600401[A]	Secondary Gear (19T - 40T) (Used before Serial No. 1718)	1
	602204	Secondary Gear (19T - 40T) (Used after Serial No. 1717)	1
10	600402	Final Gear (50T)	1
11	600403	Primary Shaft	1
12	600404	Secondary Shaft (Used before Serial No. 1718)	1
	602208	Secondary Shaft (Used after Serial No. 1717)	1
13	600405	Output Shaft	1
	653089	Slotted Nut - 3/4 N.F. (Used before Serial No. 1718)	1
	602209	Output Shaft	1
	653089	Slotted Nut - 3/4 N.F. (Used after Serial No. 1717)	1
14	600406	Primary Collar	1
15	600407	Secondary Collar	1
16	600408	Cam Lock Bar	1
17	600409	Cover Gasket	1
18	600410	Pump Gasket	1
19	600411	Output Shaft Seal Collar (Used before Serial No. 1718)	1
	602205	Output Shaft Seal Collar (Used after Serial No. 1717)	1
20	600412	Dust Cover	1
21	600413	Final Gear Spacer (Used before Serial No. 1718)	1
	602203	Final Gear Spacer (Used after Serial No. 1717)	1
22	600414	"E" Ring	1
23	600415	Primary Shaft "O" Ring	2
24	600416	Secondary Shaft "O" Ring	2
25	600417	Stud - 3/8 x 1-1/8 (1) 3/8 HN 653010 - (1) 3/8 LW 654026	1
26	600418	Transmission Cover	1
27	600419	Thrust Washer	1
28	601001	Primary Gear Spacer	1
29	602210	Secondary Gear Spacer (Used after Serial No. 1717)	1

[A] For Replacement, Order 600401 with (1) 053332 and (1) 520138.

WARNING - Order By Part Number - Do Not Use Illustration Reference Numbers

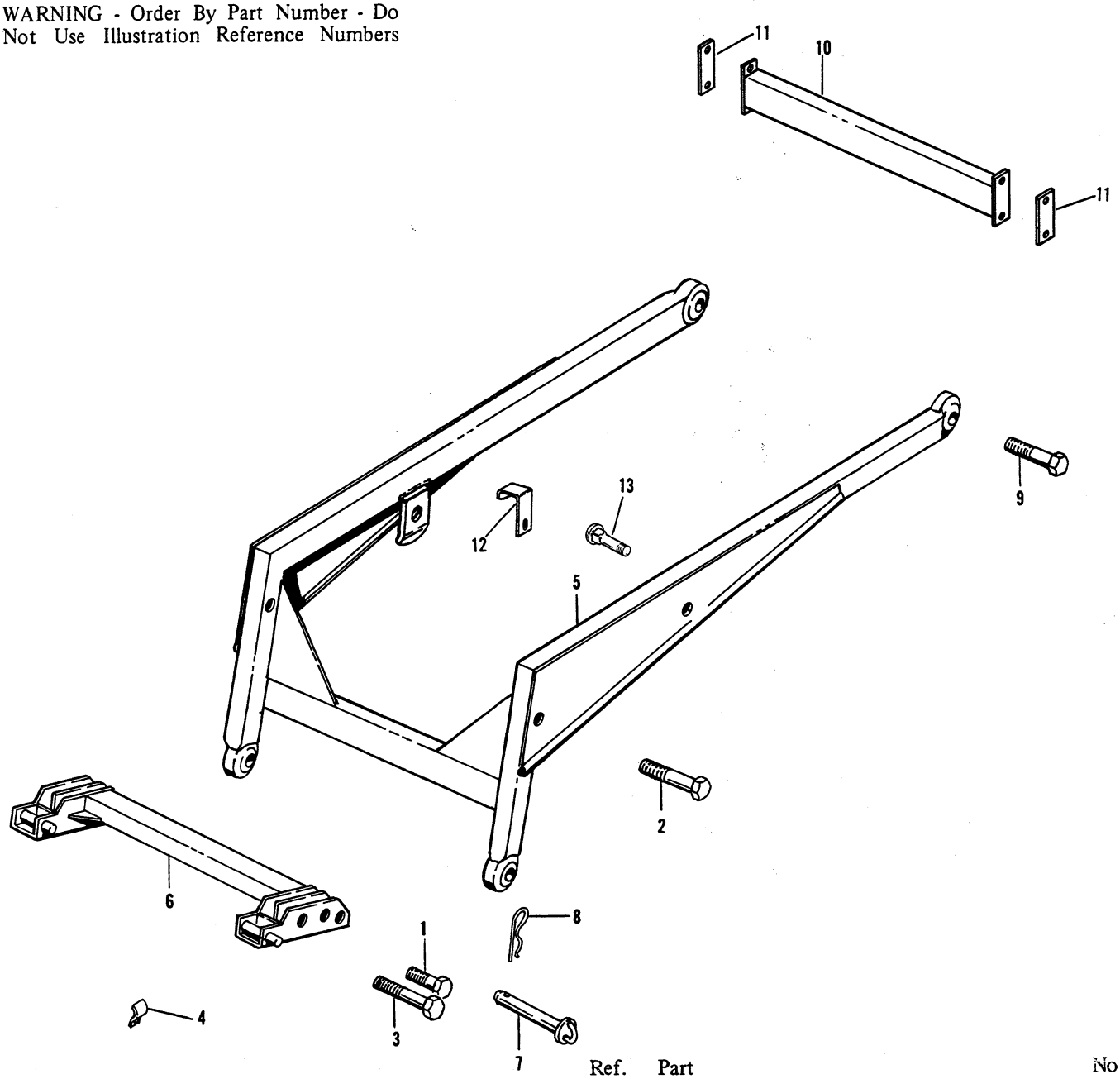

Ref. No.	Part No.	Part Name	No. Req.
1	600345	Attachment Bracket Bolt - 3/4 x 3-1/2 Gr. 5	2
		(4) 1" HN 653130 - (4) 1" LW 654057	
2	600357	Tilt Cylinder Bolt - 3/4 x 5-1/2 Gr. 5	2
		(2) 3/4 HN 653026 - (2) 3/4 LW 654034	
3	600364	Tilt Cylinder Bolt - 3/4 x 6 Gr. 5	2
		(2) 3/4 HN 653026 - (2) 3/4 LW 654034	
4	600442	Hose Clamp	4
		(12 Req'd before Serial No. 1330)	
	650005	Hex. Hd. Cap Screw 1/4 x 3/4	2
5	600491	Load Arm	1
	570014	Grease Fitting	4
6	600492	Attachment Bracket	1
7	600493	Attachment Pin	2
8	600494	Hair Pin Cotter	2
9	600495	Lift Cylinder Bolt - 1 x 4-1/2 Gr. 5	4
		(4) 1" HN 653130 - (4) 1" LW 654057	
10	600990	Cross Brace	1
		(Used after Serial No. 1329)	
11	600991	Brace Retainer	2
		(Used after Serial No. 1329)	
	650312	Hex. Hd. Cap Screw 3/8 x 3	4
		(4) 3/8 HN 653010 - (4) 3/8 LW 654026	
12	600998	Hydraulic Hose Clamp	4
		(Used after Serial No. 1329)	
	650005	Hex. Hd. Cap Screw	4
13	650516	Carriage Bolt - 3/4 x 3-1/2	2
		(2) 3/4 HN 653026 - (2) 3/4 LW 654034	

ALWAYS GIVE MODEL AND SERIAL NUMBER WHEN ORDERING SERVICE PARTS

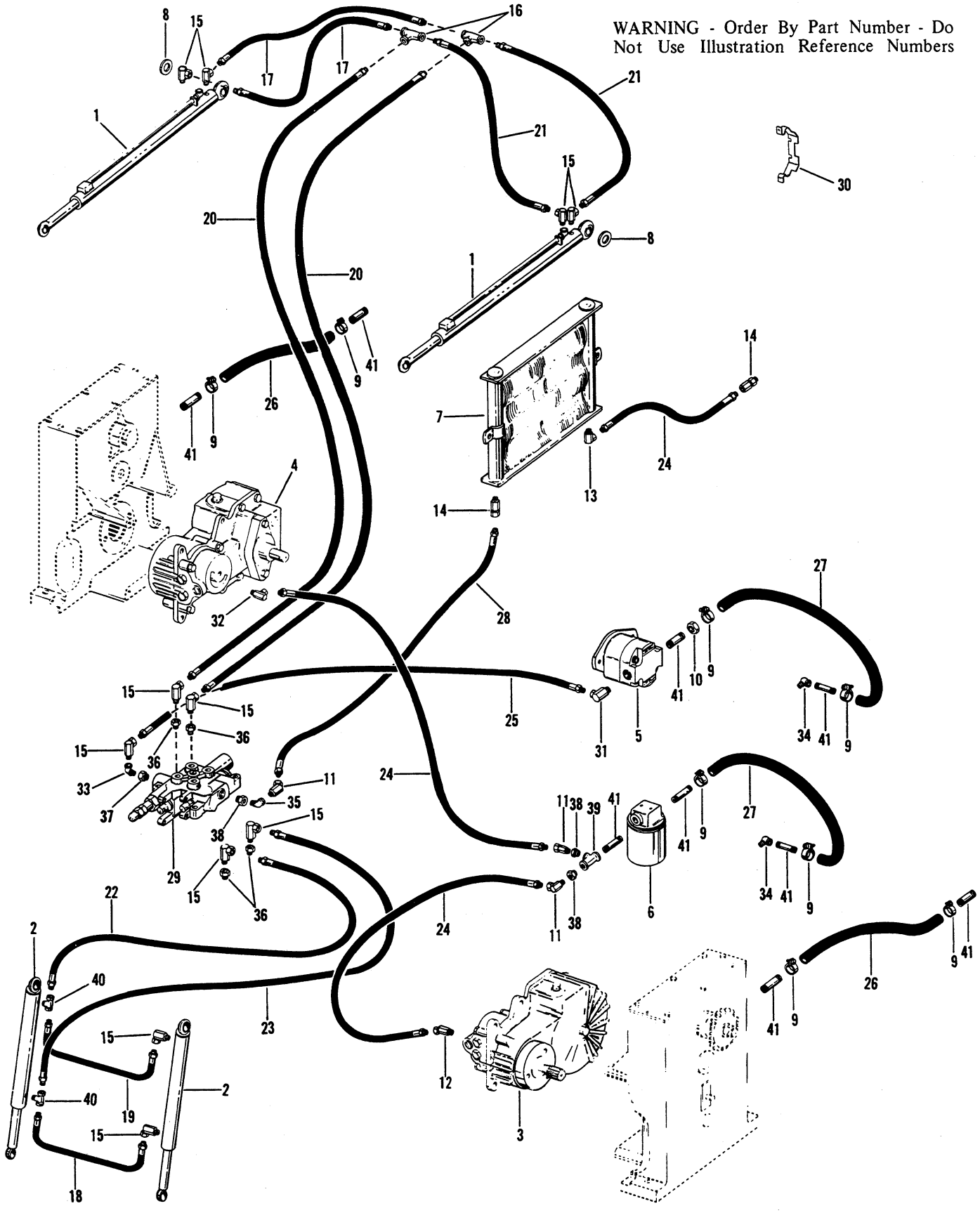

ALWAYS GIVE MODEL AND SERIAL NUMBER WHEN ORDERING SERVICE PARTS

Ref. No.	Part No.	Part Name	No. Req.
1	600282[A]	Lift Cylinder	2
		(Used before Serial No. 1042)	
	570014	Grease Fitting	4
	600466[C]	Lift Cylinder	2
		(Used after Serial No. 1041 and before Serial No. 2257)	
	570014	Grease Fitting	4
	602266[C]	Lift Cylinder	2
		(Used after Serial No. 2256)	
	570014	Grease Fitting	4
2	600283[B]	Tilt Cylinder	2
		(Used before Serial No. 1042)	
	570014	Grease Fitting	4
	600465[C]	Tilt Cylinder	2
		(Used after Serial No. 1041 and before Serial No. 2256)	
	570014	Grease Fitting	4
	602256[C]	Tilt Cylinder	2
		(Used after Serial No. 2255)	
	570014	Grease Fitting	4
3	600460[D]	Hydro-Transmission - Left	1
	650396	Hex.Hd.Cap Screw 3/8 x 1¼ Gr.5	4
		(4) 3/8 LW 654026	
4	600461[E]	Hydro-Transmission - Right	1
	650396	Hex.Hd.Cap Screw 3/8 x 1¼ Gr.5	4
		(4) 3/8 LW 654026	
5	600462[F]	Oil Pump	1
	650095	Hex.Hd.Cap Screw 7/16 x 1¼	2
		(2) 7/16 HN 653015 - (2) 7/16 LW 654028	
6	600463[G]	Oil Filter	1
7	600464	Oil Cooler	1
8	600469	Lift Cylinder Spacer	2
9	600470	Hose Clamp	8
10	600471	Sealing Jam Nut - 3/4	1
11	600472	45° Swivel Elbow - 1/2 x 1/2	3
12	600473[H]	45° Swivel Elbow - 1/2 x 3/4	1
		(Two Req'd. before Serial No. 2269)	
13	600475	90° Swivel Elbow - 1/2 x 1/2	1
14	600476	Straight Adapter - 1/2 x 1/2	2
15	600477	90° Swivel Elbow - 3/8 x 3/8	11
16	600478	Tee Adapter - 3/8	2
17	600479	Lift Cylinder Hose - Right 3/8 x 24	2
18	600480	Tilt Cylinder Hose - Lower 3/8 x 34	1
19	600481	Tilt Cylinder Hose - Upper 3/8 x 34	1
20	600482	Control Valve to Lift Cylinder Hose - 3/8 x 37	2
21	600483	Lift Cylinder Hose - Left 3/8 x 40	2
22	600484	Control Valve to Tilt Cylinder Hose - 3/8 x 140	1
23	600485	Control Valve to Tilt Cylinder Hose - 3/8 x 156	1
24	600486	Oil Filter to Hydro-Transmission Hose - 1/2 x 35	3
25	600487	Control Valve to Oil Pump Hose - 3/8 x 46	1
26	600488	Reservoir to Transmission Hose - 1 x 18	2
27	600489	Reservoir to Pump Hose - 1 x 24	2
28	600490	Control Valve to Oil Cooler Hose - 1/2 x 24	1
29	600584[J]	Control Valve	1
30	601988	Towing Clip (Accessory)	2
31	602211[K]	90° Swivel Elbow - 1/2 x 1/2	1
		(Used after Serial No. 2268)	
32	602232[H]	90° Swivel Elbow 1/2 x 3/4	1
		(Used after Serial No. 2268)	
33	660019	Street Elbow - 3/8 x 90°	1
34	660021	Street Elbow - 3/4 x 90°	2
35	660039	Street Elbow - 1/2 x 90°	1
36	660046	Reducing Bushing - 1/2 x 3/8	4
37	660049	Reducing Bushing - 3/4 x 3/8	1
38	660050	Reducing Bushing - 3/4 x 1/2	3
39	660059	Pipe Tee - 3/4	1
40	660061	Tee - 3/8	2
41	660064	Pipe Nipple - 3/4 x 2-1/2	9

[A] To Service Lift Cylinder Before Serial No. 1042, specify Kit Number 600468.
[B] To Service Tilt Cylinder Before Serial No. 1042, specify Kit Number 600467.
[C] See Page 28 for Hydraulic Cylinder Service Parts.
[D] See Page 32 for Transmission Service Parts.
[E] See Page 31 for Transmission Service Parts.
[F] See Page 28 for Oil Pump Service Parts.
[G] To Order Oil Filter Element, specify Part Number 048959.
[H] To Order 45° Elbow "O" Ring, specify Part Number 600582.
[J] See Page 30 for Control Valve Service Parts.
[K] To Order 90° Elbow "O" Ring, specify Part Number 602212.

WARNING - Order By Part Number - Do Not Use Illustration Reference Numbers

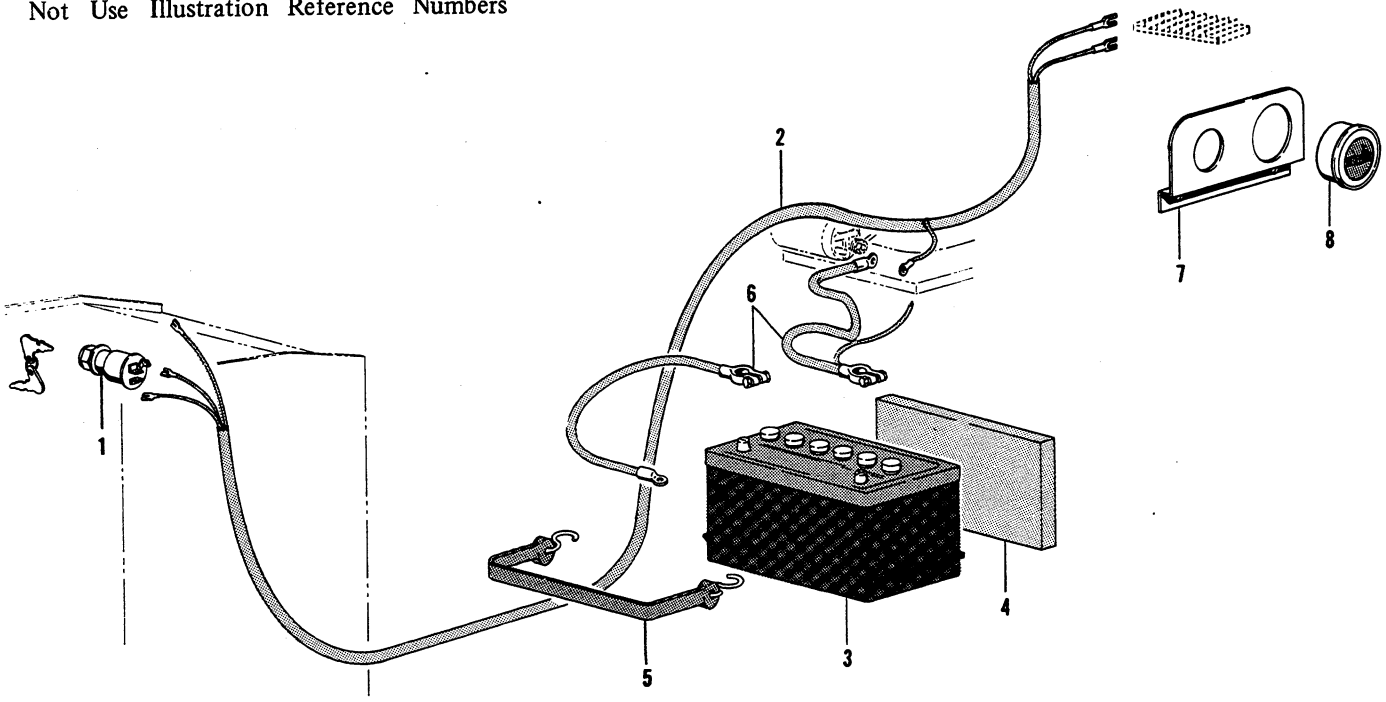

Ref. No.	Part No.	Part Name	No. Req.
1	600443[A]	Ignition Switch	1
2	600444	Wiring Harness	1
3	600452	Battery	1
4	600453	Battery Pad	1
5	600454	Battery Hold-Down	1
6	600455	Battery Cable	2
7	600505	Indicator Bracket	1
8	600506	Hour Meter	1

[A]To Order Ignition Switch Key, Specify Part Number 600524.

ALWAYS GIVE MODEL AND SERIAL NUMBER WHEN ORDERING SERVICE PARTS

MANURE FORK
(54" Wide - 9 Tines)

Ref. No.	Part No.	Part Name	No. Req.
1	600497	Manure Fork	1

NOTE: To Order Manure Fork Tooth, Specify Part No. 054654.

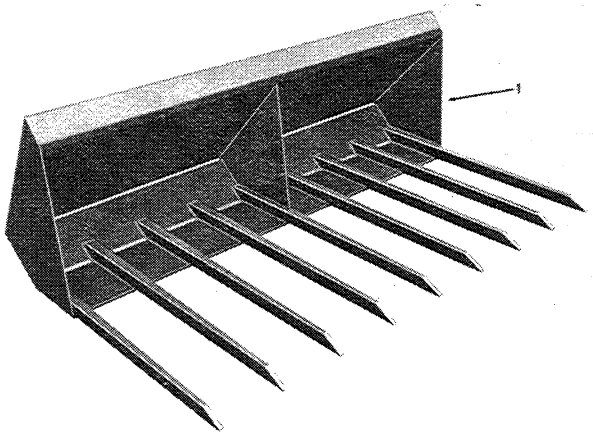

PALLET FORK
(30" Forks - Adjustable Width)

Ref. No.	Part No.	Part Name	No. Req.
1	600503	Pallet Fork Carriage	1
2	600504	Pallet Fork	2

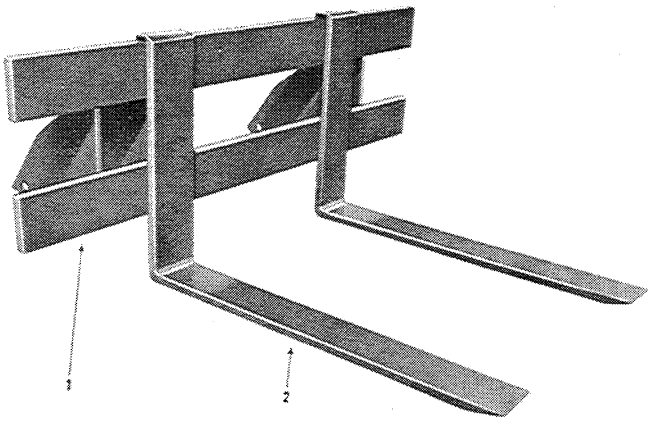

DRAWBAR

Ref. No.	Part No.	Part Name	No. Req.
1	600564	Drawbar	1
	650433	Hex. Hd. Cap Screw 1/2 x 1¼ Gr. 5	2
		(2) 1/2 LW 654030	

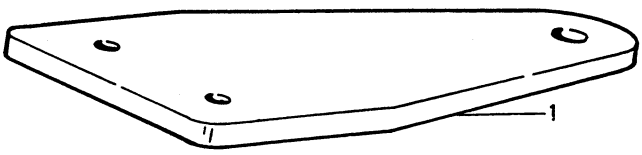

AMMETER

Ref. No.	Part No.	Part Name	No. Req.
1	600507	Ammeter	1

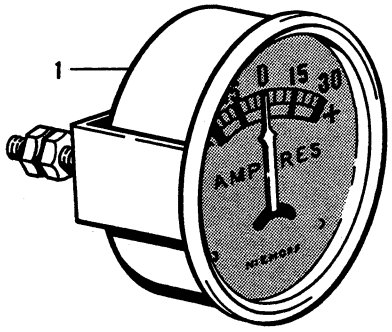

OVERHEAD GUARD
(Additional Operator Protection)
(Used before Serial No. 1371)

Ref. No.	Part No.	Part Name	No. Req.
1	600508	Overhead Guard	1
	650453	Hex. Hd. Cap Screw 1/2 x 1½ Gr. 5	2
	650454	Hex. Hd. Cap Screw 1/2 x 3¾ Gr. 5	4
		(6) 1/2 HN 653018 - (6) 1/2 LW 654030	
2	600574	Guard Retainer Plate	2
3	600575	Guard Deck Reinforcement	2

WARNING - Order By Part Number - Do Not Use Illustration Reference Numbers

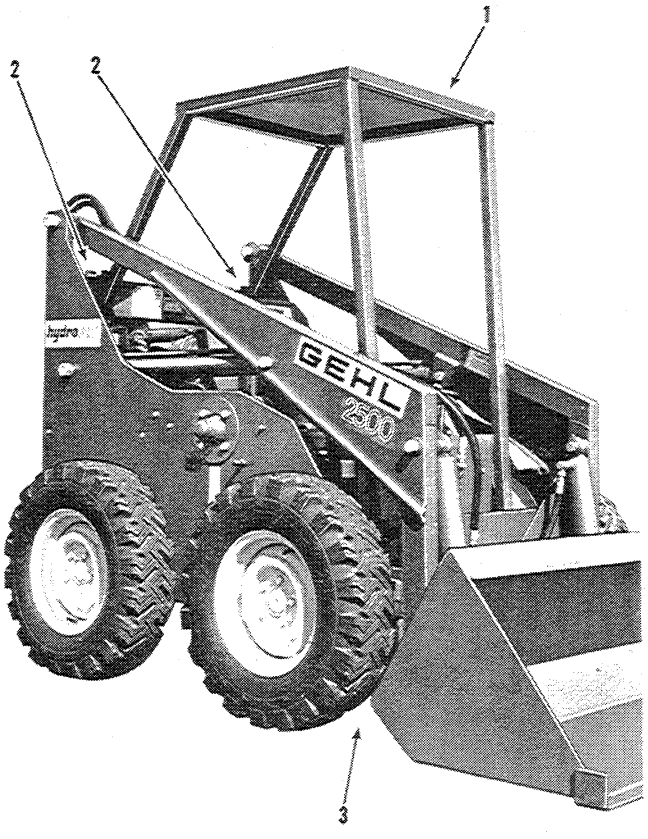

WARNING - Order By Part Number - Do Not Use Illustration Reference Numbers

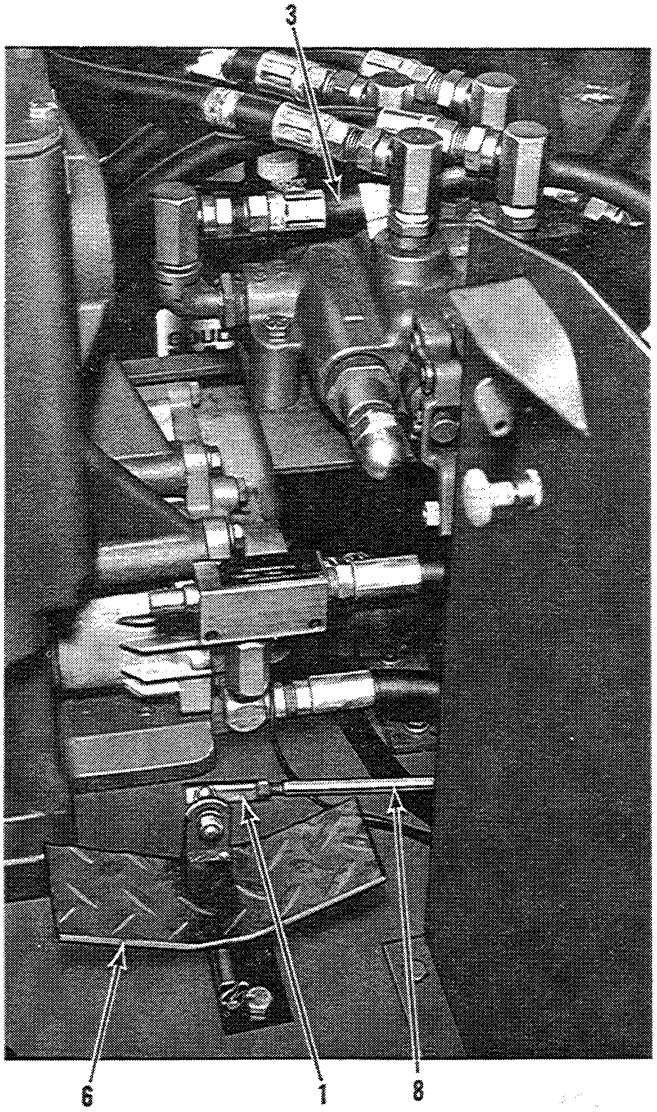

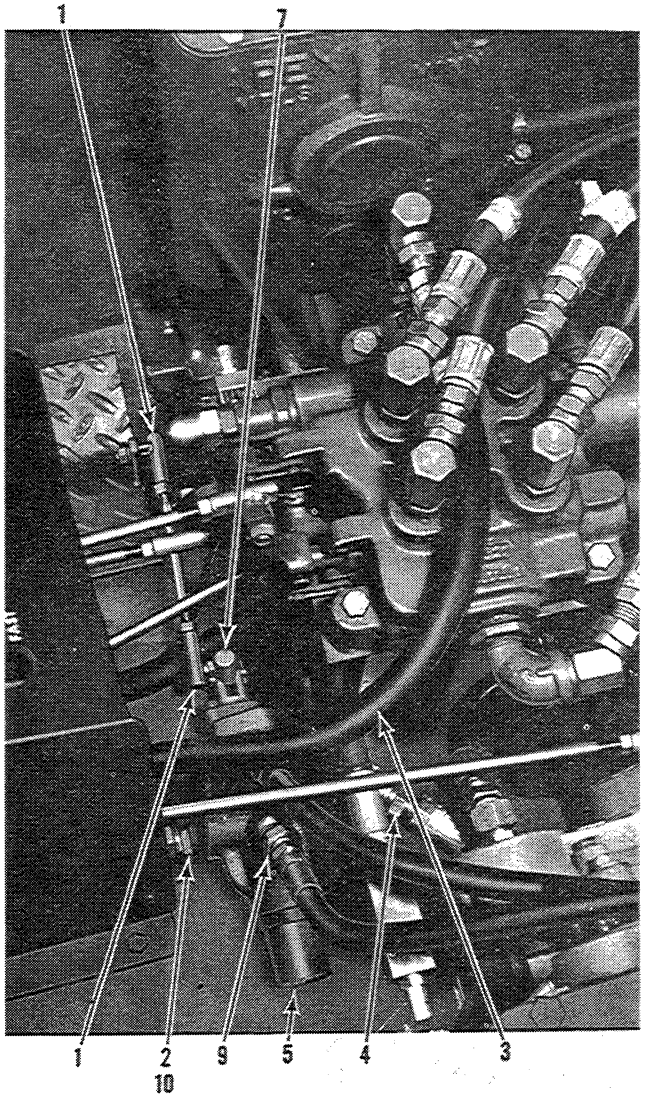

HYDRAULIC KIT

Ref. No.	Part No.	Part Name	No. Req.
1	600270	Linkage End	2
		(2) 5/16 NF HLN 653121	
2	600477	90° Swivel Adapter	1
3	600479	Hose - 3/8 x 24	1
4	600534	45° Swivel Adapter	1
5	600552	Hydraulic Valve	1
	650396	Hex. Hd. Cap Screw 3/8 x 1¼ Gr. 5	2
		(2) 3/8 LW 654026	
6	600553	Control Pedal	1
	650396	Hex. Hd. Cap Screw 3/8 x 1¼ Gr. 5	2
		(2) 3/8 HN 653010 - (2) 3/8 LW 654026	
7	600554	Control Handle	1
8	600555	Control Linkage	1
		(2) 5/16 HJN 653034	
9	660046	Reducing Bushing - 1/2 x 3/8	2
10	660049	Reducing Bushing - 3/4 x 3/8	2

ALWAYS GIVE MODEL AND SERIAL NUMBER WHEN ORDERING SERVICE PARTS

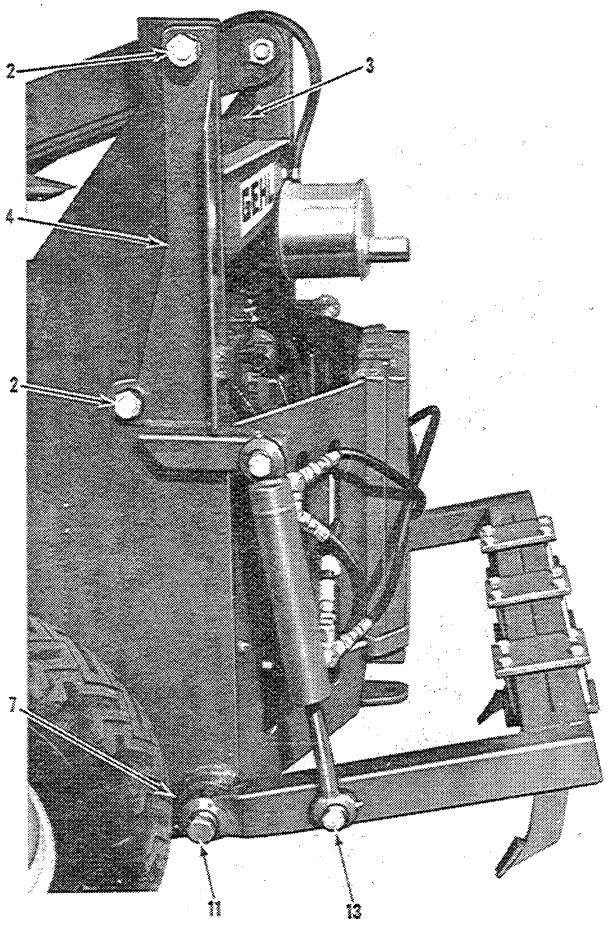

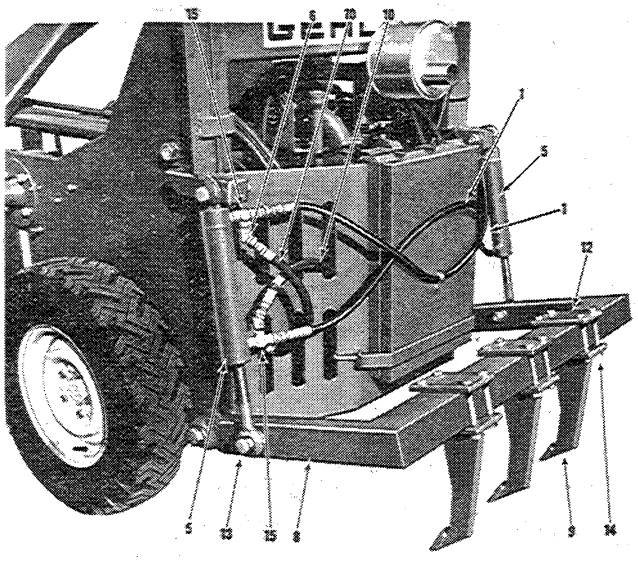

WARNING - Order By Part Number - Do Not Use Illustration Reference Numbers

SCARIFIER

Ref. No.	Part No.	Part Name	No. Req.
1	600481	Hose - 3/8 x 34	2
2	600496	Cylinder Bracket Bolt 1" x 5" Gr. 5	4
3	600528	Cylinder Bracket - Right	1
4	600529	Cylinder Bracket - Left	1
5	600465[A]	Hydraulic Cylinder	2
6	600534	45° Swivel Adapter	4
7	600556	Tool Beam Mounting Block	2
8	600557	Tool Beam	1
9	600558	Scarifier Tooth	3
10	600562	Hose - 3/8 x 60	2
11	600563	Tool Beam Pivot Bolt 1" x 3" Gr. 5 (2) 1" LW 654057	2
12	600573	Tooth Retainer Plate	3
13	650406	Cylinder Pivot Bolt 3/4 x 4½ Gr. 5 (4) 3/4 HN 653026 - (4) 3/4 LW 654034	4
14	650415	Scarifier Tooth Bolt 1/2 x 4½ Gr. 5 (12) 1/2 HN 653018 - (12) 1/2 LW 654030	12
15	660061	Tee	2

[A] To Service Hydraulic Cylinder, Order Cylinder - 14T 600467.

ALWAYS GIVE MODEL AND SERIAL NUMBER WHEN ORDERING SERVICE PARTS

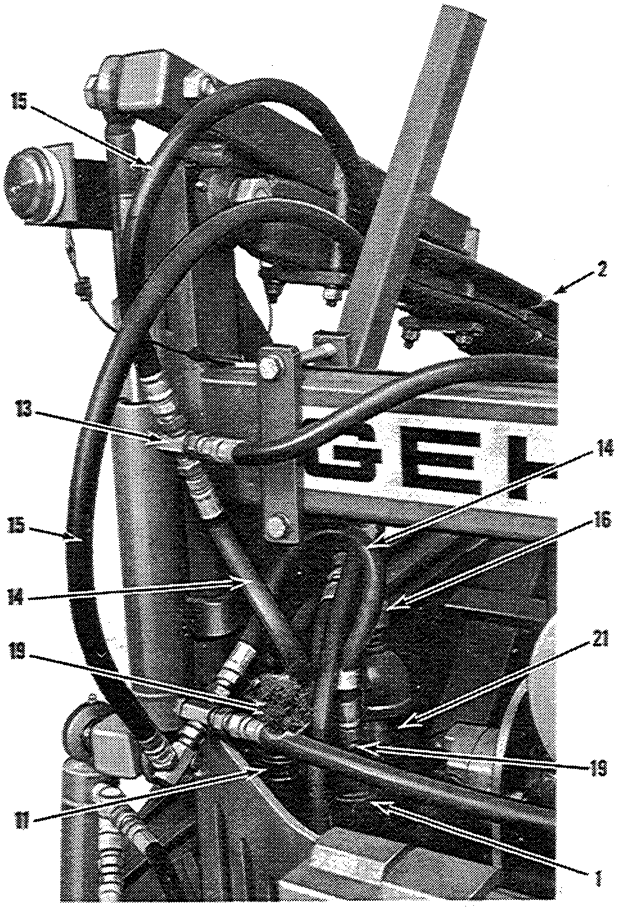

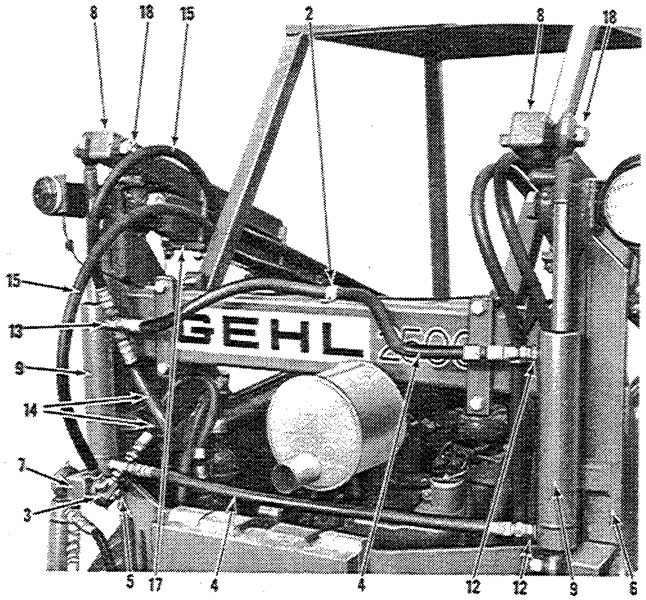

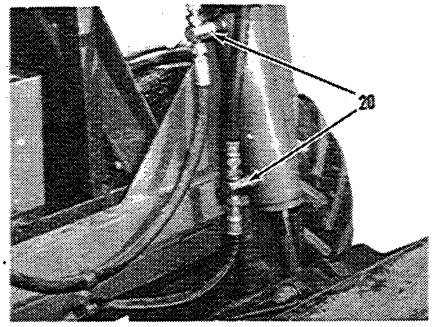

SELF-LEVELING ATTACHMENT

Ref. No.	Part No.	Part Name	No. Req.
1	600585	Tilt Down Relief Valve	1
2	600442	Hose Clamp	9
	650005	Hex. Hd. Cap Screw 1/4 x 3/4	9
3	600477	90° Swivel Elbow	1
4	600480	Cylinder to Cylinder Hose - 28"	2
5	600496[B]	Lift Cylinder Pivot Bolt 1 x 5 (2) 1" HN 653130 - (2) 1" LW 654057	4
6	600528	Cylinder Bracket - Right Lower	1
7	600529	Cylinder Bracket - Left Lower	1
8	600530	Cylinder Bracket - Upper (8) 1/2 HN 653018 - (8) 1/2 LW 654030	2
9	600465[A]	Hydraulic Cylinder	2
10	600532	Oil Filler Adapter	1
11	600586	Tilt Back Relief Valve	1
12	600535	Straight Swivel Adapter	2
13	600536	Swivel Tee Adapter - 3/8	2
14	600537	Relief Valve to Cylinder Hose - 18"	2
15	600538	Lift Cylinder to Tilt Cylinder Hose - 96"	2
16	600539	Dip Stick	1
17	600572	Upper Cylinder Bracket Retainer	4
18	650406[B]	Cylinder Pivot Bolt 3/4 x 4½ Gr. 5 (4) 3/4 HN 653026 - (4) 3/4 LW 654034	4
19	660046	Reducing Bushing - 1/2 x 3/8	2
20	660061	Tee - 3/8	2
21	660092	Close Nipple - 2"	1

[A] To Service Hydraulic Cylinder, Order Cylinder Kit Number 600467.

[B] When Both Self-Leveling Attachment and Scaritier Are Mounted, Use (2) 650406 and (2) 600364.

ALWAYS GIVE MODEL AND SERIAL NUMBER WHEN ORDERING SERVICE PARTS

LIGHTS
(Used before Serial No. 1371)

Ref. No.	Part No.	Part Name	No. Req.
1	600511[A]	Head Light	3
2	600512[B]	Tail Light	1
3	600513[C]	Light Switch w/20 Amp. Fuse	1
4	600514	Toggle Switch	1
5	600515	Light Bracket - Right	1
6	600516	Light Bracket - Left	1
7	600517	Toggle Switch Bracket	1
8	600518	Wire Connector	3
9	600519	Wire Tab	3
10	600520	Wire Terminal	5
11	600521	Light Wire - 13 Ft.	1

[A]To Order Replacement Head Light Element, Specify Part Number 600526.
[B]To Order Replacement Tail Light Bulb, Specify Part Number 600527.
[C]To Order Replacement Fuse, Specify Part Number 600043.

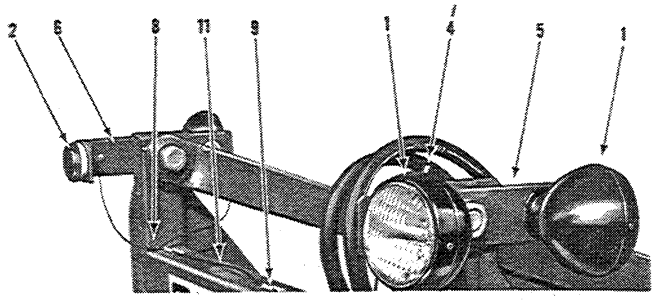

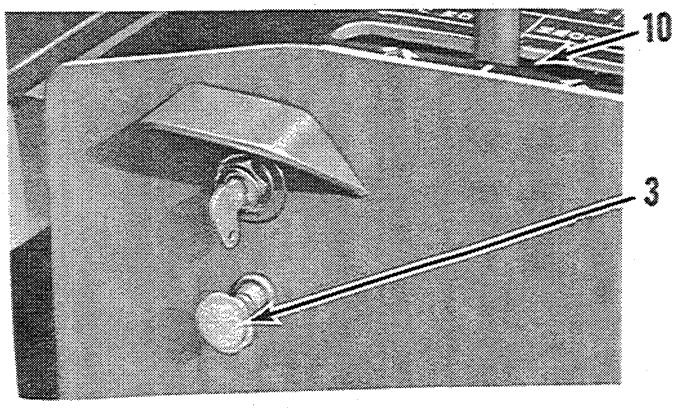

LIGHTS
(Used after Serial No. 1370)

Ref. No.	Part No.	Part Name	No. Req.
1	600511[A]	Head Light	3
2	600512[B]	Tail Light	1
3	600513[C]	Light Switch w/20 Amp. Fuse	1
4	600514	Toggle Switch	1
5	600518	Wire Connector	4
6	600519	Wire Tab	7
7	600520	Wire Terminal	9
8	601006	Light Bracket - Right	2
9	601007	Light Bracket - Left	1
10	601008	Light Wire - 18 Ft. No. 14 Ga.	1

[A]To Order Replacement Head Light Element, Specify Part No. 600526.
[B]To Order Replacement Tail Light Bulb, Specify Part No. 600527.
[C]To Order Replacement Fuse, Specify Part No. 600043.

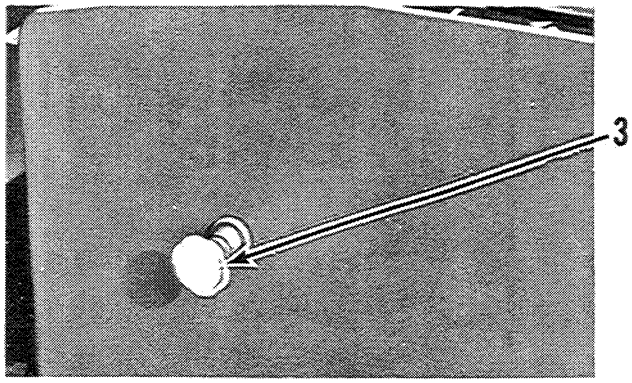

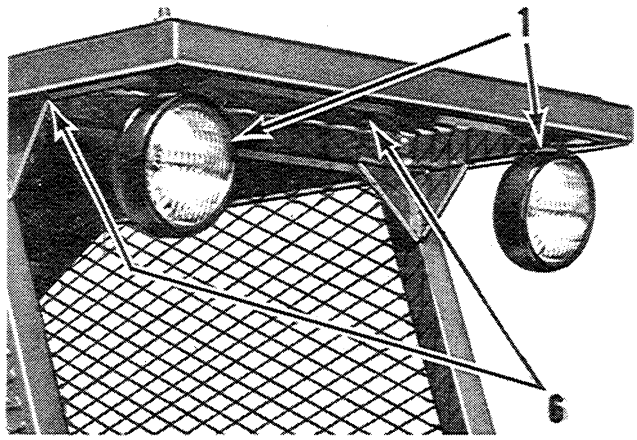

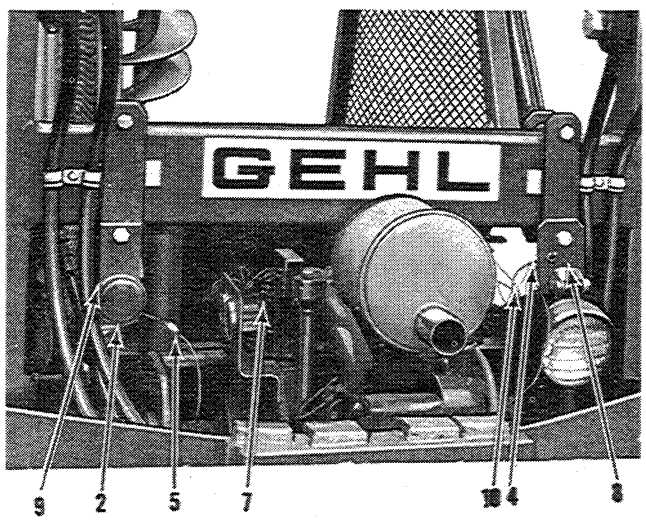

FLOTATION TIRES

Ref. No.	Part No.	Part Name	No. Req.
1	600509	Wheel (For 12:00 x 26 x 12 Flotation Tires)	4

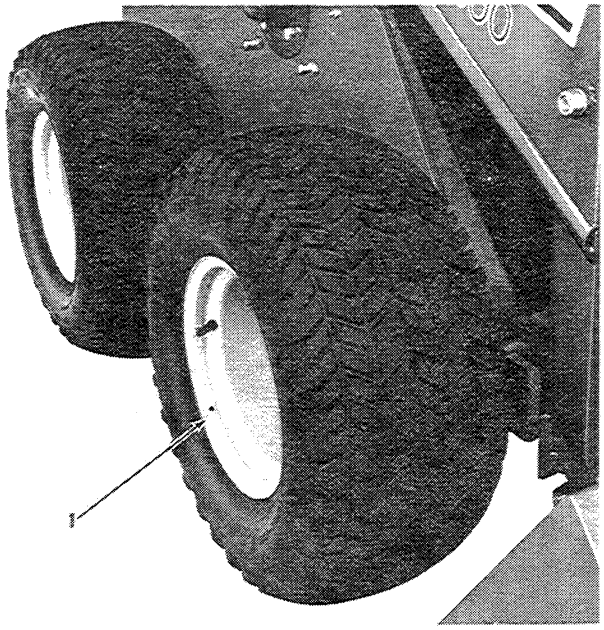

RELIEF VALVE
(Used before Serial No. 2243)

Ref. No.	Part No.	Part Name	No. Req.
1	600475	90° Swivel Elbow - 1/2 x 1/2	2
2	600510	Relief Valve	2
3	600550	90° Elbow - 1/2 x 3/4	2
4	600551	Straight Nipple - 3/4 x 1/2	2
5	600568	Hose - 1/2 x 18	2

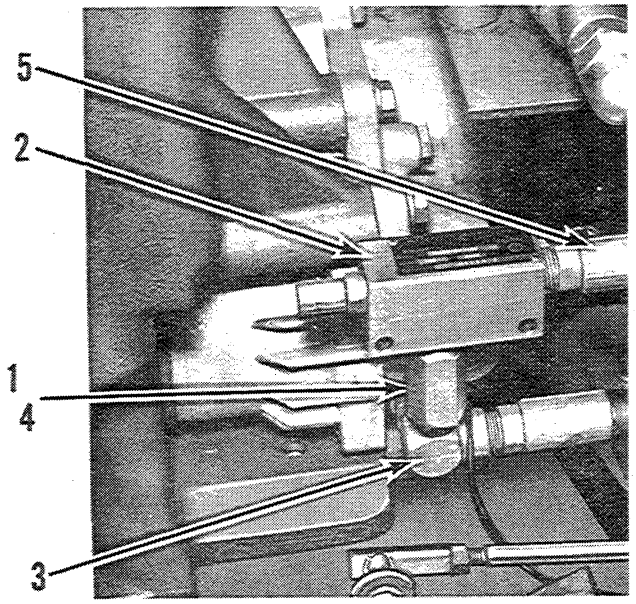

RELIEF VALVE
(Used before Serial No. 2243)

Ref. No.	Part No.	Part Name	No. Req.
1	601002	Relief Valve	2
2	601003	Straight Coupler - 1/2 x 1/2	4
3	601004	45° Elbow - 1/2 x 3/4	8

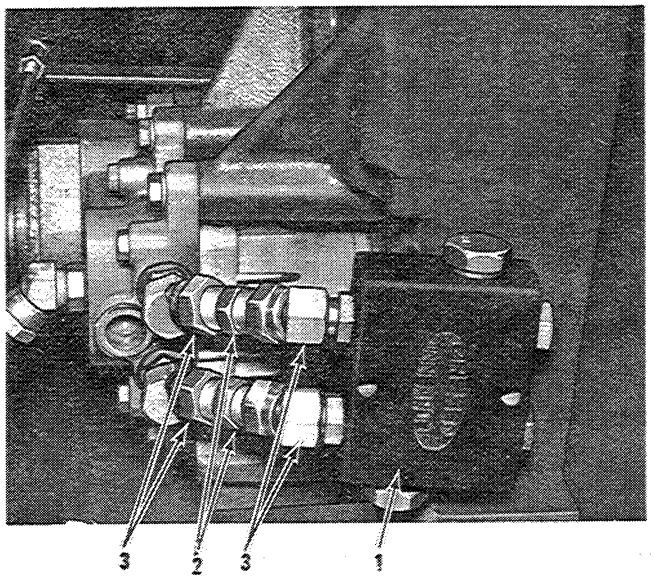

RELIEF VALVE
(Used after Serial No. 2242)

Ref. No.	Part No.	Part Name	No. Req.
1	602227	Relief Valve	2
2	602228	Hydraulic Fitting	4
3	602229	Straight Swivel Fitting	4
4	600582	"O" Ring	12

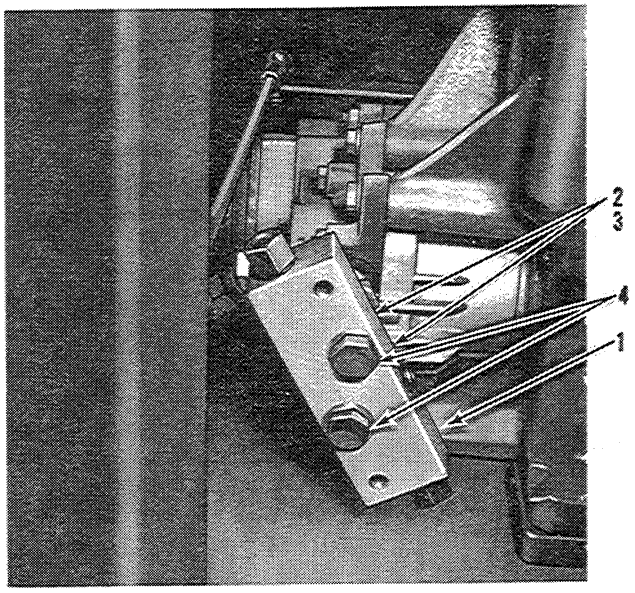

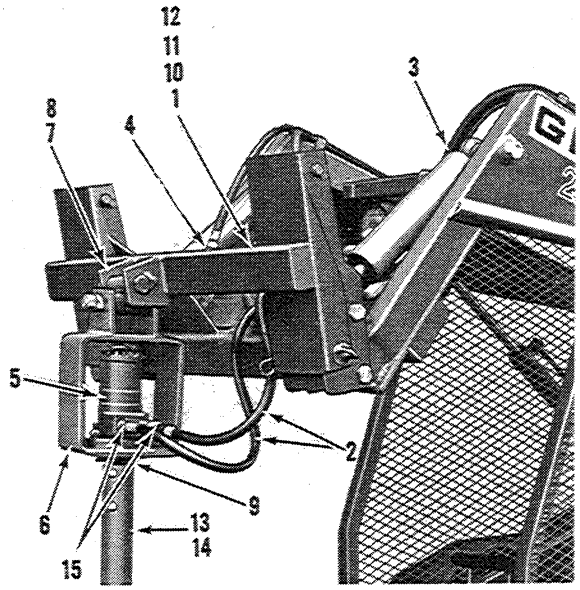

POST HOLE AUGER

Ref. No.	Part No.	Part Name	No. Req.
1	600477	90° Swivel Adapter	2
2	600481	Hydraulic Hose - 3/8 x 34	2
3	600485	Hydraulic Hose - 3/8 x 156	2
4	600534	45° Swivel Adapter	2
5	600540	Hydraulic Motor	1
6	600541	Auger Bracket	1
7	600542	Hinge Linkage	1
8	600543	Pivot Pin	2
9	600544	Auger Adapter	1
	650214	Soc. Hd. Set Screw 3/8 x 1/2	1
10	600545	Male Coupler	2
11	600546	Female Coupler	2
12	600547	Coupler Bracket	1
13	600548[A]	Auger Bit - 8" Dia.	1
14	600549[B]	Auger Bit - 12" Dia.	1
15	660046	Reducing Bushing - 1/2 x 3/8	2

[A] To Order 6" Replacement Cutting Edge, Specify Part No. 6607-225A.
[B] To Order 12" Replacement Cutting Edge, Specify Part No. 6607-226A.

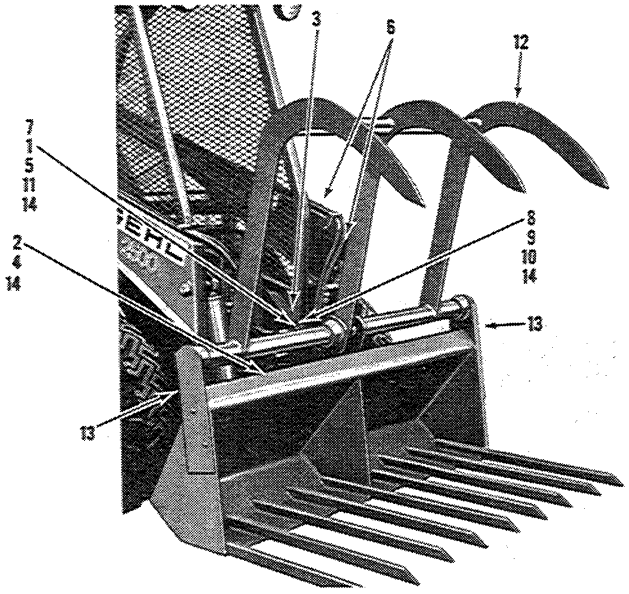

GRAPPLE FORK

Ref. No.	Part No.	Part Name	No. Req.
1	600345	Hydraulic Cylinder Bolt - 3/4 x 3-1/2 Gr. 5	1
		(1) 3/4 HN 653026 - (1) 3/4 LW 654034	
2	600357	Hydraulic Cylinder Bolt - 3/4 x 5-1/2 Gr. 5	1
		(1) 3/4 HN 653026 - (1) 3/4 LW 654034	
3	600442	Hose Clamp	8
	650005	Hex. Hd. Cap Screw 1/4 x 3/4	4
4	600479	Hydraulic Hose - 3/8 x 24	1
5	600481	Hydraulic Hose - 3/8 x 34	1
6	600485	Hydraulic Hose - 3/8 x 156	2
7	600534	45° Swivel Adapter	4
8	600545	Male Coupler	2
9	600546	Female Coupler	2
10	600547	Coupler Bracket	1
11	600565	Hydraulic Cylinder	1
12	600999	Grapple Fork	1
	650062	Hex. Hd. Cap Screw 3/8 x 1-1/4	3
		(3) 3/8 HN 653010 - (3) 3/8 LW 654026	
13	601000	Hinge	2
	650062	Hex. Hd. Cap Screw 3/8 x 1-1/4	6
		(6) 3/8 HN 653010 - (6) 3/8 LW 654026	
14	660046	Reducing Bushing - 1/2 x 3/8	4

ALWAYS GIVE MODEL AND SERIAL NUMBER WHEN ORDERING SERVICE PARTS

UTILITY BUCKET
(54" Wide - Capacity 6-3/4 Cu. Ft. Struck) (8.5 Cu. Ft. Heaped)

Ref. No.	Part No.	Part Name	No. Req.
1	600498	Utility Bucket	1

NOTE: To Order Replacement Cutting Edge, Specify Part Number 600576.

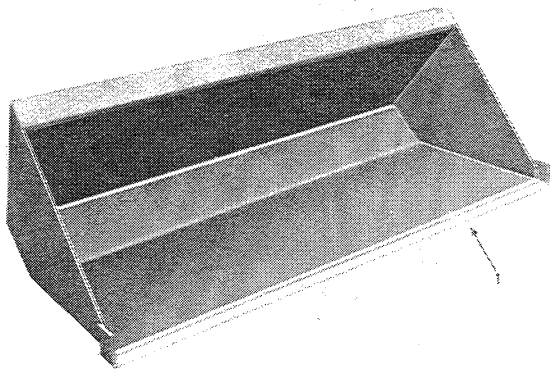

UTILITY BUCKET
(64" Wide - Capacity 6-3/4 Cu. Ft. Struck) (8.5 Cu. Ft. Heaped)

Ref. No.	Part No.	Part Name	No. Req.
1	600499	Utility Bucket	1

NOTE: To Order Replacement Cutting Edge, Specify Part Number 600579.

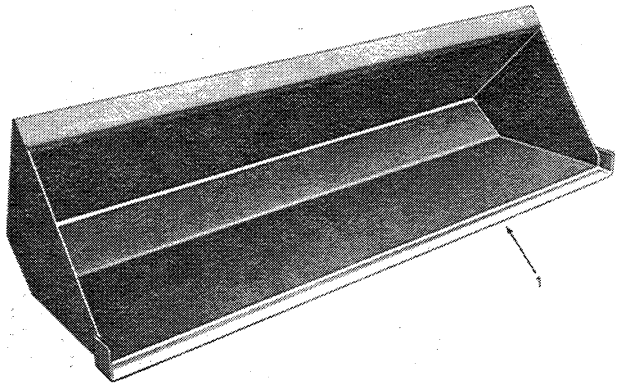

SNOW BUCKET
(72" Wide - Capacity 16 Cu. Ft. Struck) (21 Cu. Ft. Heaped)

Ref. No.	Part No.	Part Name	No. Req.
1	600502	Snow Bucket	1

NOTE: To Order Replacement Cutting Edge, Specify Part Number 600580.

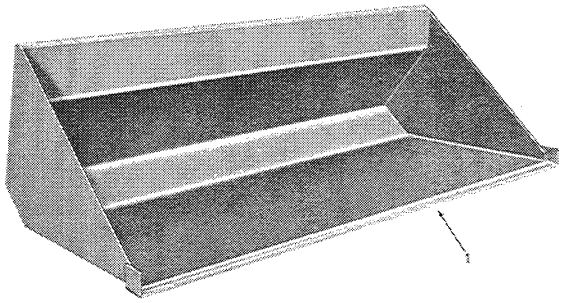

FERTILIZER BUCKET
(54" Wide - Capacity 12 Cu. Ft. Struck) (17 Cu. Ft. Heaped)

Ref. No.	Part No.	Part Name	No. Req.
1	600500	Fertilizer Bucket	1

NOTE: To Order Replacement Cutting Edge, Specify Part Number 600576.

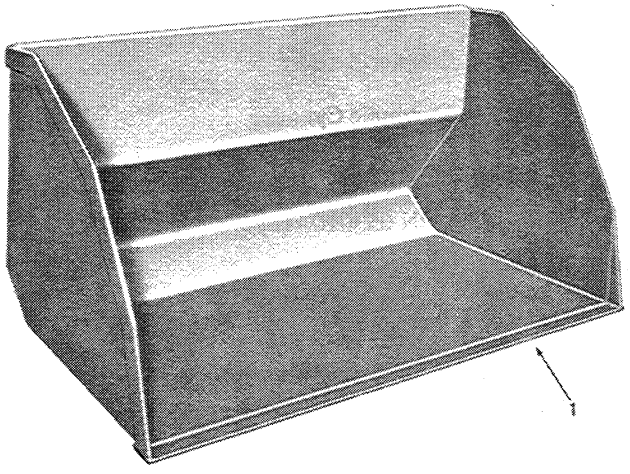

POTATO BUCKET*
(60" Wide - Capacity 10 Cu. Ft. Struck) (13 Cu. Ft. Heaped)

Ref. No.	Part No.	Part Name	No. Req.
1	600501	Potato Bucket	1

NOTE: To Order Replacement Cutting Edge, Specify Part Number 600578.

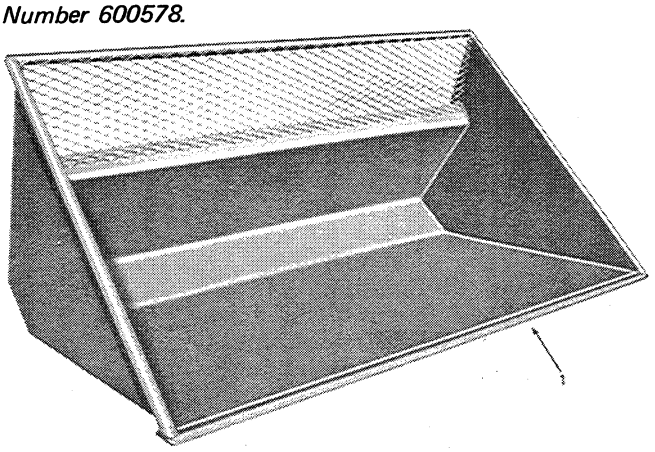

*Screen Portion is not used in determining capacity.

WARNING - Order By Part Number - Do Not Use Illustration Reference Numbers

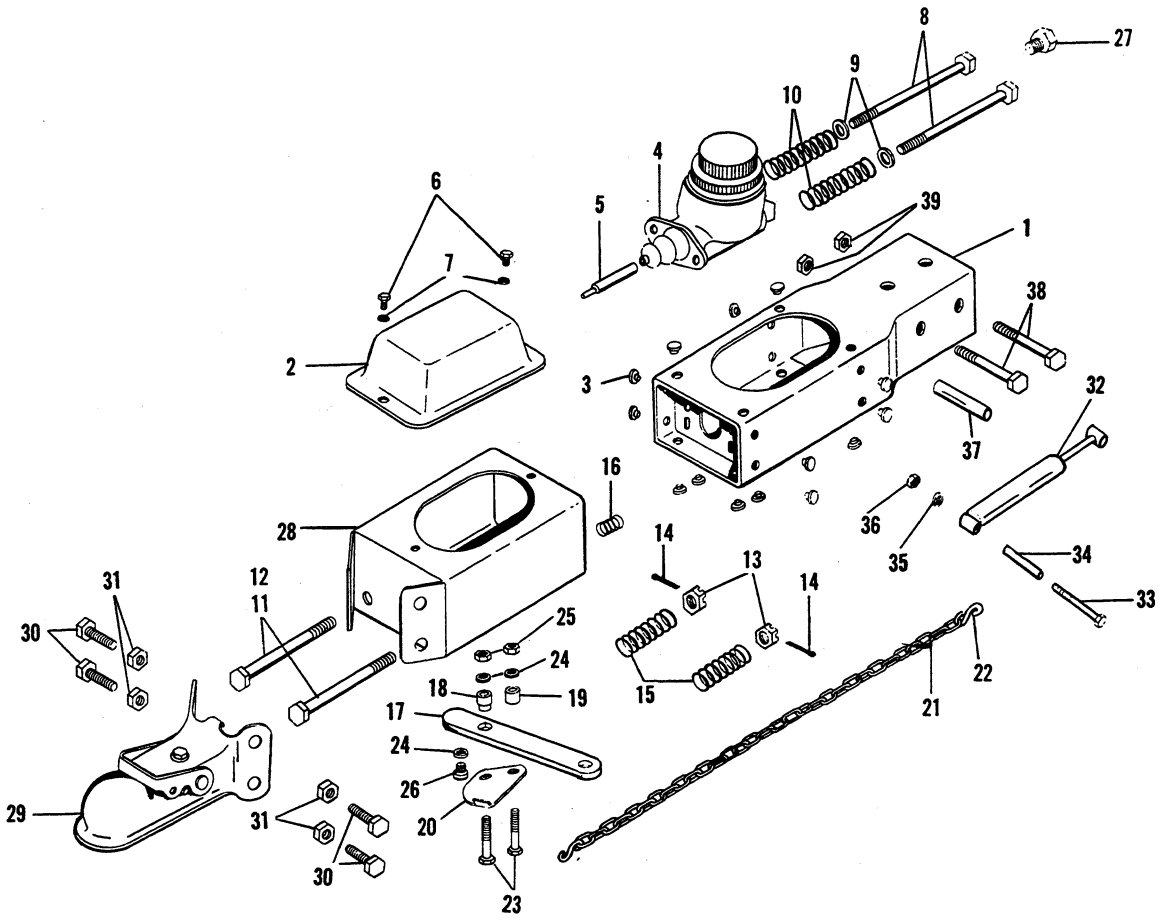

Ref. No.	Part No.	Part Name	No. Req.
1	051867	Straight Tongue Base	1
2	051868	Cover	1
3	051869	Bearing	18
4	051870	Master Cylinder	1
5	051871	Push Rod	1
6	650403	Hex. Hd. Cap Screw 1/4 x 3/8	2
7	654022	Lock Washer - 1/4	2
8	650087	Hex. Hd. Cap Screw 3/8 x 5	2
9	654006	Plain Washer - 3/8	2
10	051872	Cylinder Spring	2
11	052002	Bolt 1/2 NF x 4¼ (Drilled)	2
12	052003	Bolt 1/2 NF x 4¾ (Drilled)	2
13	653103	Hexagon Slotted Nut - 1/2 NF	2
14	655004	Cotter Pin 1/8 x 3/4	2
15	051873	Pull Spring	2
16	051874	Ground Spring	1
17	051875	Break-Away Lever	1
18	051876	Break-Away Shoulder Bushing	1
19	051877	Break-Away Collar	1
20	051878	Break-Away Lock	1
21	051879	Break-Away Chain	1
22	051880	Chain Hook	2
23	650029	Hex. Hd. Cap Screw 5/16 x 1¼	2
24	654024	Lock Washer - 5/16	3
25	653007	Hexagon Nut - 5/16	2
26	051881	Break-Away Stop	1
27	051882	Master Cylinder Connector	1
28	051885	Outer Case	1
29	051886	Coupler	1
30	650095	Hex. Hd. Cap Screw 7/16 x 1/4	4
31	653115	Hexagon Lock Nut - 7/16	4
32	051884	Damper	1
33	650312	Hex. Hd. Cap Screw 3/8 x 3	1
34	052028	Damper Tube - Front	1
35	654026	Lock Washer - 3/8	1
36	653010	Hexagon Nut - 3/8	1
37	052029	Damper Tube - Rear	1
38	650407	Hex. Hd. Cap Screw 1/2 NF x 4	2
39	653019	Hexagon Lock Nut - 1/2 NF	2

ALWAYS GIVE MODEL AND SERIAL NUMBER WHEN ORDERING SERVICE PARTS

WARNING - Order By Part Number - Do Not Use Illustration Reference Numbers

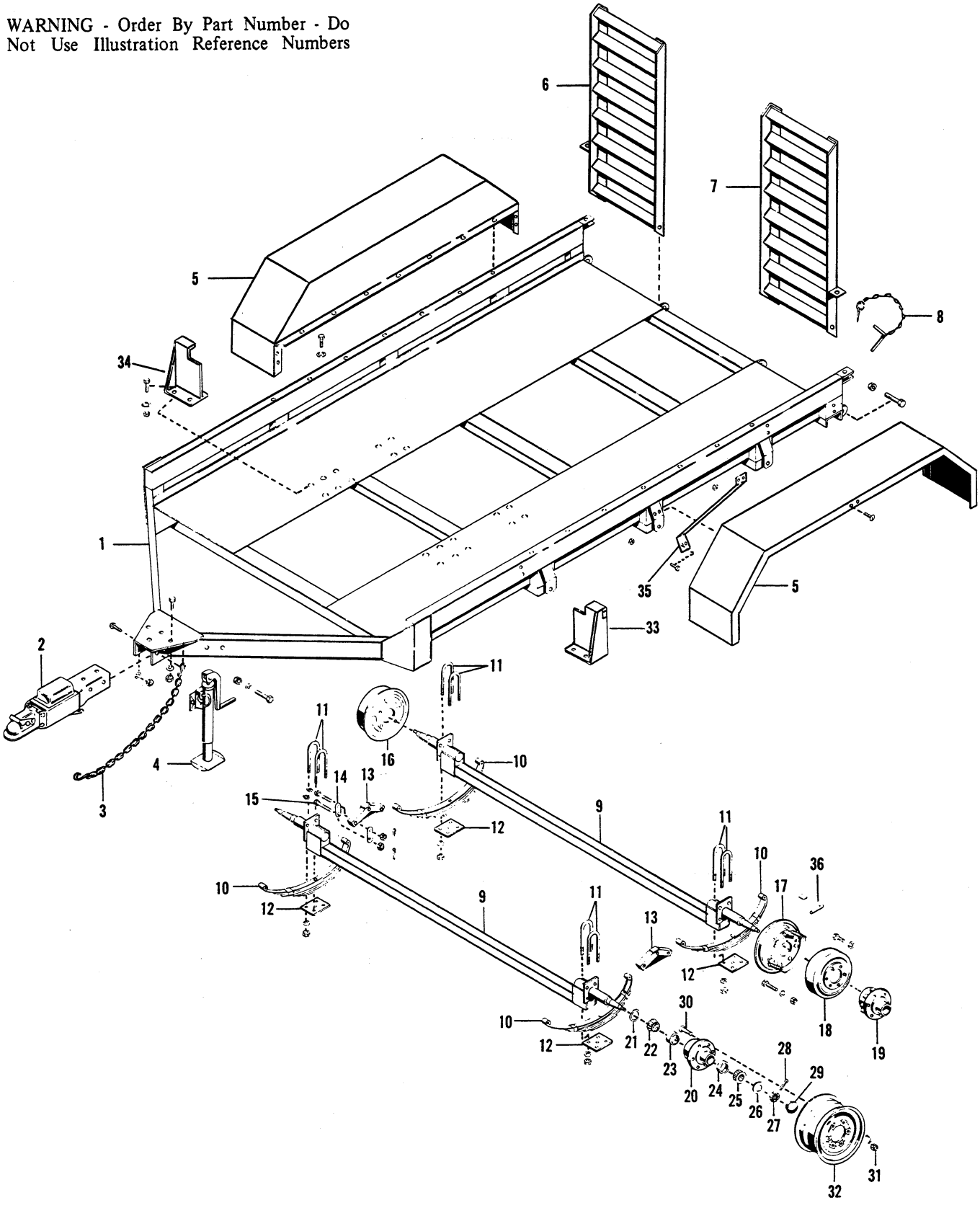

ALWAYS GIVE MODEL AND SERIAL NUMBER WHEN ORDERING SERVICE PARTS

Ref. No.	Part No.	Part Name	No. Req.
1	051645	Main Frame	1
2	051646[A]	Hydraulic Actuator	1
	650109	Hex. Hd. Cap Screw 1/2 x 1½	6
	654030	Lock Washer - 1/2	8
	653018	Hexagon Nut - 1/2	8
3	051647	Safety Chain	2
	650397	Hex. Hd. Cap Screw 3/8 x 1½ Gr. 5	2
	654006	Plain Washer - 3/8	2
	653075	Hexagon Lock Nut - 3/8	2
4	051648	Jack	1
	650121	Hex. Hd. Cap Screw 1/2 x 3	2
5	051649	Fender	2
	650060	Hex. Hd. Cap Screw 3/8 x 1	22
	654026	Lock Washer - 3/8	22
6	051650	Ramp - Right	1
	650402	Hex. Hd. Cap Screw 5/8 NF x 1½	2
	653079	Hexagon Lock Nut - 5/8 NF	2
7	051651	Ramp - Left	1
	650402	Hex. Hd. Cap Screw 5/8 NF x 1½	2
	653079	Hexagon Lock Nut - 5/8 NF	2
8	051652	Ramp Lock Pin and Chain	2
9	051653	Axle	2
10	051654	Spring	4
11	051655	Spring U-Bolt	8
	654032	Lock Washer - 5/8	16
	653020	Hexagon Nut - 5/8	16
12	051656	Spring Mounting Plate	4
13	051657	Equalizer Bar	2
14	051658	Shackle Link	8
15	051659	Shackle Bolt 9/16 NF x 3¼	14
	653107	Hexagon Slotted Nut - 9/16 NF	14
	655008	Cotter Pin 1/8 x 1¼	14
	570004	Grease Fitting	14
16	051660	Brake Assembled - Right	1
	650380	Hex. Hd. Cap Screw 3/8 NF x 1	5
	654026	Lock Washer - 3/8	5
	653013	Hexagon Nut - 3/8 NF	5
17	051661	Brake Assembled - Left	1
	650380	Hex. Hd. Cap Screw 3/8 NF x 1	5
	654026	Lock Washer - 3/8	5
	653013	Hexagon Nut - 3/8 NF	5
18	051662	Brake Drum 12 x 2	2
	650103	Hex. Hd. Cap Screw 1/2 NF x 1	12
	654030	Lock Washer - 1/2	12
19	051663	Brake Hub (Includes Studs and Cups)	2
20	051664	Wheel Hub (Includes Studs and Cups)	2
21	041797	Grease Seal	4
22	042163	Inside Bearing Cone	4
23	042162	Inside Bearing Cup	4
24	520054	Outside Bearing Cup	4
25	520201	Outside Bearing Cone	4
26	048373	Spindle Washer	4
27	653088	Spindle Nut - 3/4 NF	4
28	655018	Cotter Pin 3/16 x 1¼	4
29	045999	Grease Cap	4
30	041879	Wheel Stud	24
31	041880	Wheel Nut	24
32	045989	Drop Center Wheel - 15 x 6	4
33	051665[B]	Equipment Bracket - Left (Used before Serial No. 1332)	1
	602074	Equipment Bracket - Left (Used after Serial No. 1331)	1
	650109	Hex.Hd.Cap Screw 1/2 x 1-1/2 (4) 1/2 HN 653018 - (4) 1/2 LW 654030	4
34	051666[C]	Equipment Bracket - Right (Used before Serial No. 1332)	1
	602073	Equipment Bracket - Right (Used after Serial No. 1331)	1
	650109	Hex.Hd.Cap Screw 1/2 x 1-1/2 (4) 1/2 HN 653018 - (4) 1/2 LW 654030	4
35	052026	Fender Brace	2
	650269	Truss Head Screw 5/16 x 3/4	4
	650060	Hex. Hd. Cap Screw 3/8 x 1	4
	653073	Hexagon Lock Nut - 5/16	4
	653075	Hexagon Lock Nut - 3/8	4
36	052027	Brake Adjustment Tool	1

[A] See Page 23 For Actuator Service Parts.

[B] For Replacement, Order 602074.

[C] For Replacement, Order 602073.

ALWAYS GIVE MODEL AND SERIAL NUMBER WHEN ORDERING SERVICE PARTS

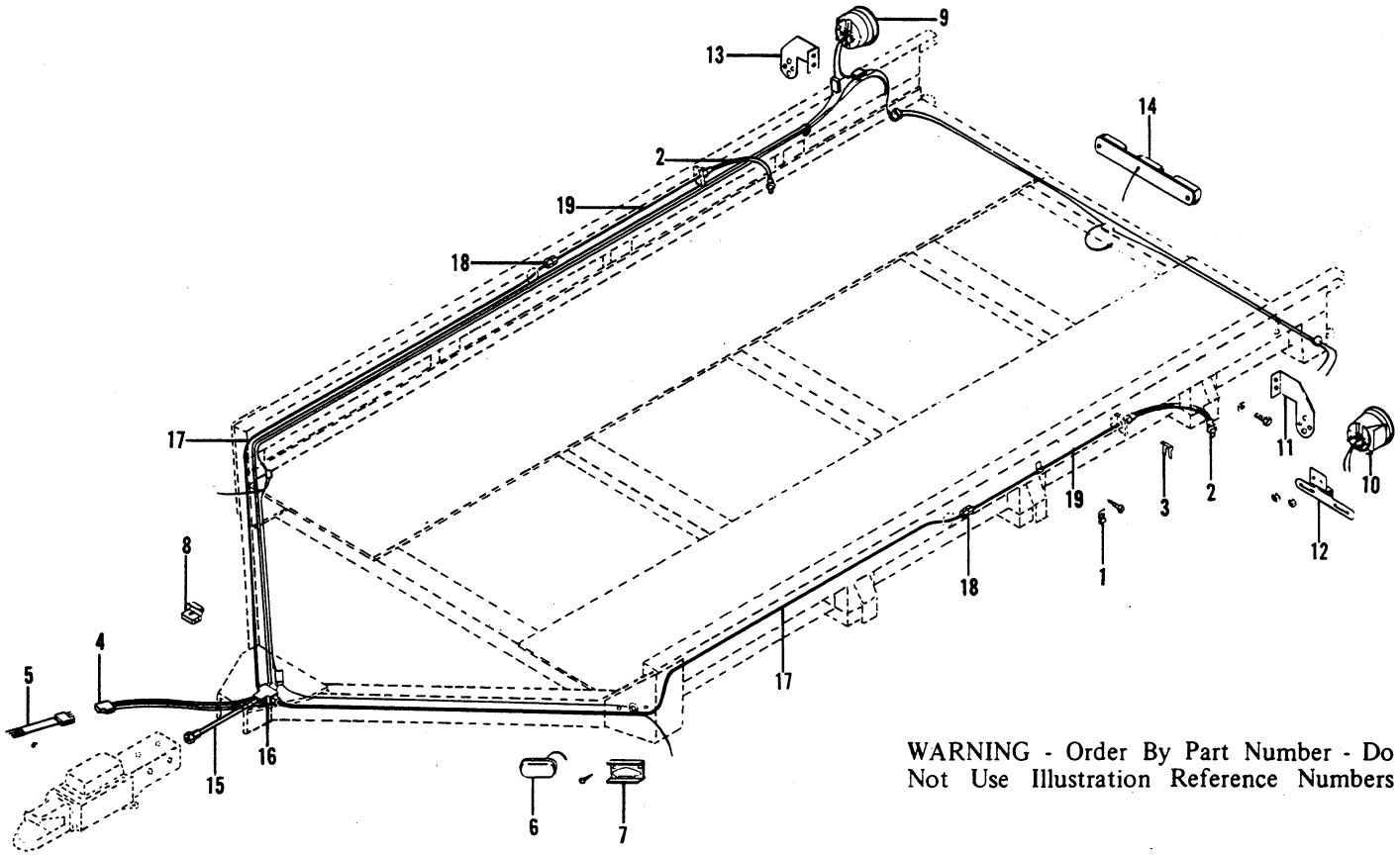

WARNING - Order By Part Number - Do Not Use Illustration Reference Numbers

Ref. No.	Part No.	Part Name	No. Req.
1	051667	Tube Clip w/Screw	2
2	051668	Brake Hose - 13"	2
3	051669	Hose Retaining Clip	2
4	051670	3 Wire Cord and Plug	1
5	051671	3 Wire Trunk Extension	1
6	051672[A]	Amber Clearance Light	2
7	051673	Clearance Light Guard	2
8	051674	Wire Splicer	3
9	051675[B]	Tail Light - Right Rear	1
10	051676[B]	Tail Light w/License Light - Left Rear	1
11	051677	Tail Light Bracket - Left Rear	1
12	051678	License Plate Bracket	1
13	051679	Tail Light Bracket - Right Rear	1
	650060	Hex. Hd. Cap Screw 3/8 x 1 (4) 3/8 LW 654026	4
14	051680[C]	Indentification Lamp	1
15	051681	Actuator Brake Hose	1
16	051682	Tee - 3/16"	1
17	051683	Brake Line 3/16 x 107	2
18	051684	Tube Coupling	2
19	051685	Brake Line - 3/16 x 30½	2

[A] To Order Amber Clearance Light Lens, Specify Part Number 053179.
[B] To Order Red Tail Light Lens, Specify Part Number 053180.
[C] To Order Red Identification Light Lens, Specify Part Number 053178.

ALWAYS GIVE MODEL AND SERIAL NUMBER WHEN ORDERING SERVICE PARTS

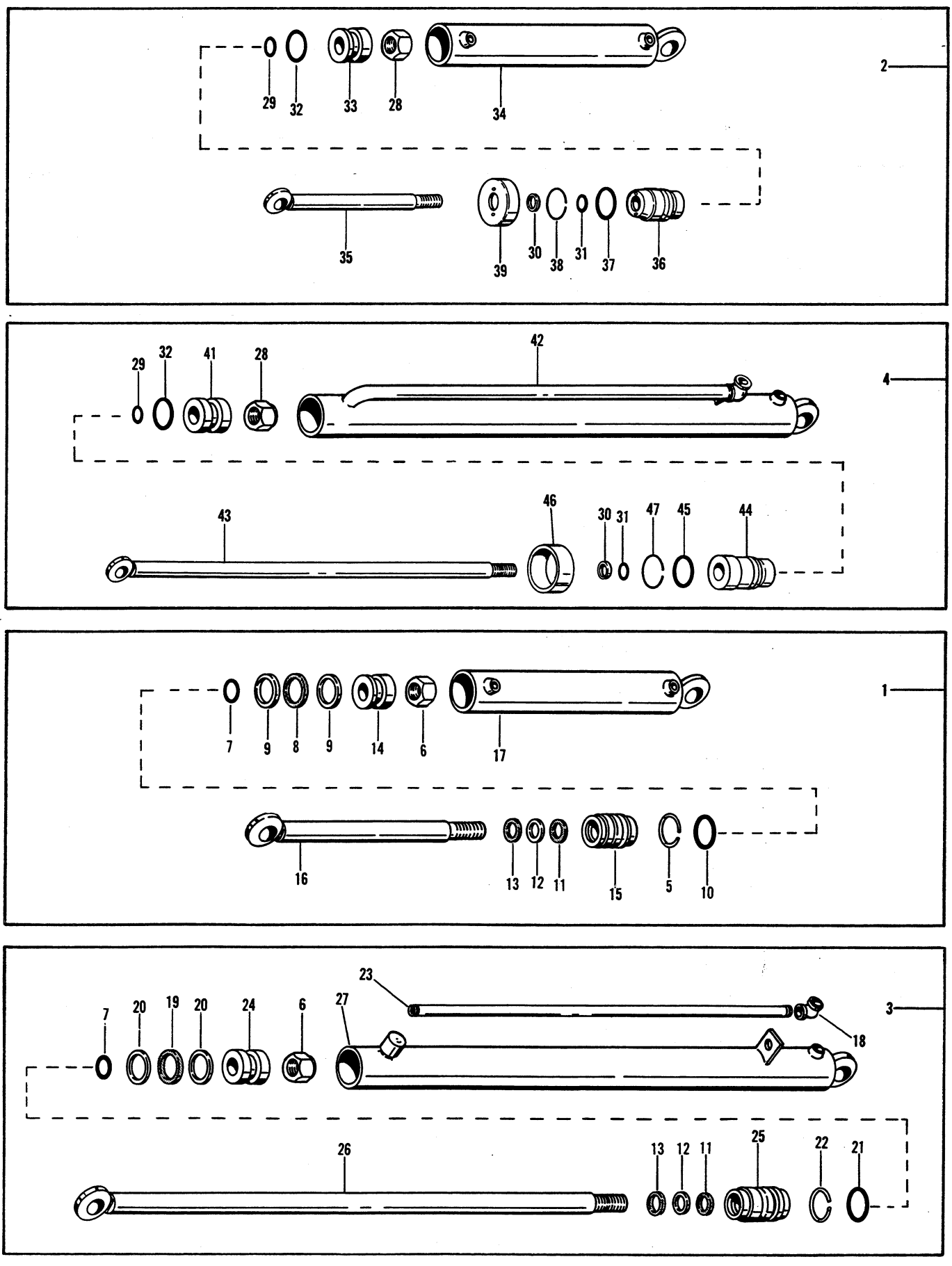
2
29
32
33
28
34
35
39
30
38
31
37
36
4
29
32
41
28
42
43
46
30
31
47
45
44
1
7
9
8
9
14
6
17
16
13
12
11
15
5
10
3
7
20
19
20
24
6
27
23
18
26
13
12
11
25
22
21

HL2500 - HYDRAULIC CYLINDER

Ref. No.	Part No.	Part Name	No. Req.
1	600465[A]	Tilt Cylinder (Used before Serial No. 2256)	2
2	602256[B]	Tilt Cylinder (Used after Serial No. 2255)	2
3	600466[C]	Lift Cylinder (Used before Serial No. 2257)	2
4	602266[D]	Lift Cylinder (Used after Serial No. 2256)	2
5	602180	Retaining Ring	1
6	602181	Retainer Nut	1
7	602182	Piston to Shaft "O" Ring	1
8	602183	Piston "O" Ring	1
9	602184	Piston Back-up Washer	2
10	602185	Packing Head to Tube "O" Ring	1
11	602186	Shaft "O" Ring	1
12	602187	Shaft Seal Back-up Washer	1
13	602188	Dirt Wiper	1
14	602189	Piston	1
15	602190	Cylinder Head	1
16	602191	Shaft	1
17	602192	Cylinder Tube	1
18	602193	Hydraulic Line Elbow	1
19	602194	Piston "O" Ring	1
20	602195	Piston Back-up Washer	2
21	602196	Packing Head to Tube "O" Ring	1
22	602197	Retaining Ring	1
23	602198	Hydraulic Line	1
24	602199	Piston	1
25	602200	Cylinder Head	1
26	602201	Shaft	1
27	602202	Cylinder Tube	1
28	602243	Piston Rod Lock Nut	1
29	602244	O - Ring	1
30	602245	Rod Wiper	1
31	602246	O - Ring	1
32	602247	O - Ring	1
33	602248	Piston	1
34	602249	Cylinder Tube	1
35	602250	Piston Rod	1
36	602251	Sleeve	1
37	602252	O - Ring	1
38	602253	Lock Wire	1
39	602254	Cap	1
	650615	Hex.Hd.Cap Screw ¼ NF x 5/8 Gr. 5	2
		(2) 1/4 External Tooth Lock Washer 650616	
40	602257	O - Ring	1
41	602258	Piston	1
42	602259	Cylinder Tube	1
43	602260	Piston Rod	1
44	602261	Cylinder Head	1
45	602262	O - Ring	1
46	602263	Band	1
47	602264	Lock Wire	1

[A] To Service Tilt Cylinder, Order Seal Kit No. 600467.
[B] To Service Tilt Cylinder, Order Seal Kit No. 602255.
[C] To Service Lift Cylinder, Order Seal Kit No. 600468.
[D] To Service Lift Cylinder, Order Seal Kit No. 602265.

HL2500 - HYDRAULIC GEAR PUMP

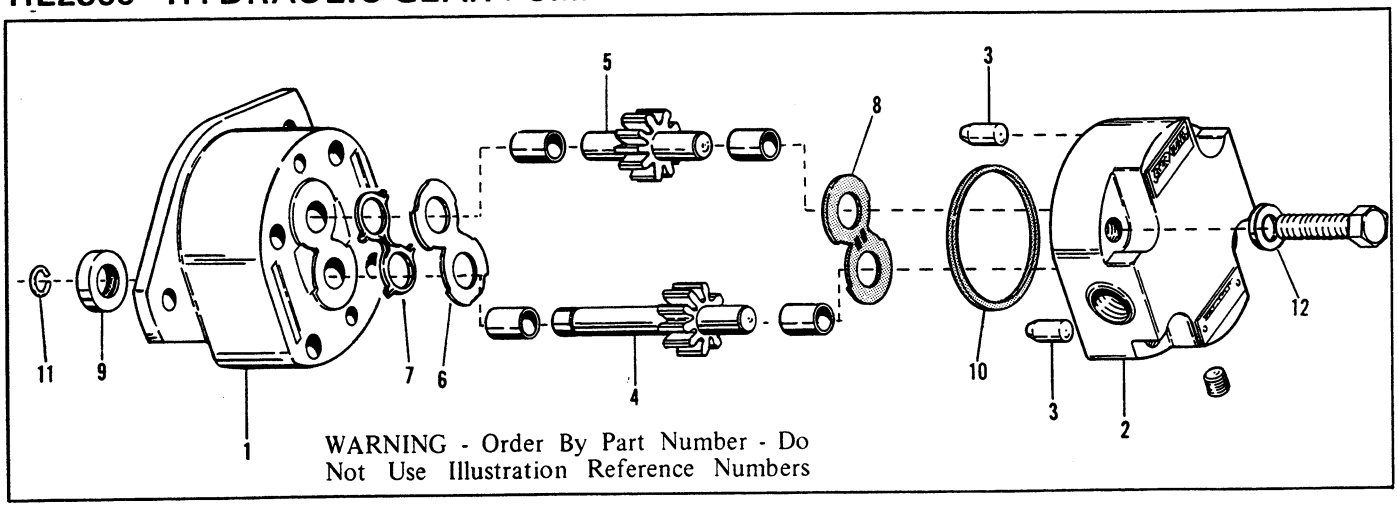

WARNING - Order By Part Number - Do Not Use Illustration Reference Numbers

Ref. No.	Part No.	Part Name	No. Req.
1	602214	Body	1
2	602215	Cover	1
	650579	Hex.Hd.Cap Screw 3/8 x 1¾ Gr.5	4
3	602216	Dowel Pin	2
4	602217	Drive Gear	1
	655501	Woodruff Key 5/32 x 5/8	1
5	602218	Driven Gear	1
6	602219	Wear Plate	1
7	602220	Pressure Loading Seal	1
8	602221	Thrust Plate	1
9	602222	Shaft Seal	1
10	602223	Gasket Seal	1
11	602224	Snap Ring	1
12	602226	Washer	4

NOTE: To order Pump Seal Kit, Specify Part No. 602225.

ALWAYS GIVE MODEL AND SERIAL NUMBER WHEN ORDERING SERVICE PARTS

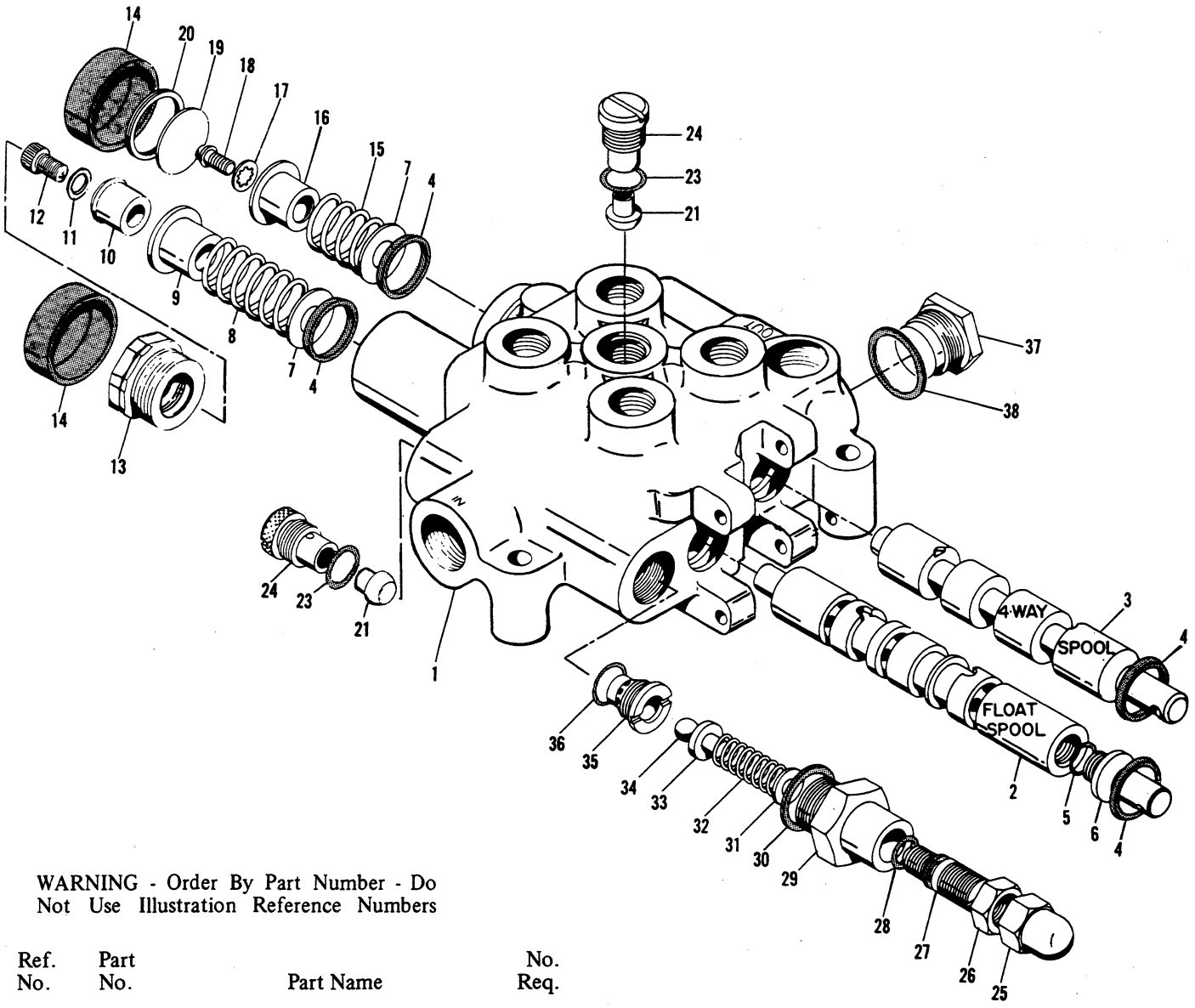

WARNING - Order By Part Number - Do Not Use Illustration Reference Numbers

Ref. No.	Part No.	Part Name	No. Req.
	047480	Lift/Tilt Valve Assembled	1
1	047707	Housing*	1
2	047709	4 Way Float Spool*	1
3	047708	4 Way Spool*	1
4	580030	Seal	4
5	600383	Float Spool Adapter Seal	1
6	600382	Float Spool Adapter	1
7	580039	Stop Washer	2
8	047712	Float Centering Spring	1
9	047711	Float Spring Collar	1
10	047724	Detent Plunger	1
11	047723	Lock Washer	1
12	047722	Cap Screw	1
13	047721	Detent	1
14	580033	Rubber Bonnet	2
15	047710	Centering Spring	1
16	047699	Stop Collar	1
17	580040	Centering Spring Lock Washer	1
18	580006	Spring Bolt Assembled	1
19	580013	Stop Disc	1
20	580015	Snap Ring	1
21	580043	Check Poppet	2
23	580038	O-Ring	2
24	580044	Check Ball Plug	2
25	580035	Acorn Cap	1
26	580034	Jam Nut	1
27	580024	Adjusting Screw	1
28	580025	O-Ring	1
29	580023	Relief Valve Body	1
30	580022	Gasket	1
31	047727	Relief Spring Washer	1
32	047726	Relief Spring	1
33	047725	Ball Spacer	1
34	047701	Relief Valve Ball	1
35	047713[A]	Relief Valve Seat	1
36	580042	O-Ring	1
37	047714	Conversion Plug	1
38	047715	Gasket	1
	047736	Seal Kit (Includes Item 4 and Seal Tool)	

[A] For Replacement, Order 047700.

*Housing and Spools may not be ordered as separate items. All Spools are fitted to individual Housings at Factory.

ALWAYS GIVE MODEL AND SERIAL NUMBER WHEN ORDERING SERVICE PARTS

HL2500 - HYDRAULIC CONTROL VALVE

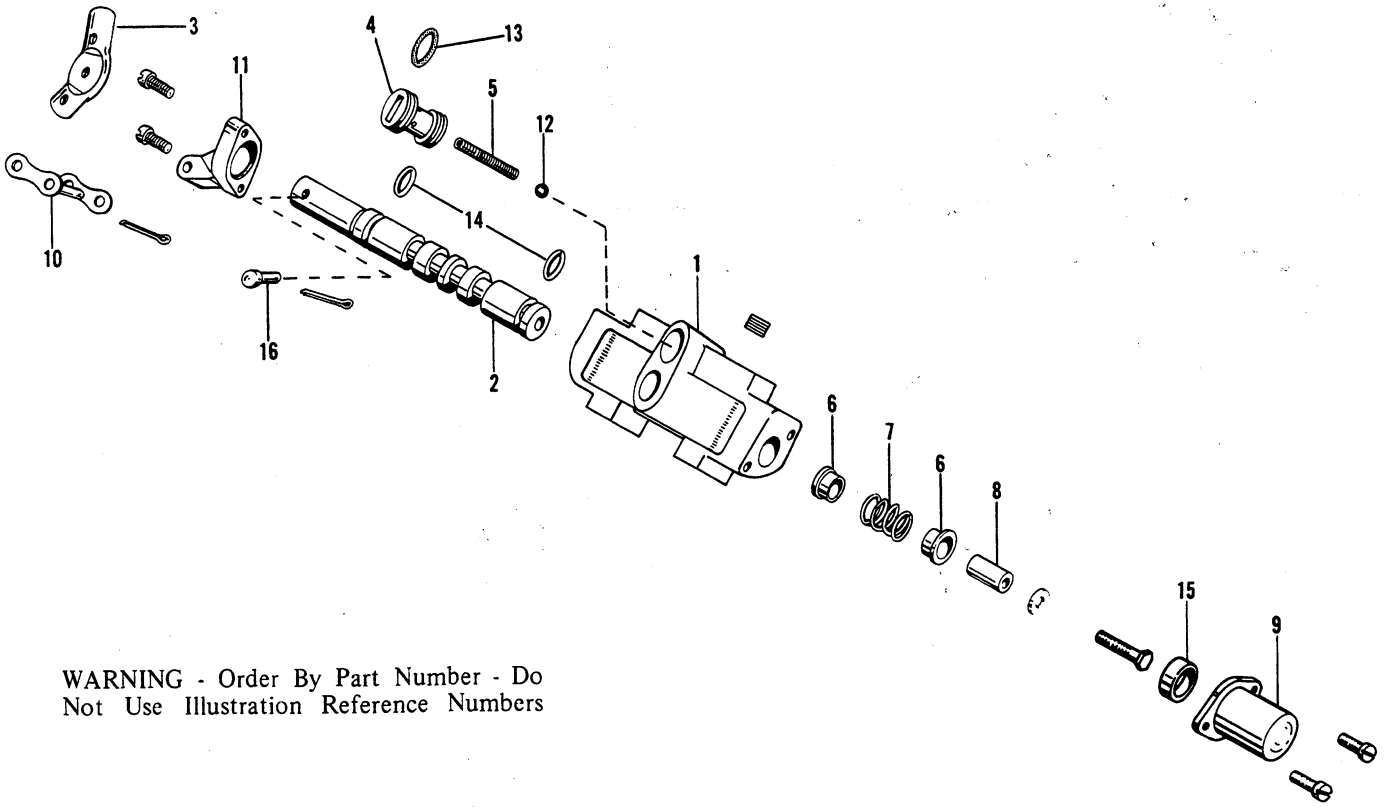

WARNING - Order By Part Number - Do Not Use Illustration Reference Numbers

Ref. No.	Part No.	Part Name	No. Req.
1	602125	Control Valve Body	1
2	602126	Valve Spool	1
	650032	Hex. Hd. Cap Screw 5/16 x 1-1/2 (1) 5/16 PW 654004	1
3	600554	Control Lever	1
4	602128	Adjustment Screw	1
5	602129	Relief Valve Spring	1
6	602130	Valve Spool Stop	2
7	602131	Valve Spool Spring	1
8	602132	Spool Spacer	1
9	602133	Spring Cover	1
10	602134	Chain Link	1
11	602135	Control Lever Bracket	1
12	666000	Steel Ball - 5/16 Dia.	1
13	602136	"O" Ring - 7/8" I.D. x 1" O.D.	1
14	602137	Valve Spool Packing - 5/8" I.D. x 7/8" O.D.	2
15	602138	Spacer	1
16	602139	Clevis Pin - 1/4" x 1"	1
	655002	Cotter Pin 3/32 x 5/8	1

ALWAYS GIVE MODEL AND SERIAL NUMBER WHEN ORDERING SERVICE PARTS

WARNING - Order By Part Number - Do Not Use Illustration Reference Numbers

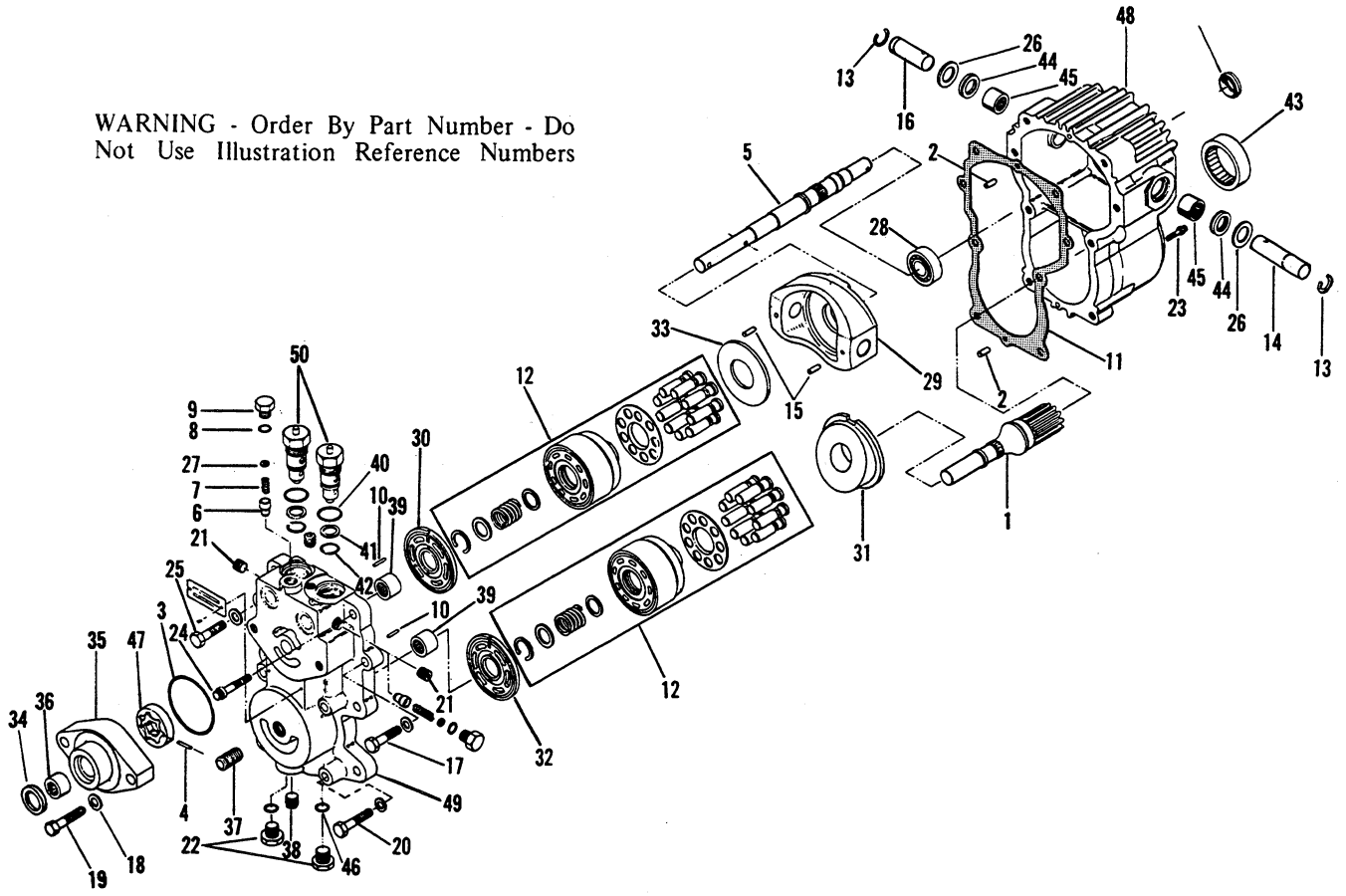

Ref. No.	Part No.	Part Name	No. Req.
1	602075	Motor Shaft	1
2	602076	Straight Headless Pin	2
3	602078	"O" Ring	1
4	602080	Straight Headless Pin	1
5	602081	Pump Shaft	1
6	602082	Relief Valve Cone	1
7	602083	Relief Valve Spring	1
8	602084	"O" Ring	1
9	602085	Plug	1
10	602086	Straight Headless Pin	2
11	602087	Housing Gasket	1
12	602088	Cylinder Block Kit	2
13	602089	Retaining Ring	2
14	602090	Trunnion Shaft	1
15	602091	Spring Pin	3
16	602092	Trunnion Shaft	1
17	602094	Hexagon Head Cap Screw	1
18	602095	Plain Washer	2
19	602096	Hexagon Head Cap Screw	2
20	602097	Hexagon Head Cap Screw	4
21	602099	Pipe Plug	2
22	602100	Threaded Plug	2
23	602101	12 Point Cap Screw	2
24	602102	12 Point Cap Screw	2
25	602103	Hexagon Head Cap Screw	1
26	602104	Washer	2
27	602108	Shim Pack	As Req.
28	602109	Ball Bearing	1
29	602110	Swash Plate	1
30	602111	Valve Plate - Right	1
31	602112	Variable Swash Plate	1
32	602113	Valve Plate	1
33	602114	Thrust Plate	1
34	602115	Lip Seal	2
35	602117	Charge Pump Housing	1
36	602118	Needle Bearing	1
37	602119	Filter Union	1
38	602120	Pipe Plug	1
39	602121	Needle Bearing	2
40	602423	"O" Ring	2
41	602424	Back-up Ring	2
42	602425	"O" Ring	2
43	602426	Roller Bearing	1
44	602427	Lip Seal	2
45	602428	Needle Bearing	2
46	602429	"O" Ring	2
47	602430	Rotor	1
48	602431	Housing Assembly	1
49	602432	Center Section	1
50	602433	Check Valve Assembly	2

ALWAYS GIVE MODEL AND SERIAL NUMBER WHEN ORDERING SERVICE PARTS

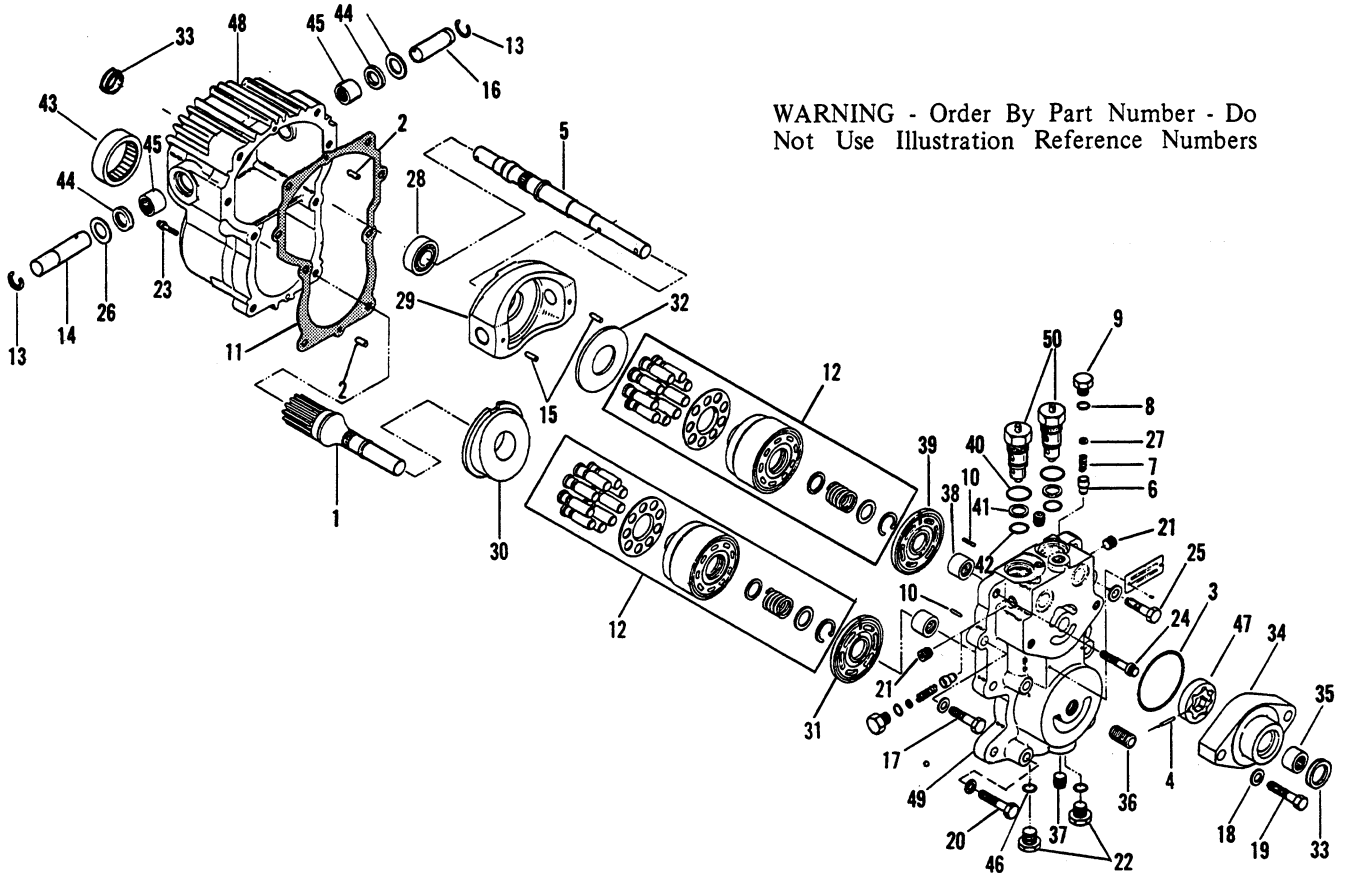

WARNING - Order By Part Number - Do Not Use Illustration Reference Numbers

Ref. No.	Part No.	Part Name	No. Req.
1	602075	Motor Shaft	1
2	602076	Straight Headless Pin	2
3	602078	"O" Ring	1
4	602080	Straight Headless Pin	1
5	602081	Pump Shaft	1
6	602082	Relief Valve Cone	1
7	602083	Relief Valve Spring	1
8	602084	"O" Ring	1
9	602085	Plug	1
10	602086	Straight Headless Pin	2
11	602087	Housing Gasket	1
12	602088	Cylinder Block Kit	2
13	602089	Retaining Ring	2
14	602090	Trunnion Shaft	1
15	602091	Spring Pin	3
16	602092	Trunnion Shaft	1
17	602094	Hexagon Head Cap Screw	1
18	602095	Plain Washer	2
19	602096	Hexagon Head Cap Screw	2
20	602097	Hexagon Head Cap Screw	4
21	602099	Pipe Plug	2
22	602100	Threaded Plug	2
23	602101	12 Point Cap Screw	2
24	602102	12 Point Cap Screw	2
25	602103	Hexagon Head Cap Screw	1
26	602104	Washer	2
27	602108	Shim Pack	As Req.
28	602109	Ball Bearing	1
29	602110	Swash Plate	1
30	602112	Variable Swash Plate	1
31	602113	Valve Plate	1
32	602114	Thrust Plate	1
33	602115	Lip Seal	2
34	602117	Charge Pump Housing	1
35	602118	Needle Bearing	1
36	602119	Filter Union	1
37	602120	Pipe Plug	1
38	602121	Needle Bearing	2
39	602123	Valve Plate - Left	1
40	602423	"O" Ring	2
41	602424	Back-up Ring	2
42	602425	"O" Ring	2
43	602426	Roller Bearing	1
44	602427	Lip Seal	2
45	602428	Needle Bearing	2
46	602429	"O" Ring	2
47	602430	Rotor	1
48	602431	Housing Assembly	1
49	602432	Center Section	1
50	602433	Check Valve Assembly	2

ALWAYS GIVE MODEL AND SERIAL NUMBER WHEN ORDERING SERVICE PARTS

Part No.	Page No.
040775	9
041797	25
041879	25
041880	25
042162	9-25
042163	9-25
045989	25
045999	25
046019	9
046023	9
047480	29
047699	29
047701	29
047707	29
047708	29
047709	29
047710	29
047711	29
047712	29
047713	29
047714	29
047715	29
047721	29
047722	29
047723	29
047724	29
047725	29
047726	29
047727	29
047736	29
048373	25
050000	
050560	9
051000	
051645	25
051646	25
051647	25
051648	25
051649	25
051650	25
051651	25
051652	25
051653	25
051654	25
051655	25
051656	25
051657	25
051658	25
051659	25
051660	25
051661	25
051662	25
051663	25
051664	25
051665	25
051666	25
051667	26
051668	26
051669	26
051670	26
051671	26
051672	26
051673	26
051674	26
051675	26
051676	26
051677	26
051678	26
051679	26
051680	26
051681	26
051682	26
051683	26
051685	26
051867	23
051868	23
051869	23
051870	23
051871	23
051872	23
051873	23
051874	23
051875	23
051876	23
051877	23
051878	23
051879	23
051880	23
051881	23
051882	23
051884	23
051885	23
051886	23
052000	
052002	23
052003	23
052026	25
052027	25
052028	23
052029	23
053000	
053328	9
053329	9
053330	9
053331	10
053332	10
053333	9
053334	9
053335	10
500000	
510263	9
520021	9
520022	9
520046	9-10
520047	10
520048	9
520054	9-25
520138	10
520201	9-25
570004	25
570014	9-11-13
580006	29
580013	29
580015	29
580022	29
580023	29
580024	29
580025	29
580030	29
580033	29
580034	29
580035	29
580038	29
580039	29
580040	29
580042	29
580043	29
580044	29
600000	
600264	9
600265	9
600268	9
600269	9
600270	7-16
600272	9
600273	9
600274	10
600275	9
600276	9
600279	9
600282	13
600283	13
600284	9
600285	9
600286	9
600345	11-21
600357	11-21
600364	11
600370	6
600371	9
600372	9
600373	9
600374	9
600375	9
600376	9
600377	9
600378	9
600379	9
600380	9
600381	9
600382	29
600383	29
600384	9
600385	9
600386	9
600387	9
600388	9
600389	9
600390	9
600391	9
600392	9
600393	9
600394	9
600395	9
600396	9
600398	10
600399	10
600400	10
600401	10
600402	10
600403	10
600404	10
600405	10
600406	10
600407	10
600408	10
600409	10
600410	10
600411	10
600412	10
600413	10
600414	10
600415	10
600416	10
600417	10
600418	10
600419	9-10
600420	5
600421	5
600422	5
600423	5
600424	5
600425	5
600426	5
600427	5
600428	5
600429	5
600430	7
600431	7
600432	7
600433	7
600434	7
600435	7
600436	7
600437	7
600438	7
600439	7
600440	7
600442	11-18-21
600443	14
600444	7-14
600445	6
600446	6
600447	6
600448	6
600449	6
600450	5
600451	5
600452	14
600453	14
600454	14
600455	14
600456	6
600457	6
600458	6
600459	6
600460	13
600461	13
600462	13
600463	13
600464	13
600465	13-17-28
600466	13-28
600469	13
600470	13
600471	13
600472	13
600473	13
600475	13-20
600476	13
600477	13-16-18-21
600478	13
600479	13-16-21
600480	13-18
600481	13-17-21
600482	13
600483	13
600484	13

HL2500 - NUMERICAL INDEX

Part No.	Page No.
600485	13-21
600486	13
600487	13
600488	13
600489	13
600490	13
600491	11
600492	11
600493	11
600494	11
600495	11
600496	17-18
600497	15
600498	22
600499	22
600500	22
600501	22
600502	22
600503	15
600504	15
600505	14
600506	14
600507	15
600508	15
600509	20
600510	20
600511	19
600512	19
600513	19
600514	19
600518	19
600519	19
600520	19
600521	19
600522	5
600523	5
600528	17-18
600529	17-18
600530	18
600532	18
600534	16-17-21
600535	18
600536	18
600537	18
600538	18
600539	18
600540	21
600541	21
600542	21
600543	21
600544	21
600545	21
600546	21
600547	21
600548	21
600549	21
600550	20
600551	20
600552	16
600553	16
600554	16-30
600555	16
600556	17
600557	17
600558	17
600559	5
600560	5
600562	17
600563	17
600564	15
600565	21
600568	20
600569	5
600570	5
600571	6
600572	18
600573	17
600574	15
600575	15
600577	6
600581	6
600582	20
600584	13
600585	18
600586	18
600990	11
600991	11
600992	5
600993	5
600994	5
600995	6
600996	6
600997	6
600998	11
600999	21
601000	21
601001	10
601002	20
601003	20
601004	20
601006	19
601007	19
601008	19
601911	9
601924	9
601925	9
601926	9
601927	9
601928	9
601988	13
601998	13
602075	31-32
602076	31-32
602078	31-32
602080	31-32
602081	31-32
602082	31-32
602083	31-32
602084	31-32
602085	31-32
602086	31-32
602087	31-32
602088	31-32
602089	31-32
602090	31-32
602091	31-32
602092	31-32
602094	31-32
602095	31-32
602096	31-32
602097	31-32
602099	31-32
602100	31-32
602101	31-32
602102	31-32
602103	31-32
602104	31-32
602108	31-32
602109	31-32
602110	31-32
602111	31
602112	31-32
602113	31-32
602114	31-32
602115	31-32
602117	31-32
602118	31-32
602119	31-32
602120	31-32
602121	31-32
602123	32
602125	30
602126	30
602128	30
602129	30
602130	30
602131	30
602132	30
602133	30
602134	30
602135	30
602136	30
602137	30
602138	30
602139	30
602142	6
602180	28
602181	28
602182	28
602183	28
602184	28
602185	28
602186	28
602187	28
602188	28
602189	28
602190	28
602191	28
602192	28
602193	28
602194	28
602195	28
602196	28
602197	28
602198	28
602199	28
602200	28
602201	28
602202	28
602203	10
602204	10
602205	10
602206	10
602207	10
602208	10
602209	10
602210	10
602211	13
602213	6
602214	28
602215	28
602216	28
602217	28
602218	28
602219	28
602220	28
602221	28
602222	28
602223	28
602224	28
602226	28
602227	20
602228	20
602229	20
602230	9
602231	9
602232	13
602234	6
602235	6
602236	6
602237	6
602238	6
602239	6
602240	6
602241	6
602242	6
602243	28
602244	28
602245	28
602246	28
602247	28
602248	28
602249	28
602250	28
602251	28
602252	28
602253	28
602254	28
602256	13-28
602257	28
602258	28
602259	28
602260	28
602261	28
602262	28
602263	28
602264	28
602266	13-28
602267	9
602423	31-32
602424	31-32
602425	31-32
602426	31-32
602427	31-32
602428	31-32
602429	31-32
602430	31-32
602431	31-32
602432	31-32
602433	31-32
650000	
650005	6-11-18-21
650019	9
650028	5
650029	9-23
650032	30
650054	9
650060	9-25-26

Part No.	Page No.
650062	21
650073	5
650087	23
650095	13-23
650103	25
650109	9-25
650121	25
650126	5
650131	5
650214	21
650250	5
650252	5
650253	9
650269	25
650285	19
650308	9
650312	11-23
650352	9
650380	25
650393	5
650396	9-13-16
650397	25
650400	6-7
650402	25
650403	23
650406	17-18
650407	23
650415	17
650433	9-15
650435	9
650448	7
650449	7
650451	5
650452	5
650453	15
650454	15
650514	9
650515	6
650516	11
650517	5
650579	28
652139	5
653005	7-9
653007	5-6-7-23
653010	5-9-10-11-16-21-23
653013	25
653015	5-13
653018	5-15-18-25
653019	23
653020	25
653026	11-17-18-21
653034	7-16
653044	5
653071	6
653073	9-25
653075	25
653079	25
653088	9-25
653089	10
653103	23
653107	25
653114	9
653115	23
653121	16
653130	11-18
654004	9-30
654006	23-25
654009	5
654022	7-9-23
654024	5-6-7-9-23
654026	5-9-10-11-13-16-21-23-25-26
654028	5-13
654030	5-9-15-17-18-25
654032	25
654034	11-17-18-21
654056	9
654057	11-17-18
655000	
655002	30
655004	9-23
655008	25
655010	9
655015	5
655018	25
655501	28
660000	
660019	13
660021	13
660039	13
660046	13-16-18-21
660049	13-16
660050	13
660059	13
660061	13-17-18
660064	13
660067	5
660080	5
660089	6
660092	18
666000	30

GEHL®

Gets into your system

GEHL COMPANY WEST BEND, WISCONSIN 53095 U.S.A.

901213/1½M1P174

Printed in U.S.A.