GEHL

Form
913293

Revision E
August
2009

CT7-23 Turbo

Telescopic Handler

Serial Number 245989 - 263523

Parts Manual

NOTE: *This parts manual identifies standard and optional features for this model. Depending on the features of your machine, some of the items identified in the parts lists may not be included with your machine.*

The Table of Contents lists the page locations of the various component groups on the machine.

When ordering service parts, specify the part number, full description, quantity required, and the unit model and serial number.

Model and serial numbers for this unit are stamped on a plate located inside the operator's station. The serial number is also stamped on the top front of the frame. "Right" and "left" are determined from a position standing behind the unit and facing the direction of travel.

Gehl Company reserves the right to make changes or improvements in the design or construction of any part of the unit without incurring the obligation to install such changes on any unit previously delivered.

Grease fittings and common attaching hardware, such as cotter pins, set screws, woodruff keys, screws and nuts are included in the parts list, indented below the part they are associated with, but NOT illustrated, except where a particular routing or special fastening arrangement must be maintained. The hardware listed is for mounting purposes and is NOT included when the part is ordered for replacement.

Standard attaching hardware torque values are provided on the inside back cover. Unless otherwise specified, all capscrews are Grade 5, cadmium or zinc plated; hexagon nuts for Grade 5 capscrews and bolts are Grade 5.

Page

Introduction

Introduction . . . . . B
Table of Contents 1

Filters

Filters and Belts 6
Hydraulic Filter Group 8

Cab

Windows - Front, Sides and Door 10
Windows - Rear and Door 12
Windows - Rear De-Icing (Option) 14
Cab - Seat Mount - Floor mat 16
Panels and Cab Mounts 18
Window Washer System - Window Shades - Air Conditioner Panels 20
Windshield Protection Grill (Option) 22
Seat 24
Interior 26
Interior Cables, Levers and Pedals 28
Parking Brake Handle 30
Joystick - Multi-function Controller 32
Steering Column and Motor 34
Air Conditioner - Housing and Blower 36
Air Conditioner - Wiring 38
Air Conditioner - Compressor and Hoses 40
Air Conditioner - Condenser and Hoses 42
Air Conditioner - Condenser Assembly 44
Heater Hose Group 46
Cab Lights 48
Dash - Electrical 52
Electrical - Fuses and Relays 54
Electrical - Main Circuit 56
Electrical - Ignition/Charging Circuit 58
Electrical - Multi-function Controller Circuit 60
Electrical - Shift Control and Warning Lights 62

Page

Chassis

Lights - Lever Switches - Sensors 64
Electrical - Trailer Light Connector 68
Electrical - Continuous Auxiliary Hydraulics 70
Hoods 72
Grease Hoses 76
Frame and Axle Mount 78

Engine

Engine - External Components 80
Fan (Standard) 82
Fan - Reversible (Option) 84
Air Intake - Exhaust 86
Cylinder Block 88
Crankshaft - Connecting Rods - Pistons 90
Cylinder Head 92
Cylinder Head - Miscellaneous 94
Rocker Arm Group 96
Valve Cover 98
Camshaft - Timing Gear and Cover 100
Oil Pump and Pan 102
Oil Cooler - Oil Filter and Housing 104
Water Pump 106
Flywheel 107
Alternator 108
Starter 109
Turbocharger 110
Exhaust Manifold 112
Gasket Set 113
Engine Block Heater 114
Radiator and Transmission Cooler 116
Radiator Shroud - Sound Suppression 118
Fuel Circuit - Fuel Tank 120
Clamps - Brackets - Miscellaneous 122

Engine / Transmission

Mounts 124
Sensors and Switches 126

Page

Transmission

Transmission and Torque Converter 128
External Components 130
Internal Components 132
Electrical Selector 134

Transfer Case

Transfer Case 136

Driveshafts

Front Driveshaft 138
Rear Driveshaft 139
Transfer Case Drive Shaft 140

Axles

Wheels 142
Fenders, Chassis Cover and Mirror 143
Brake Circuit 144
Steering Circuit 146

Front - Axle 148
Front Axle - Steering Cylinder and Tie Rods 149
Front Axle - Center Section 150
Front Axle - Differential 151
Front Axle - Outer End Group 152
Front Axle - Brakes 154

Rear Axle and Mount 156
Rear Axle - Steering Cylinder and Tie Rods 157
Rear Axle - Center Section 158
Rear Axle - Differential 159
Rear Axle - Outer End Group 160
Rear Axle - Brakes 162

Page

Boom
Outer - Inner - Carriage 164
Boom Work Lights (Option) 166

Boom Hydraulics
Hydraulic Carrier Lock 168
Lift Circuit 170
Extend Circuit 172
Tilt Circuit 174
Slave (Compensation) Circuit 176

Hydraulics
Main Circuit 178
Multi-function Controller Circuit 180

Hydraulic Components
Lift Cylinder 182
Slave (Compensation) Cylinder 184
Tilt Cylinder 186
Extend Cylinder 188
Carriage Lock Cylinder 190
Main Valve 192
Steer Select Valve 194

Hydraulic Options
Ride Control 196
Second Auxiliary Hydraulics 200

Decals 203
General Information and Applications 203
Interior Areas 204
Exterior Areas 205

Index
Numerical Index 206
Subject Index 220

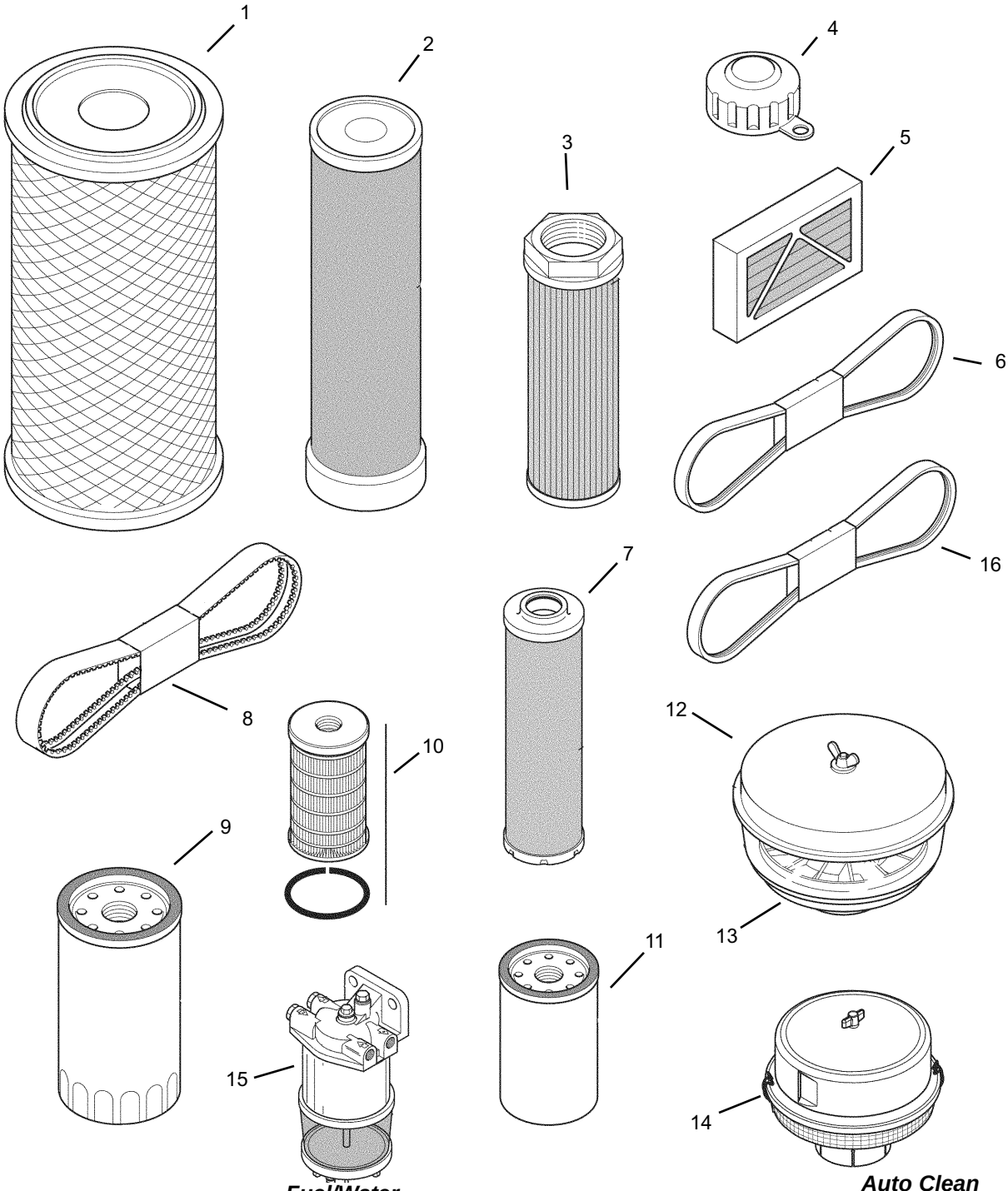

Fuel/Water Separator Pre-filter (Later Machines)

Auto Clean Pre-filter (Optional)

Ref. No.	Part No.	Description	Qty. Req.
01	219980	Air filter cartridge	1
02	219979	Safety air filter cartridge	1
03	219945	Primary strainer *(in hyd. tank)*	1
04	219937	Cap	1
05	219947	Cab air filter	1
06	219996	Alternator belt	1
07	218042	Hydraulic return oil filter	1
08	219956	Fan belt	1
09	219975	Engine oil filter	1
10	184223	Fuel Filter cartridge	1
11	219976	Transmission oil filter	1
12	218591	Pre-filter Assembly *(includes item #13)*	1
13	218635	Tank *(bowl)*, pre-filter *(included with item #12)*	1
14	215750	Auto-Clean pre-filter *(option)*	1
15[ab]	189145	Fuel/Water Separator pre-filter *(Filter, gaskets and o-rings only)*	1
16	215896	Air compressor belt *(Air conditioning)*	1
		-- ITEMS NOT SHOWN --	
00[c]	215532	In-line hydraulic filter	1

a *Includes filter (only), o-rings, and gaskets. Does not include glass bowl or mount housing.*

b *Refer to the Engine Section - Fuel Circuit for a detailed list of parts related to the fuel / water separator.*

c *Refer to the Hydraulic Section - Joystick Controllers Circuit for the location of this filter (item #37).*

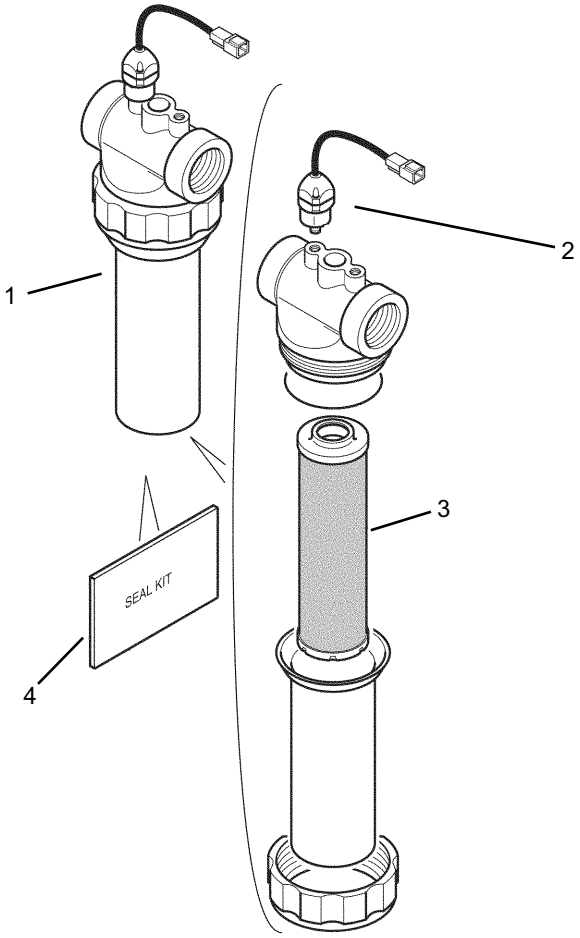

10 EA 202

Ref. No.	Part No.	Description	Qty. Req.	Ref. No.	Part No.	Description	Qty. Req.
01	218083	Hydraulic Filter Assembly	1	03	218042	Hydraulic Filter Cartridge	1
02	217796	Restriction Indicator Switch	1	04	219684	Seal Kit	1

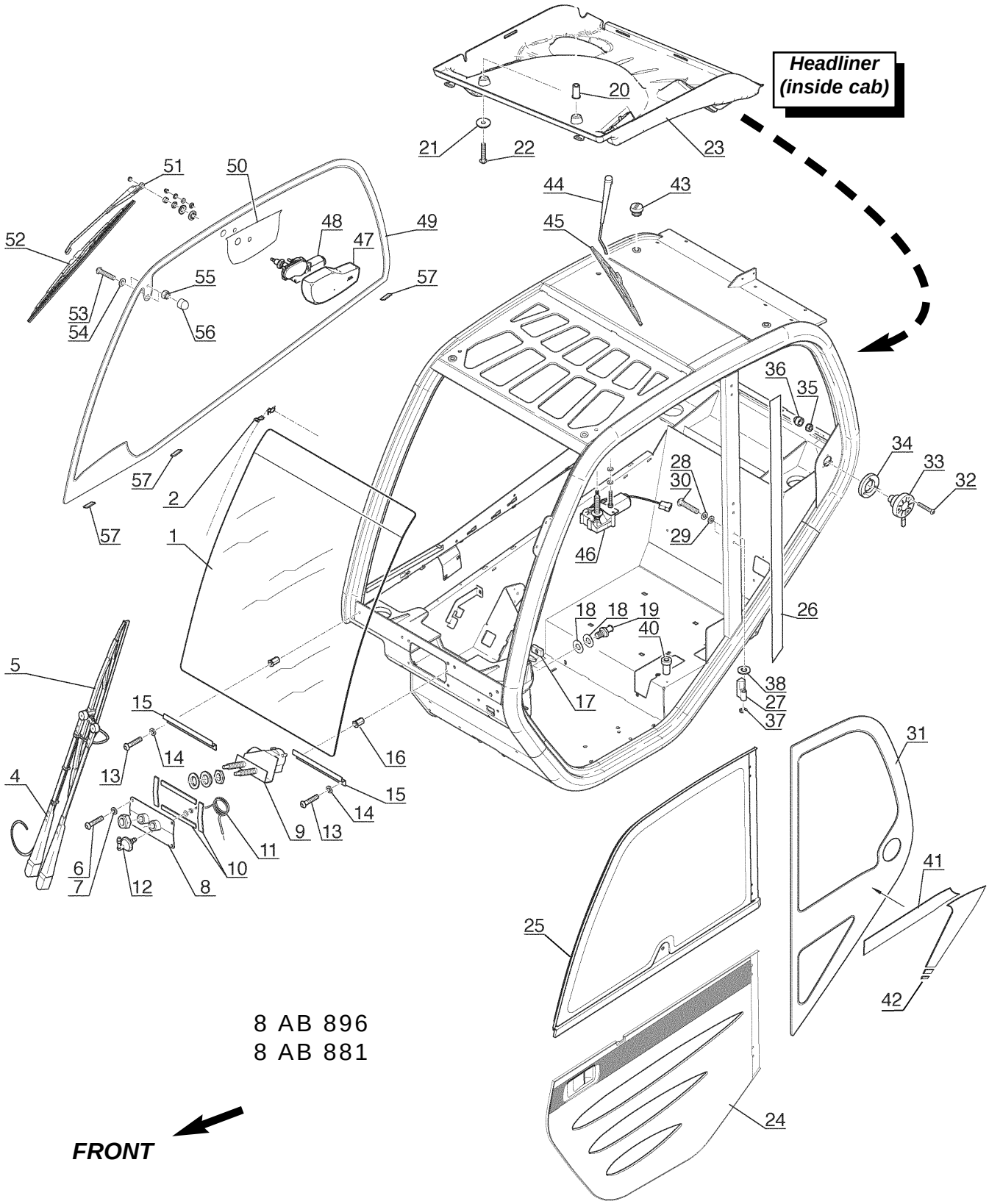

Headliner
(inside cab)
20
21
22
23
51
50
44
43
52
48
47
49
45
55
57
53
54
56
36
35
34
33
32
28
30
57
2
29
57
1
46
18
18
19
40
26
5
15
17
38
27
37
31
16
14
13
4
15
14
9
13
11
6
7
12
8
10
41
25
42
8 AB 896
8 AB 881
24
FRONT

Windows - Front, Sides and Door

Ref. No.	Part No.	Description	Qty. Req.
01	218662	Windshield *(only)*	1
02	215143	Weatherstrip	1
04	218463	Wiper Arm	1
05	218462	Windshield wiper blade	1
06	218507	Bolt, M6-20	4
07	215142	Plastic Washer	4
08	219461	Fastening plate	1
09	215141	Windshield-wiper motor	1
10	218351	Adhesive gasket	1
11	219256	Hose	1
12	218485	Adapter	1
13	218507	Bolt	4
14	215142	Plastic Washer	4
15	219463	Bracket	1
16	219464	Insert	8
17	218405	Fastening plate	1
18	218404	Washer	2
19	218403	Strike	1
20	219235	Insert	2
21	215142	Plastic Washer	2
22	218445	Bolt, M6-25	2
23[a]	215140	Headliner	1
24	215139	Lower Door *(complete)*	1
25	219467	Upper Door *(complete)*	1
26	219595	Decal, Cab Post	1
27	218424	Half Hinge	4
28	218510	Washer	8
29	219054	Washer	8
30	218447	Bolt, M8-40	8
31	215137	Window, Cab L.H.	1
32	218446	Bolt, M6-40	3
33	219651	Door Lock	1
34	219468	Shim	1
35	218344	Nut	3
36	219653	Cap	3
37	219902	Snap ring	4
38	218506	Washer	4
39	218448	Bolt, M8-45	1
40	219464	Insert	1
41	215136	Decal, Cab Window L.H.	1
42	215135	Decal, Cab Window L.H.	1
43	219339	Plug	4
44	217443	Wiper Arm	1
45	215134	Wiper Blade	1
46	217444	Wiper Motor	1
47	215133	Wiper Motor Cover	1
48	215132	Windshield Wiper Motor	1
49	215131	Window, Cab R.H.	1
50	215130	Decal, R.H. Cab Window	1
51	215129	Wiper Arm	1
52	215128	Wiper Blade *(600 mm long)*	1
53	218491	Bolt, M8-20	2
54	217484	Washer	2
55	219616	Nut, M8	2
56	217501	Cap	2
57	215127	Shim	6

-- ITEMS NOT SHOWN --
(Window Adhesive - Cleaner)

00	218396	Glue	1
00	219335	Cleaner	1

a *Refer to “Cab - Interior” for more information.*

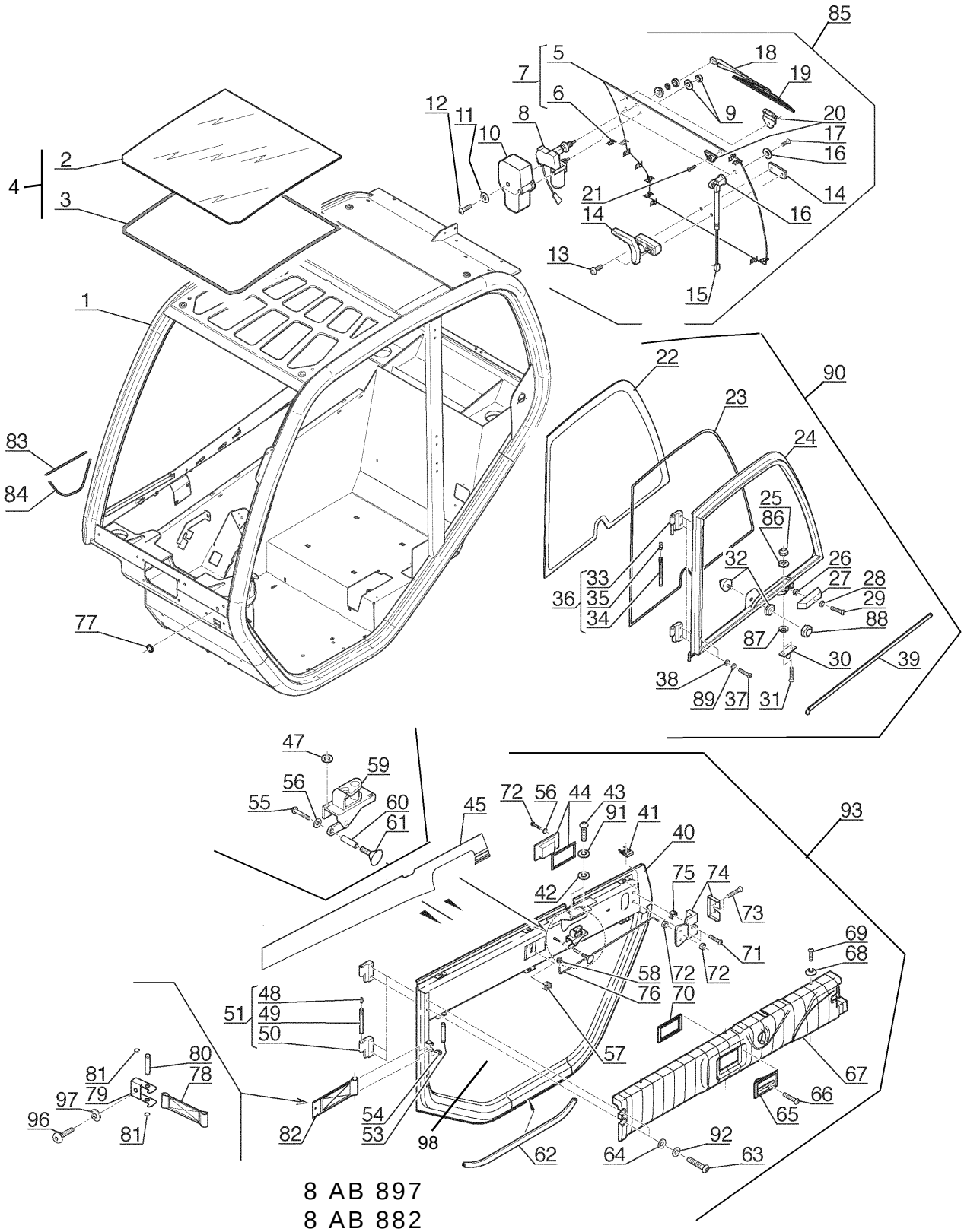

8 AB 897
8 AB 882

Ref. No.	Part No.	Description	Qty. Req.
01	215126	Cab *(weldment only)*	1
02	219664	Top Window	1
03	218399	Seal mastic	1
04	219665	Top Window & Seal Mastic	1
05	218663	Rear Window Glass	1
06	215124	Weatherstrip, Rear Window	1
07	219470	Rear Window & Weatherstrip	1
08	219471	Windshield-wiper motor	1
09	219599	Washer	1
10	219472	Housing	1
11	218467	Washer	2
12	218471	Bolt, M6-12	2
13	218471	Bolt, M6-12	2
14	218472	Handle	1
15	219243	Air Spring	2
16	219185	Spring Bracket	2
17	219473	Bolt	2
18	218480	Wiper Arm	1
19	219255	Windshield Wiper Blade	1
20	219242	Hinge	2
21	219058	Bolt, M8-20	4
22	218665	Door Glass	1
23[a]	NSS	Kit, Glue and Cleaner	1
24	219475	Upper Door Frame	1
25	219022	Nut, M6	2
26	218396	Nut	1
27	219476	Housing	1
28	218467	Plastic Washer	1
29	218409	Bolt, M6-16	1
30	219245	Striker	1
31	219029	Bolt, M6-20	2
32	219650	Door Lock	1
33	218425	Half Hinge	2
34	218487	Pin	2
35	218308	Grease Zerk	2
36	218425	Complete Hinge, L.H.	2
37	218447	Bolt, M8-40	4
38	218510	Washer	4
39	218505	Weatherstrip	1
40	217448	Lower Door, Frame	1
	218007	Glass *(not shown)*	1
41	219246	Nut	6
42	219052	Washer	2
43	218409	Bolt, M6-16	2
44	219903	Outer Lock	1
45	215123	Decal, Lower Door	1
47	218506	Washer	2
48	218308	Grease Zerk	2
49	218487	Pin	2
50	218425	Half Hinge	2
51	218425	Complete Half Hinge	2
53	219901	Pin	1
54	219902	Snap Ring	2
55	218449	Bolt, M6-30	1
56	218379	Washer	2
57	218395	Nut, M6	1
58	219150	Nut, M4	2
59	219247	Latch	1
60	219249	Spacer	1
61	219248	Plug	1
62	219259	Weatherstrip	1
63	218447	Bolt	4
64	218510	Washer	4
65	218410	Door Handle	1
66	218507	Bolt, M6-20	1
67	215122	Trim Panel, Lower Door	1
68	215142	Plastic Washer	6
69	218488	Bolt, M5-20	6
70	218411	Shim	1
71	218398	Bolt, M5-35	2
72	218415	Bolt, M5-16	1
73	218427	Bolt, M6-30	2
74	218402	Latch	1
75	218395	Nut, M6	2
76	219481	Rod	1
77	219668	Grommet	1
78	219686	Door Strap	1
79	219687	Clamp	1
80	219901	Pin	1
81	219902	Snap Ring	2
82	219688	Door Strap Kit	1
83	215121	Seal, Cab	1
84	215120	Seal, Cab	1
85	219474	Rear Window/Door *(complete)*	1
86	219052	Washer, M6	2
87	219666	Washer,	2
88	219600	Plug	1
89	219054	Washer	4
90	219467	Upper Door *(complete)*	1
91	218439	Washer, M6	2
92	219054	Washer, M8	4
93	215139	Lower Door *(complete)*	1
94	218396	Glue	AR
95	219335	Cleaner	AR
96	218448	Bolt, M8-45	1
97	219054	Washer, M8	1
98	218007	Glass, Lower Door	1

a *Order items 94 and 95.*

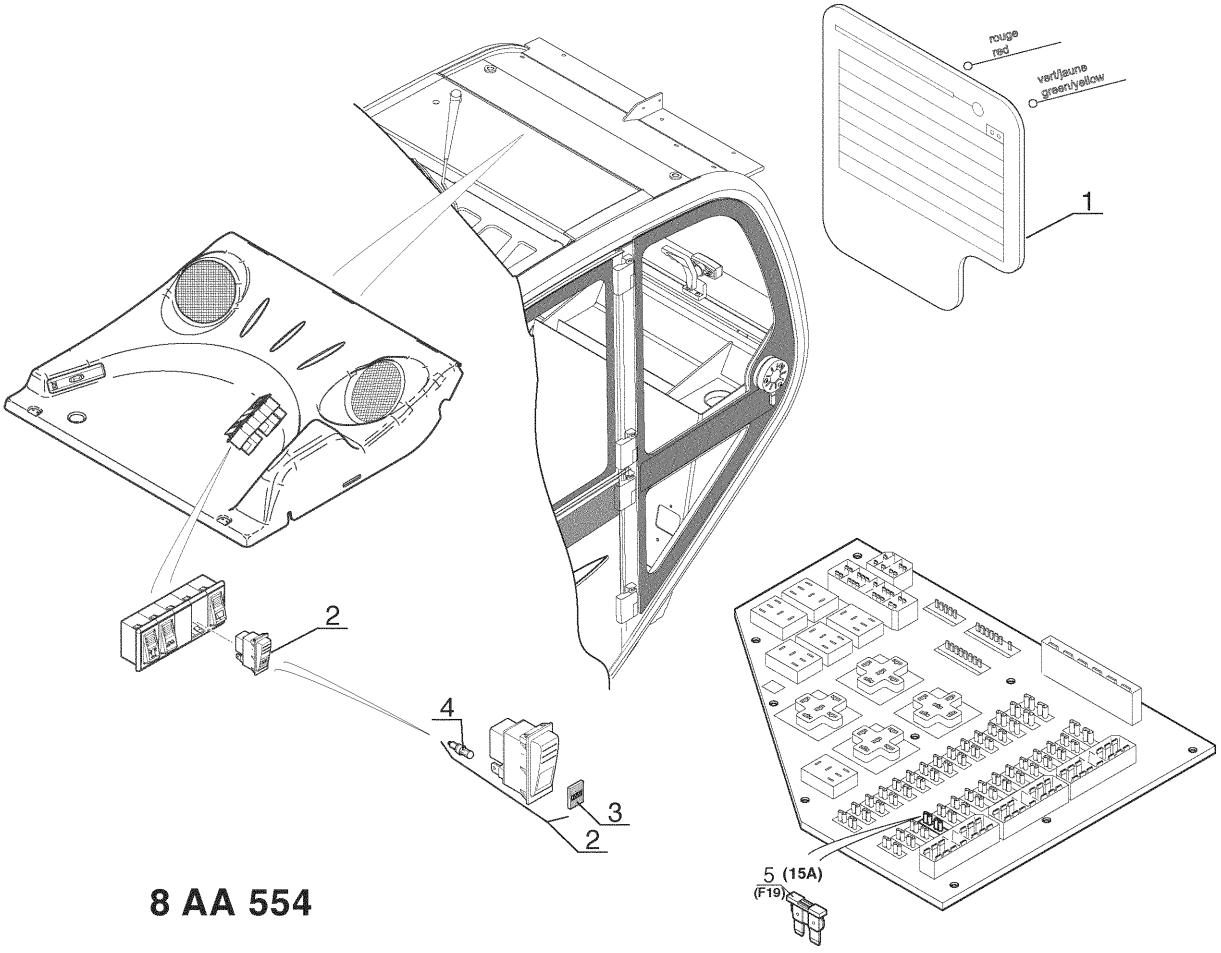
rouge
red
vert/jaune
green/yellow
1
2
4
3
2
5 (15A)
(F19)
8 AA 554

Windows - Rear De-icing (Option)

Ref. No.	Part No.	Description	Qty. Req.	Ref. No.	Part No.	Description	Qty. Req.
01	215785	Rear Window w/De-icing grid	1	04	217924	Bulb	1
02	218616	Defogging Switch	1	05	219952	Fuse (15A)	1
03	219452	Lens	1				

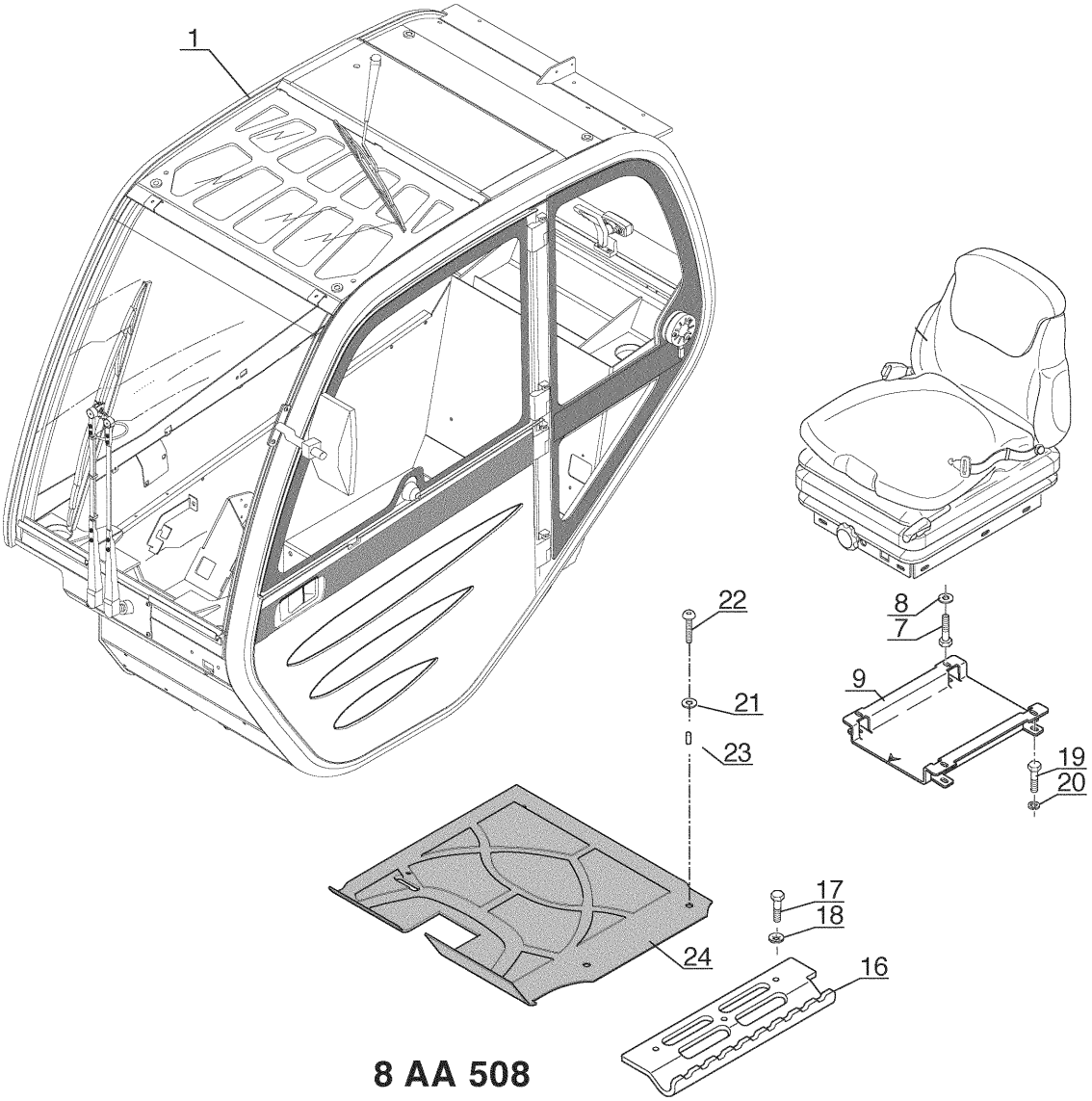
1
22
21
23
24
8
7
9
19
20
17
18
16
8 AA 508

Cab - Seat Mount - Floor mat

Ref. No.	Part No.	Description	Qty. Req.
01	215150	Cab *(Complete)*	1
		(Excluding interior components.)	
07	219055	Bolt, M8-20 8.8 ZN8/C	4
08	218510	Washer, M8	4
09	215149	Seat Bracket	1
16	215148	Foot Scuff Plate	1
17	219055	Bolt, M8-20	4
18	219867	Washer	4
19	219055	Bolt, M8-20	1
20	219054	Washer, W8	1
21	215147	Washer	2
22	215146	Bolt, M6-40 10.9 ZN5A	2
23	215145	Spacer Tube	4
24	215144	Floor mat	AR

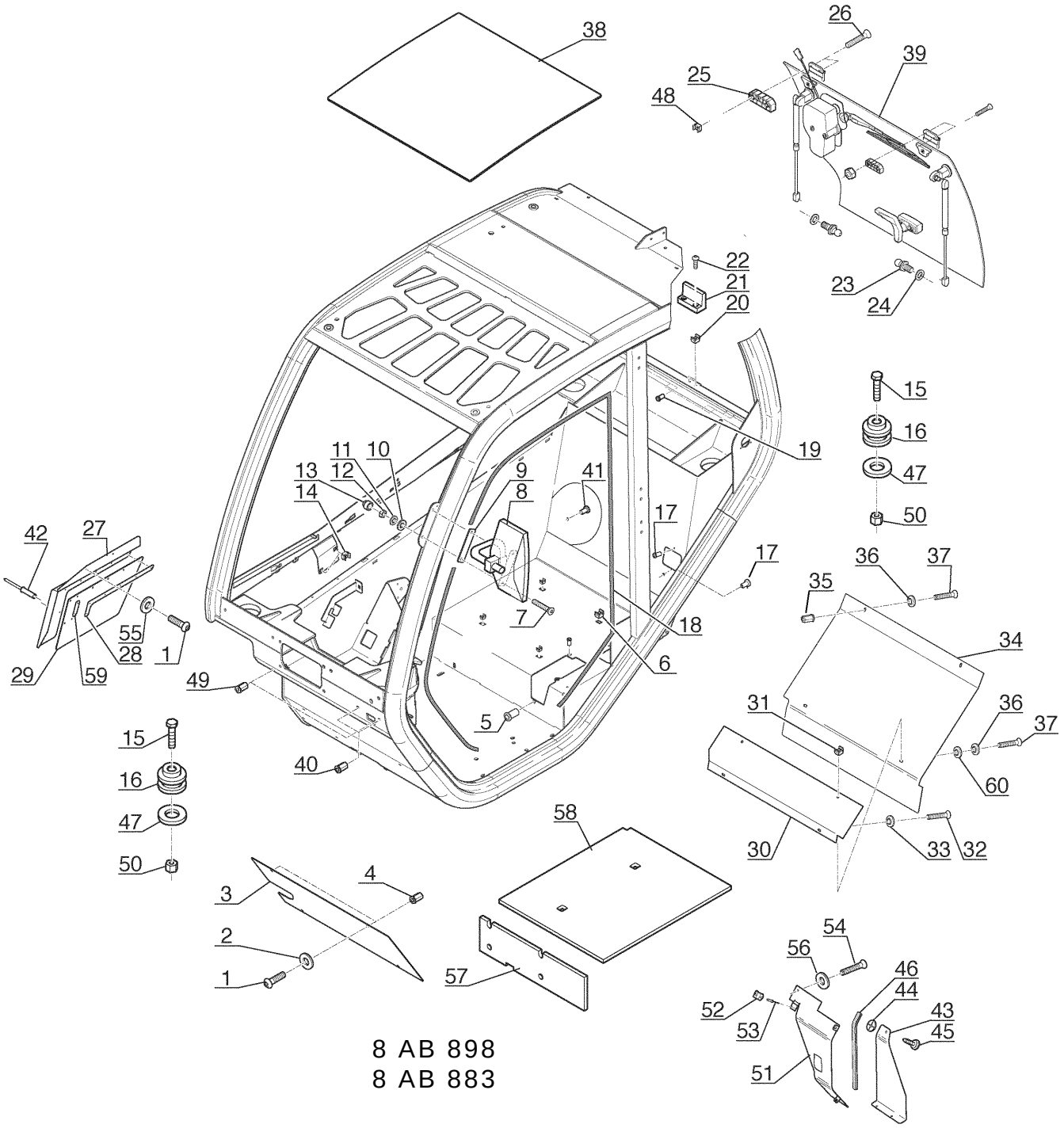

8 AB 898
8 AB 883

Ref. No.	Part No.	Description	Qty. Req.
01	218409	Bolt, M6-16	4
02	219250	Washer	4
03	219482	Bracket	1
04	219464	Insert	4
05	219487	Insert	3
06	218502	Nut	4
07	219029	Bolt, M6-20	2
08	219274	Complete L.H. Rearview Mirror	1
09	219337	Bracket	1
10	218439	Washer	2
11	219052	Washer	2
12	219022	Nut	2
13	219266	Cap	2
14	218551	Nut	2
15	218359	Bolt, M20-110	4
16	218518	Rubber Isolator *(shock absorber)*	4
17	219464	Insert	2
18	219484	Seal	1
19	219669	Insert	4
20	219670	Nut	2
21	219186	Stop	1
22	218415	Bolt, M5-16	2
23	219866	Ball joint	2
24	219054	Washer	2
25	219244	Spacer	2
26	219865	Bolt	4
27	215118	Housing	1
28	219602	Protection Plate	1
29	219646	Flap	1
30	219485	Fastening Plate	1
31	218395	Nut	2
32	218409	Bolt	2
33	219250	Washer	2
34	219486	Fastening Plate	1
35	219654	Insert	2
36	219250	Washer	4
37	218409	Bolt, M5-16	2
38	219665	Top Windows & Seal Mastic	1
39	219474	Complete Back Door	1
40	219487	Insert	2
41	219464	Insert	1
42	219174	Rivet	10
43	218747	Fastening Plate	1
44	218751	Washer	1
45	218029	Bolt	1
46	219271	Weatherstrip	1
47	215115	Washer	4
48	218502	Nut	4
49	219464	Insert	2
50	218423	Nut	4
51	215114	Cover Plate	1
52	219338	Lock Plate	1
53	218345	Rivet	2
54	218471	Bolt, M6-12 *(black)*	3
55	219250	Washer	2
56	215789	Washer, M6	3
57	219692	Sound-proofing Foam	1
58	219693	Sound-proofing Foam	1
59	215113	Plate	1
60	215789	Washer, M6	2

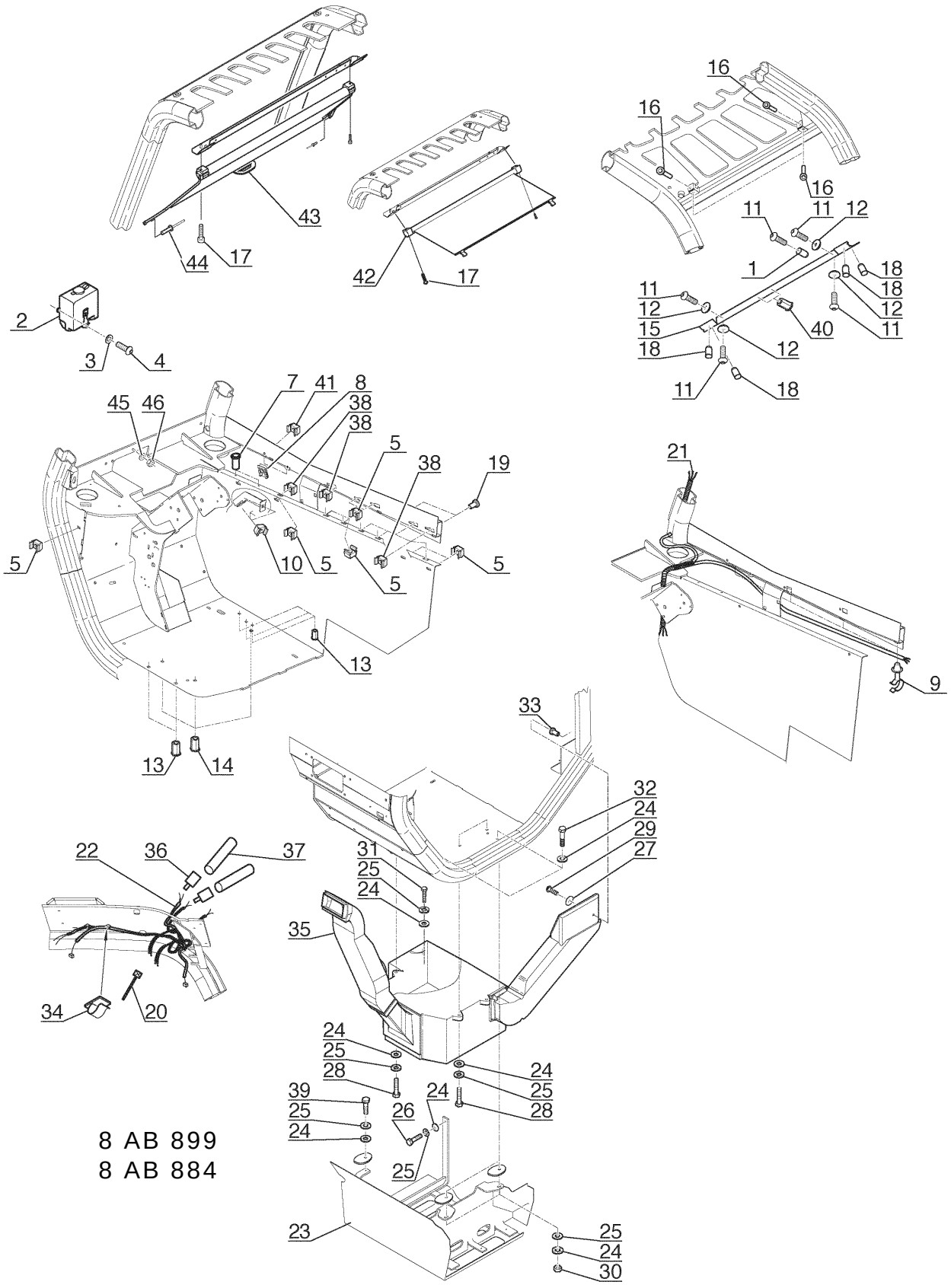

8 AB 899
8 AB 884

Ref. No.	Part No.	Description	Qty. Req.
01	219669	Insert	1
02	219603	Windshield Washer Tank	1
03	218467	Washer	2
04	215106	Bolt, M6-12	2
05	218395	Nut	AR
07	219464	Insert	2
08	218150	Nut	2
09	219489	Clamp	5
10	218395	Nut	2
11	218415	Bolt, M5-16 *(black)*	5
12	219251	Washer	4
13	219464	Insert	3
14	219487	Insert	3
15	219490	Bracket	1
16	219669	Insert	4
17	218511	Bolt	4
18	219885	Insert	4
19	219464	Insert	2
20	219237	Cable Clamp	2
21	215105	Wire Harness	1
22	215104	Wire Harness	1
23	215103	Housing, Lower Cab A/C	1
24	218510	Washer, M8	10
25	219054	Washer	8
26	219184	Bolt, M8-16	1
27	215142	Plastic Washer	1
28	219861	Bolt, M8-40	3
29	218415	Bolt, M5-16	1
30	219616	Nut, M8	2
31	219055	Bolt, M8-20	1
32	219610	Bolt, M8-25	2
33	219669	Insert	1
34	219276	Clip	3
35	215318	Air Conditioner Unit	1
36	219273	Cable Terminal	2
37	218139	Plug	AR
38	218395	Nut	8
39	219055	Bolt, M8-20	1
40	219885	Insert	2
41	218395	Nut	1
42	217441	Sun Shade	1
43	217445	Sun Shade	1
44	219174	Rivet	2
45	218439	Washer, M6	1

Windshield Protection Grill (Option)

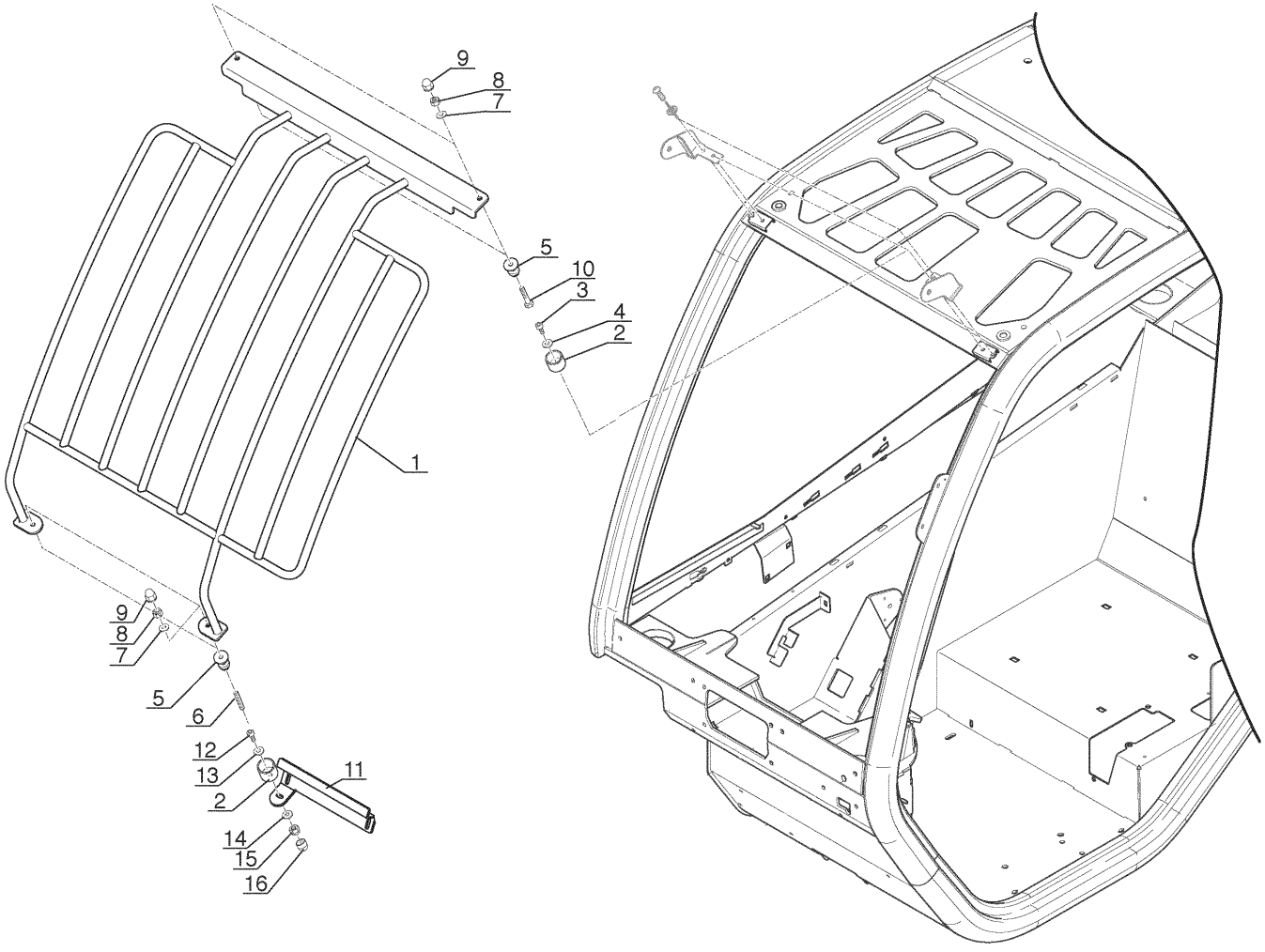

8 AA 555

Windshield Protection Grill (Option)

Ref. No.	Part No.	Description	Qty. Req.
01	215093	Grid	1
02	215782	Adapter, Locking - Female	4
03	218471	Bolt, M6-12	2
04	218379	Washer	4
05	215784	Adapter, Locking - Male	4
06	217452	Bolt	2
07	218439	Washer, M6	2
08	218344	Nut, M6	2
09	219266	Cap	2
10	219171	Bolt, M6-30	4
11	215092	Bracket	1
12	218409	Bolt, M6-16	2
13	218379	Washer	2
14	218439	Washer, M6	4
15	218344	Nut, M6	4
16	219266	Cap	4

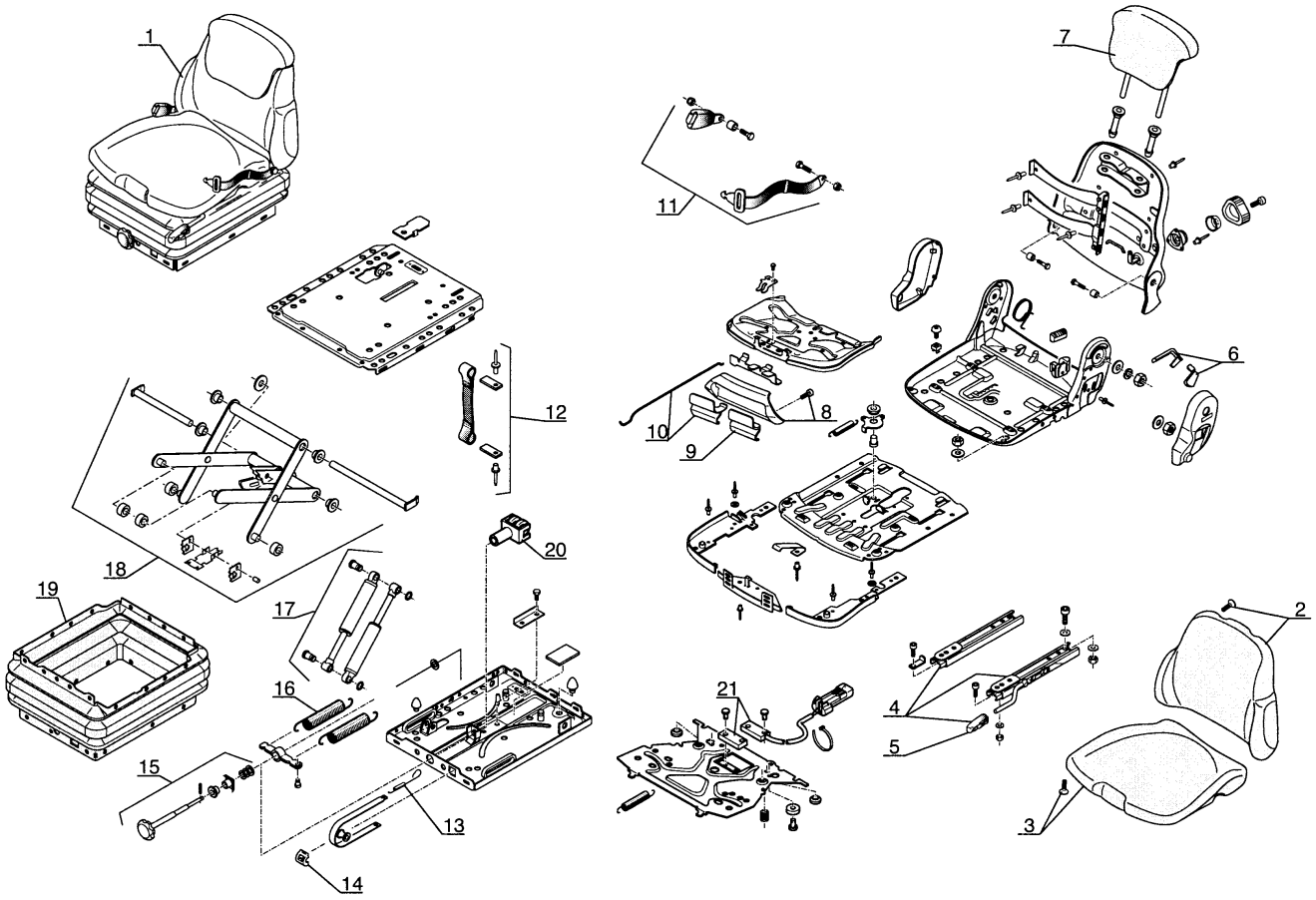

8 AA 423

Ref. No.	Part No.	Description	Qty. Req.
01	217590	Complete seat	1
02	218155	Backrest	1
03	218156	Seat	1
04	218157	Channel w/Drive	1
05	218158	Handle	1
06	218159	Handle	1
07	217591	Backrest extension	1
08	218161	Housing	1
09	218162	L.H. Handle	1
10	218163	R.H. Handle	1
11	218512	Seat Belt	1
12	218164	Webbing	1
13	218165	Spring	1
14	218166	Cap	1
15	217592	Complete Handle	1
16	218167	Spring	2
17	218168	Damper	1
18	218169	Suspension	1
19	218170	Suspension Cover	1
20	215465	Fork Joint	1
21	215414	Switch	1
		-- Items Not Shown ---	
00	215415	Wire Harness *(safety switch)*	1

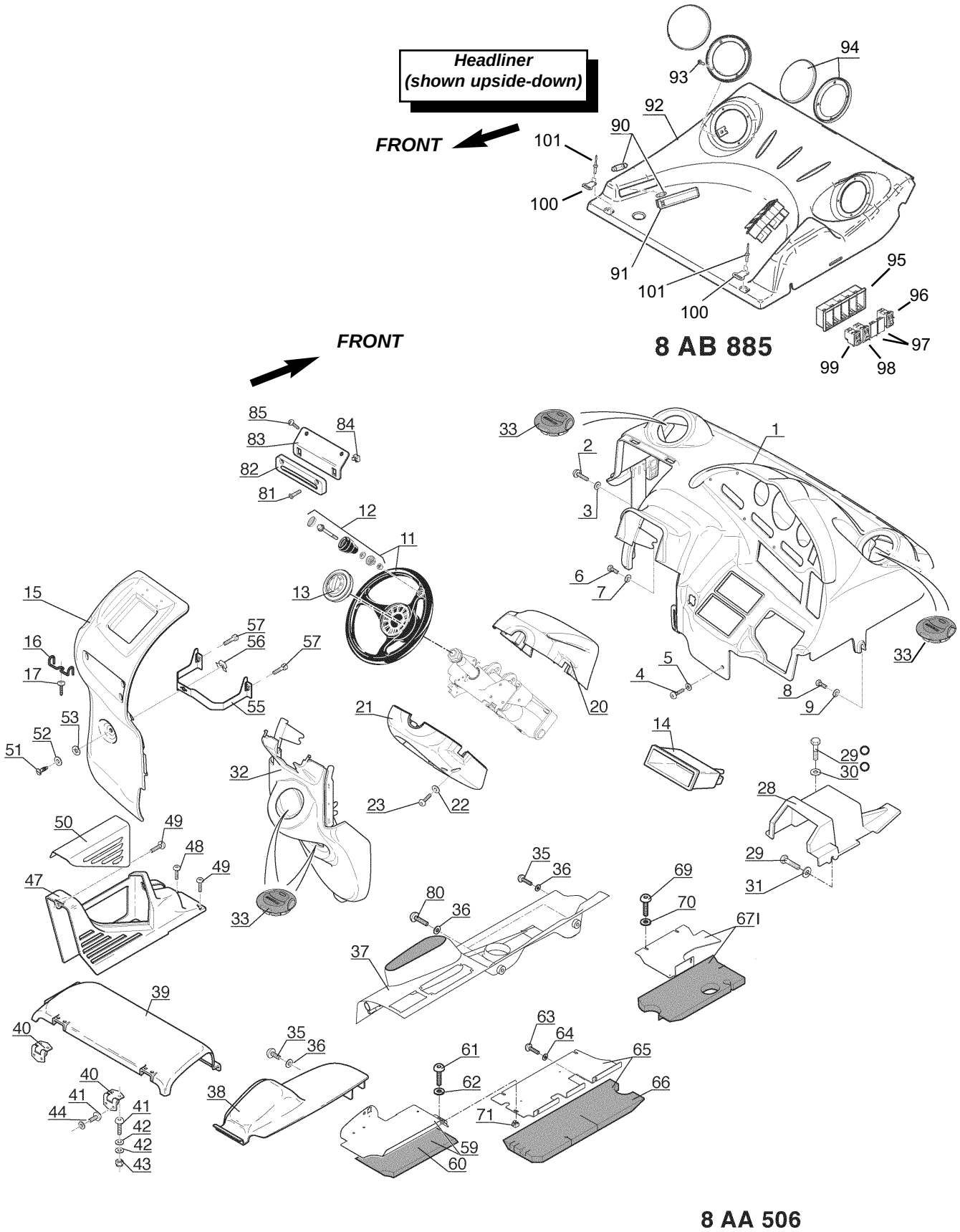
Headliner
(shown upside-down)
FRONT
94
93
92
90
101
100
91
101
100
95
96
97
99
98
8 AB 885
FRONT
85
84
83
82
81
12
11
13
15
16
17
57
56
57
55
53
52
51
21
23
22
32
33
50
49
48
49
47
35
36
80
36
37
39
40
40
41
41
44
42
42
43
38
35
36
61
62
71
59
60
63
64
65
66
33
2
3
1
6
7
5
4
8
9
33
20
14
29
30
28
29
31
69
70
67I

8 AA 506

Ref. No.	Part No.	Description	Qty. Req.
01	215340	Front instrument panel	1
02	218409	Bolt, M6-16	1
03	218439	Washer, L6	1
04	218409	Bolt, M6-16	1
05	215789	Washer, M6	1
06	219070	Bolt, M6-20	1
07	218439	Washer, L6	1
08	219021	Bolt, M6-16	1
09	218439	Washer, M6	1
11	218454	Steering Wheel *(includes #12)*	1
12	215340	Spinner, Steering Wheel	1
13	215339	Steering Wheel Cap	1
14	219131	Radio Box	1
15	215338	Dash Panel, L.H.	1
16	218550	Load Chart Retainer Clip	1
17	219925	Screw	1
20	215337	Steering Column Cover, Front	1
21	215336	Steering Column Cover, Rear	1
22	218690	Washer	4
23	217523	Bolt, M4-20	4
28	215335	Console, Front	1
29	219021	Bolt, M6-16	2
30	215789	Washer, M6	1
31	219068	Washer, L6	1
32	215334	Lower Console	1
33	215333	Air Diffuser (vent)	4
35	218683	Bolt, M6-10	3
36	215789	Washer, M6	5
37	215332	Center Console w/Arm Rest	1
38	215331	Console, Rear	1
39	215330	Rear Deck Cover	1
40	218684	Hinge	2
41	218415	Bolt, M5-16	8
42	218685	Washer, M5	8
43	218478	Nut, FR M5	4
44	219034	Washer, W5	4
47	215329	Console, Handbrake	1
48	218507	Bolt, M6-20	1
49	218409	Bolt, M6-16	2
50	218718	Filter Housing	1
51	215328	Locking Screw	1
52	218439	Washer, L6	1
53	215327	Bushing	1
55	215326	Bracket, L.H. Dash Panel	1
56	218395	Nut, M6	1
57	219900	Bolt, M6-20	2
59	215325	Bracket, Rear Console	1
60	215959	Sound-proofing Foam	1
61	218409	Bolt, M6-16	4
62	218439	Washer, M6	1
63	218409	Bolt, M6-16	4
64	218439	Washer, M6	4
65	215324	Bracket, Rear Center Console	1
66	215323	Sound-proofing Foam	1
67	215322	Bracket, Front Center Console	1
69	218409	Bolt, M6-16	3
70	218439	Washer, M6	3
71	218501	Nut, M6	1
80	218683	Bolt, M6-10	2
81	219850	Bolt, M4-20	2
82	218893	Frame Level Indicator	1
83	218895	Bracket, Frame Level Indicator	1
84	219047	Cage Nut	2
85	218511	Bolt, M4-12	2
90	215112	Bulb, Domelight	2
91	215111	Light, Interior Roof	1
92	215410	Headliner	1
93	215110	Screw	8
94	215109	Grill, Speaker	2
95	215190	Switch Bracket	1
96	218611	Windshield Wiper Switch, Rear	1
97	218619	Switch Plug	2
98	215191	Switch, Light	1
99	218614	Switch, Revolving Light *(beacon)*	1
100	NSS	Rivet	4
101	215107	Bracket, Headliner	2

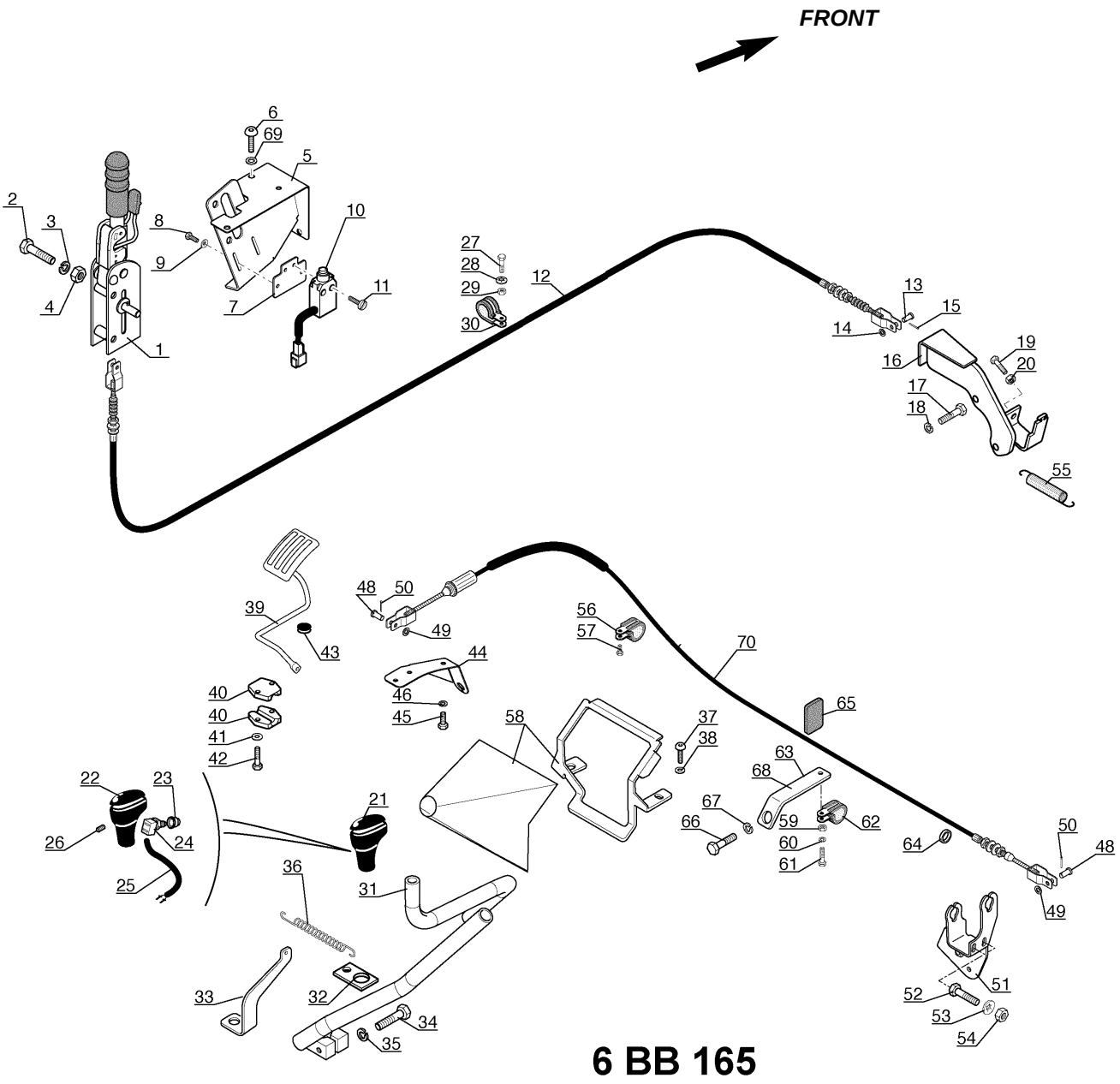
FRONT
6 BB 165

Interior Cables, Levers and Pedals

Ref. No.	Part No.	Description	Qty. Req.
01	219971	Complete Handbrake	1
02	219065	Bolt	2
03	219051	Washer	2
04	219422	Nut	2
05	218627	Handbrake Bracket	1
06	218495	Bolt	3
07	218009	Switch Bracket	1
08	218357	Bolt	2
09	219926	Washer	2
10	106496	Handbrake Switch	1
11	219611	Bolt	2
12	219946	Handbrake Cable	1
13	219415	Pin	1
14	219028	Washer	1
15	219041	Pin	1
16	218628	Sheath Retainer	1
17	219613	Bolt, M10-25	2
18	215051	Washer	2
19	219868	Bolt, M10-35	1
20	219422	Nut, M10	1
21	218529	Ball	1
22	219224	Cap	1
23	219227	Cap	1
24	219225	Transmission Cut-off Switch	1
25	219228	Wire Harness	1
26	219226	Bolt	1
31	218769	Gear Lever	1
32	219924	Spring	1
33	218759	Bracket	1
34	219033	Bolt, M12-45	1
35	219050	Washer	1
36	218564	Spring	1
37	218049	Bolt, M6-16	1
38	218439	Washer, M6	1
39	215341	Accelerator Pedal	1
40	219921	Guide	2
41	218439	Washer	2
42	219170	Bolt	2
43	218416	Stop	1
44	218629	Fastener	1
45	219070	Bolt	1
46	219052	Washer	1
48	219604	Pin	2
49	218439	Washer	2
50	219041	Pin	2
51	218938	Sheath Retainer	1
52	219070	Bolt	2
53	218379	Washer	2
54	219022	Nut	2
55	219331	Spring	1
56	218864	Clamp	1
57	218342	Bolt	1
58	218834	Bellows	1
59	219168	Nut, M5	1
60	219034	Washer	1
61	219057	Bolt	1
62	218864	Clamp	1
63	218795	Fastening Pplate	1
64	218545	Cable Grommet	1
65	219922	Cap	1
66	218341	Bolt, M12-16	1
67	219050	Washer, W12	1
69	218773	Washer, M8	3
70	218809	Accelerator Cable	1

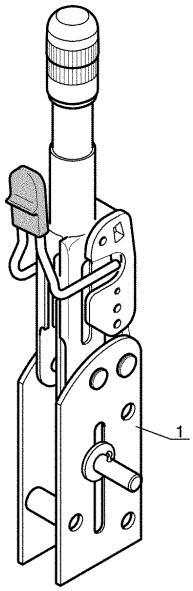

6 BA 122

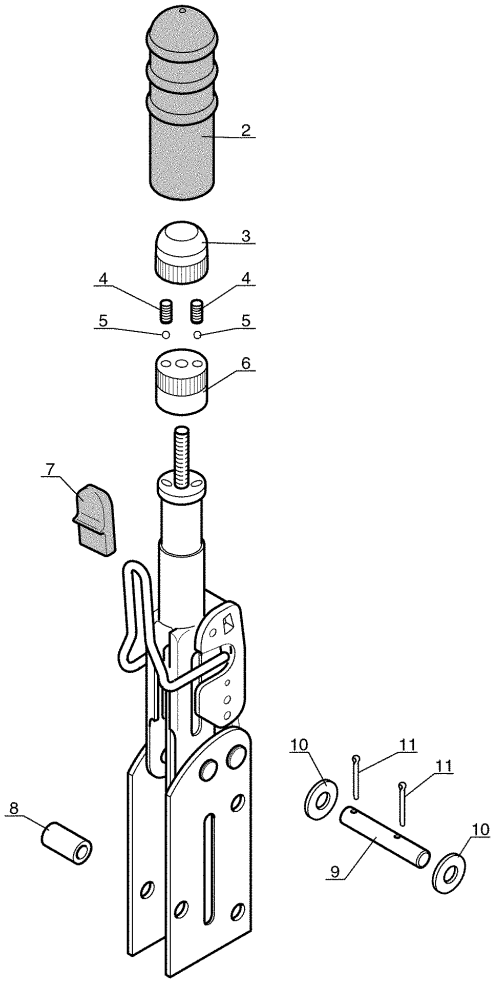

Parking Brake Handle

Ref. No.	Part No.	Description	Qty. Req.
01[a]	219971	Complete Handbrake Handle	1
02	219423	Handle *(rubber)*	1
03	219876	Button	1
04	219155	Spring	2
05	219154	Ball	2
06	217642	Button	1
07	219424	Cap	1
08	219153	Spacer	3
09	219412	Pin	1
10	219413	Washer	2
11	219041	Cotter pin	2

a *Does not include item # 2.*

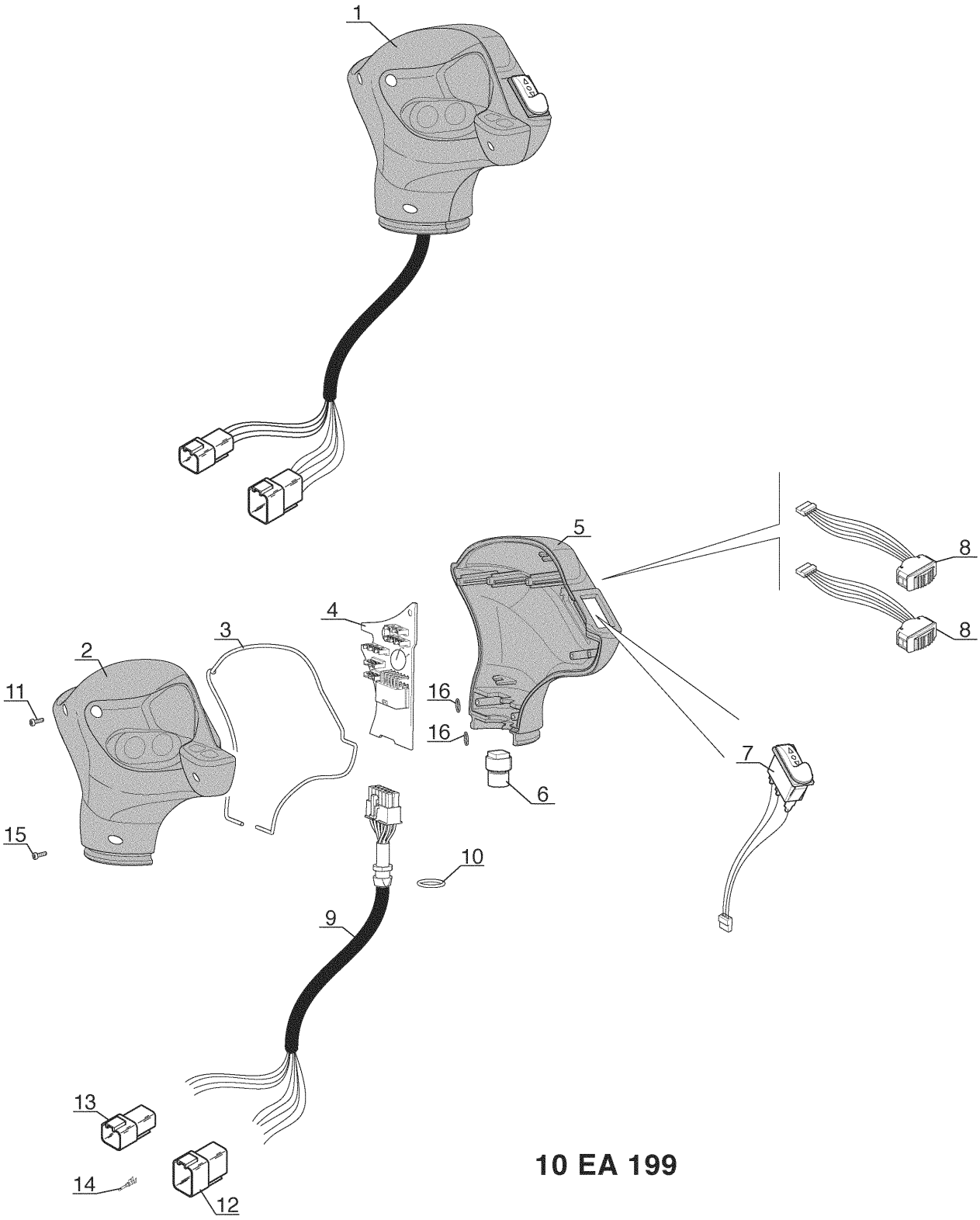
1
5
8
8
4
3
2
11
16
16
7
6
15
10
9
13
14
12
10 EA 199

Joystick - Multi-function Controller

Ref. No.	Part No.	Description	Qty. Req.	Ref. No.	Part No.	Description	Qty. Req.
01	215310	Controller/Multi-function *(complete)*	1	09	215245	Wire Harness, Joystick	1
02	215252	Housing, R.H.	1	10	215244	O-Ring	1
03	215251	Gasket	1	11	215243	Screw	6
04	215250	Printed Circuit Board	1	12	215242	Connector, Female	1
05	215249	Housing, L.H	1	13	215241	Connector, Female	1
06	215248	Thread Adapter	1	14	215240	Terminal Connector, Male	9
07	215247	Switch, F-N-R	1	15	215239	Screw	2
08	215246	Switch, Extend/Retract/Aux.	2	16	215238	O-Ring	2

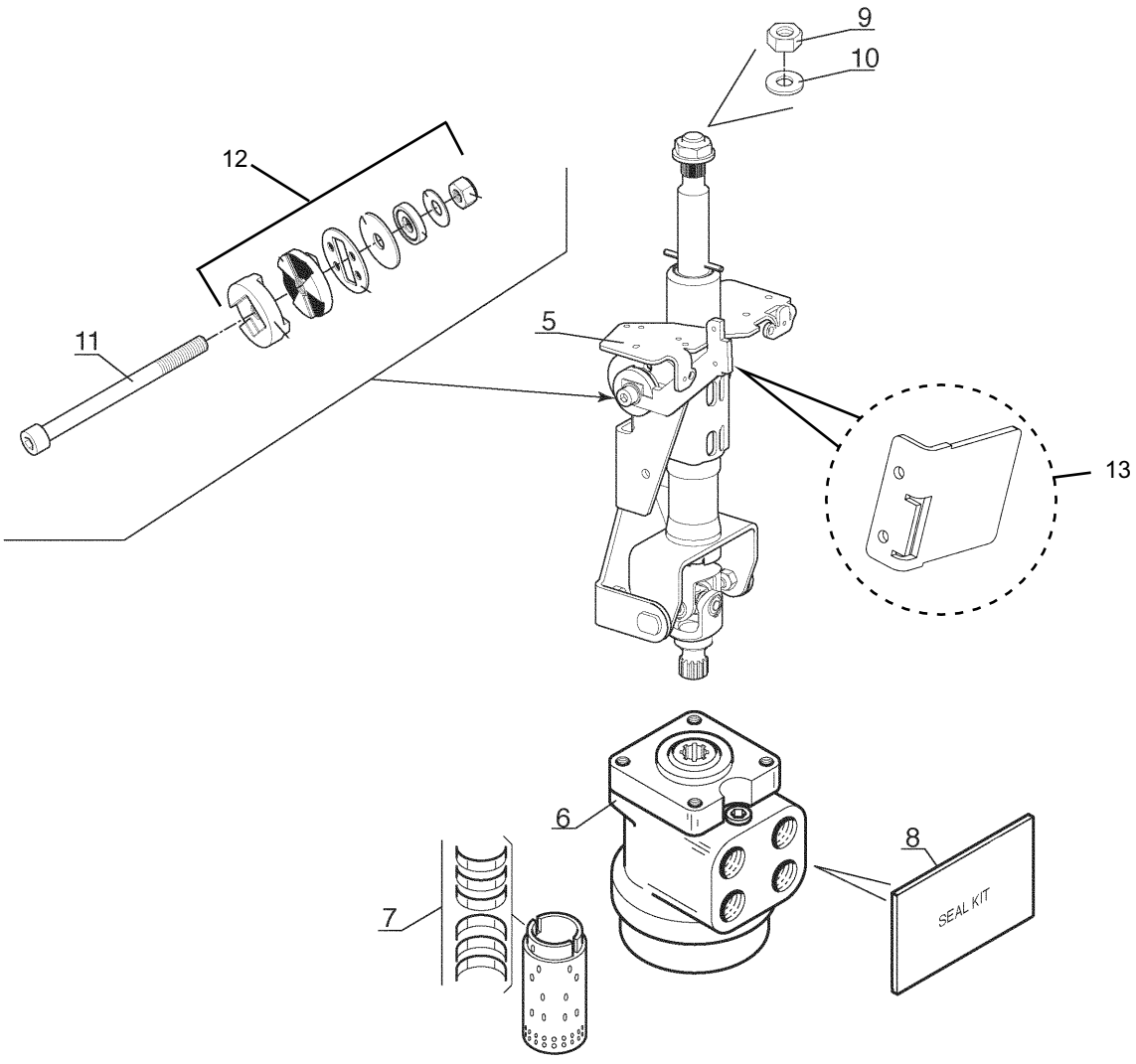

10 EA 202

Ref. No.	Part No.	Description	Qty. Req.	Ref. No.	Part No.	Description	Qty. Req.
05	215277	Steering column	1	10	215236	Washer	1
06	218474	Steer Motor	1	11	215235	Bolt	1
07	219936	Seal Kit	1	12	215064	Kit, Steering Column Lock	1
08	218370	Bushing Kit	1	13	215276	Lever, Tilt Steering	1
09	215237	Nut	1		218511	Bolt, M4-12 Black *(not shown)*	2

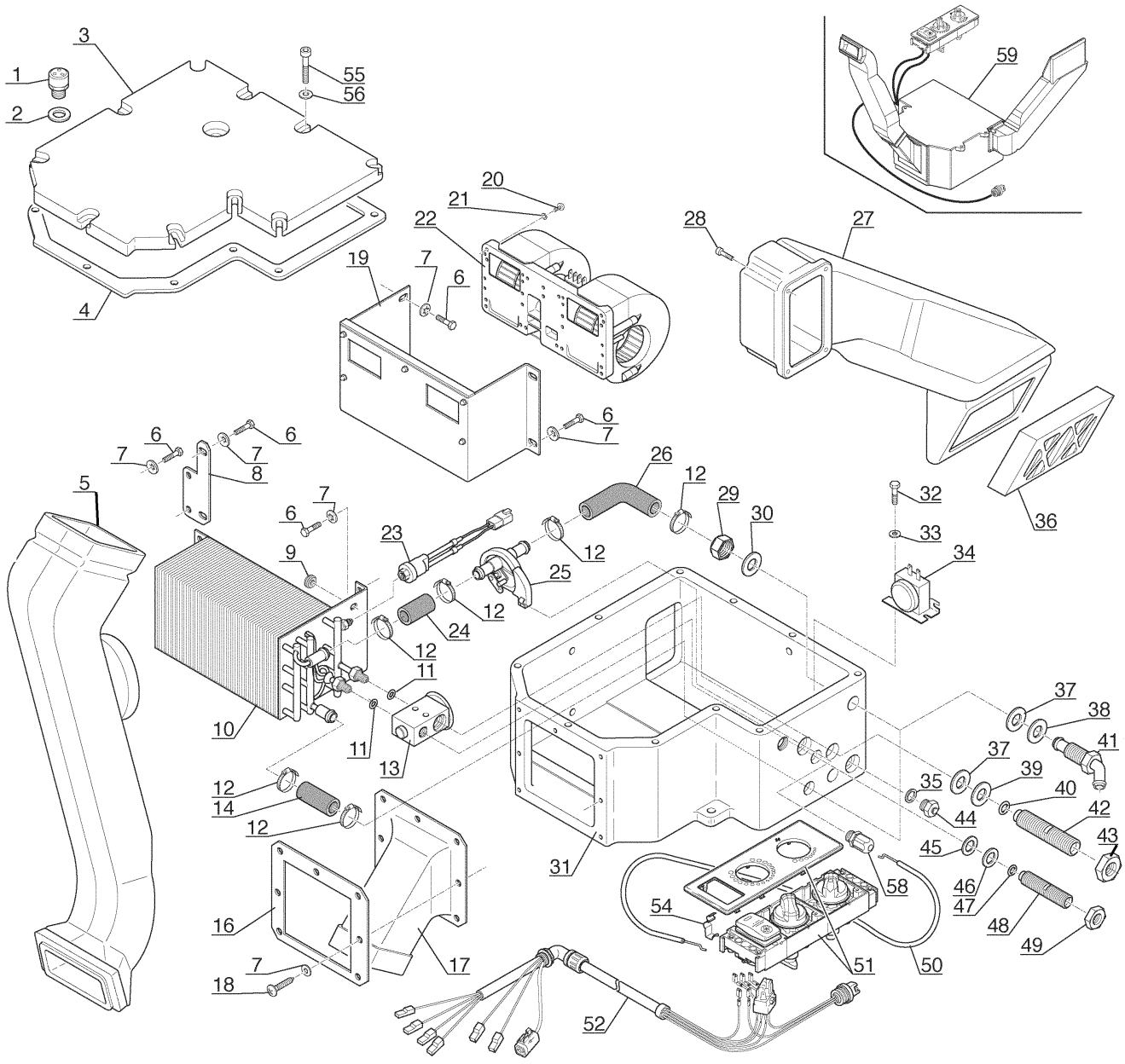
1
2
3
4
5
6
7
8
9
10
11
12
13
14
16
17
18
19
20
21
22
23
24
25
26
27
28
29
30
31
32
33
34
35
36
37
38
39
40
41
42
43
44
45
46
47
48
49
50
51
52
54
55
56
58
59

8 AD 222

Air Conditioner - Housing and Blower

Ref. No.	Part No.	Description	Qty. Req.
01	219513	Back Pressure Valve	1
02	219514	Seal	1
03	219515	Cover	1
04	219516	Gasket	1
05	218651	Air pipe	1
06	217427	Bolt	10
07	219550	Washer	17
08	219517	Condenser Bracket	1
09	215924	Grommet	1
10	215923	Condenser	1
11	215922	O-ring	2
12	219519	Clamp	5
13	215927	Regulator	1
14	219520	Hose	1
15	219519	Clamp	1
16	219523	Bracket	1
17	219522	Air Pipe	1
18	219652	Screw	7
19	219524	Blower Motor Cover	1
20	219525	Bolt, M4-12	6
21	219926	Washer	6
22	219526	Blower Assembly	1
23	215921	Low Pressure Switch	1
24	219529	Hose	1
25	219530	Temperature Control Valve	1
26	219528	Hose	1
27	219552	Air Pipe	1
28	219527	Bolt	4
29	219531	Nut	2
30	219520	Washer	2
31	215902	Housing	1
32	215151	Bolt, M5-12	1
33	215918	Washer	1
34	215586	Thermostat	1
35	219536	Seal	1
36	219947	Cab Filter	1
37	219533	Seal	2
38	219534	Washer	2
39	215915	Washer	1
40	215914	O-ring	1
41	219535	Adapter	2
42	215913	Adapter	1
43	215912	Nut	1
44	219537	Plug	1
45	215911	Seal	1
46	215910	Washer	1
47	215909	O-ring	1
48	215908	Adapter	1
49	215907	Nut	1
50	219539	Temperature Control Cable	1
51	215011	Temperature Control Assembly	1
52	215319	Wire Harness	1
54	219542	Clip	1
55	218757	Screw	10
56	219550	Washer	10
58	215903	Weather-tite Connector	1
59	215318	Air Conditioner Assembly *(Includes all parts shown.)*	1

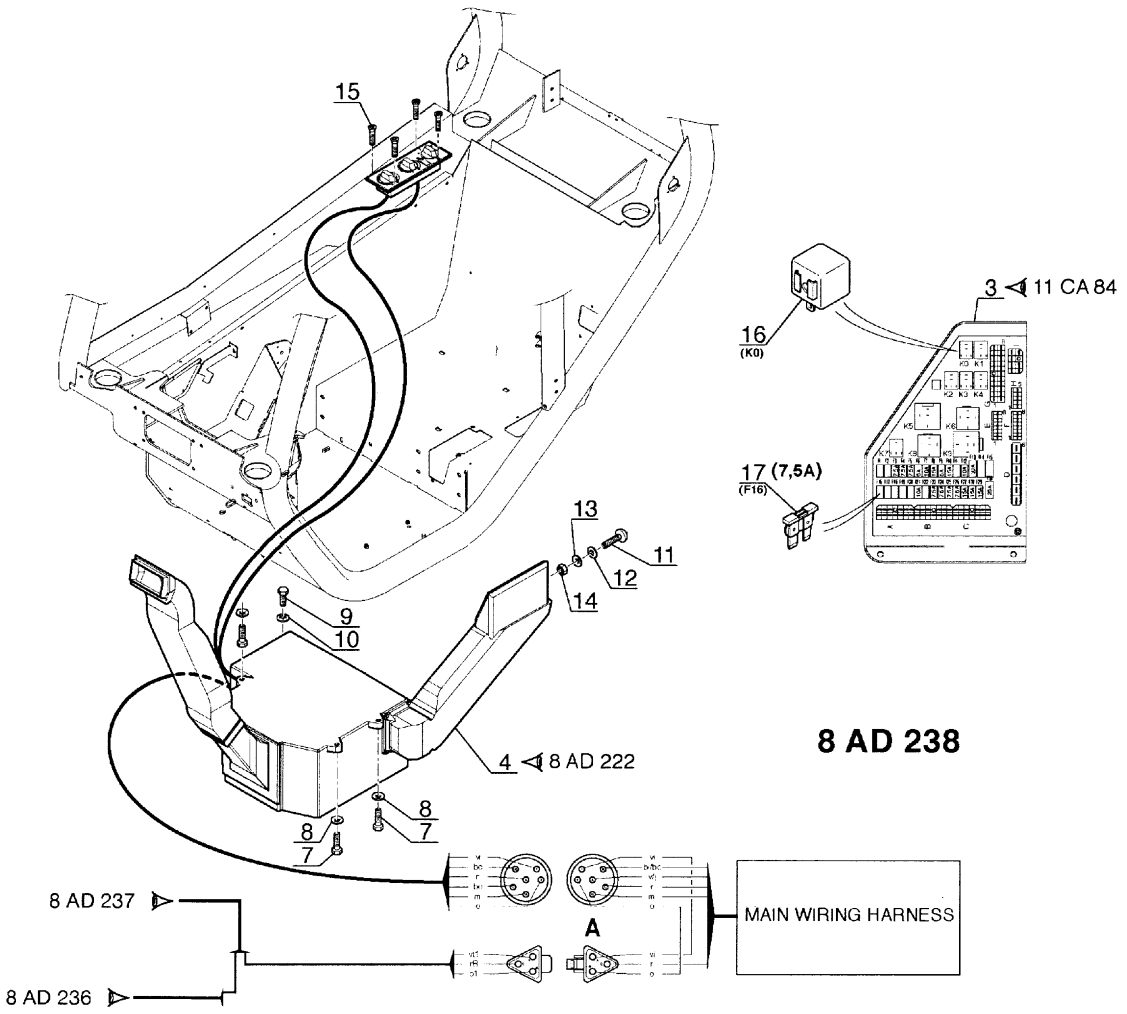
15
16 (K0)
3 11 CA 84
17 (7,5A) (F16)
13
11
12
14
9
10
4 8 AD 222
8 AD 238
8
7
8
7
8 AD 237
8 AD 236
A
MAIN WIRING HARNESS

Ref. No.	Part No.	Description	Qty. Req.
03	218999	Fuse and relay board	1
04	215318	Complete Air Conditioner	1
07	219861	Bolt, M8-40	3
08	219867	Washer	3
09	219055	Bolt, M8-30	1
10	219867	Washer	1
11	218415	Bolt, M5-16	1
12	219025	Washer, M5	1
13	218459	Washer	1
14	219168	Nut, M5	1
15	218653	Screw	4
16	219948	Relay	1
17	219950	Fuse, 7.5 Amp	1

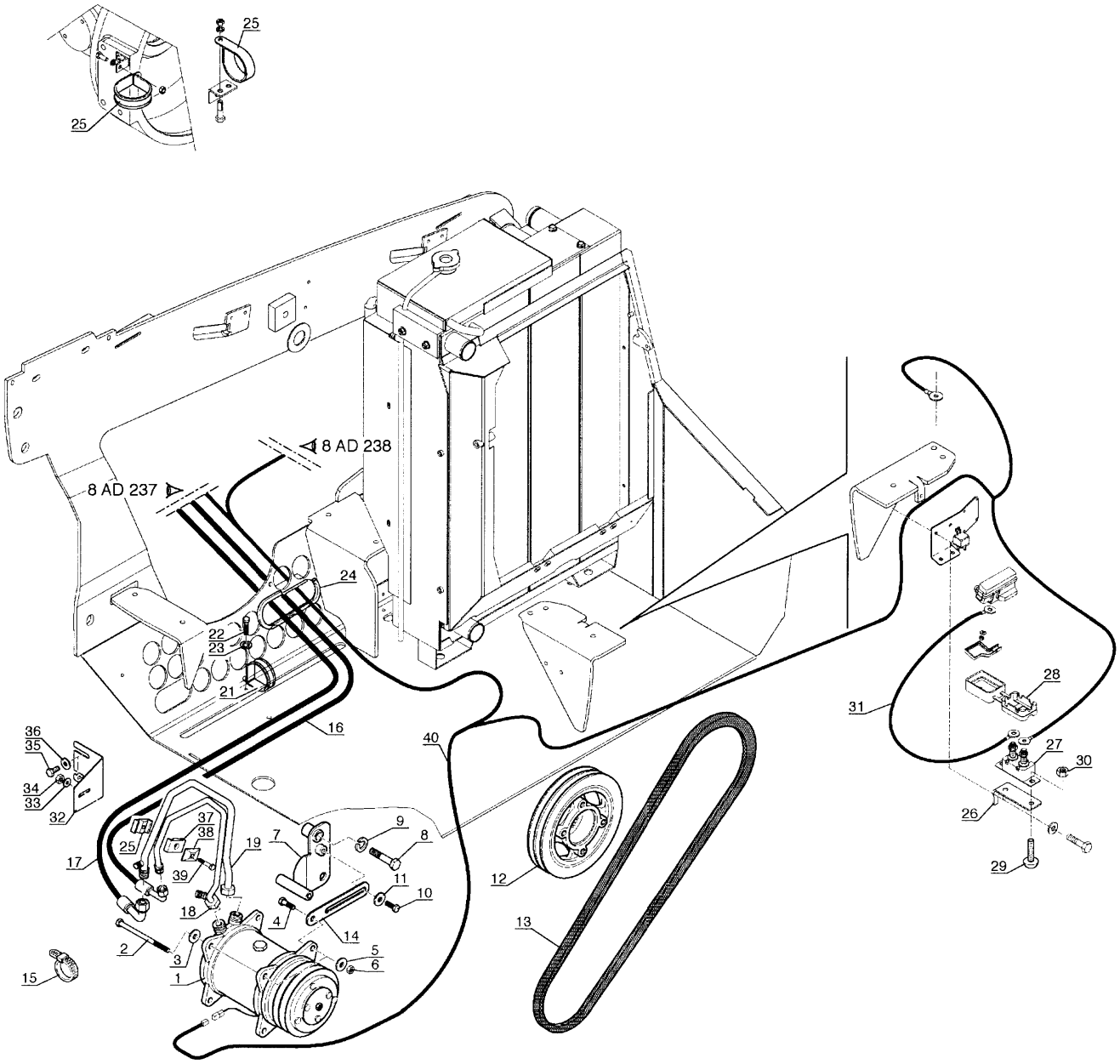
25
25
8 AD 238
8 AD 237
24
22
23
21
16
40
36
35
34
33
32
37
38
25
19
7
9
8
17
39
11
10
18
4
14
2
3
5
6
15
1
12
13
31
28
27
30
26
29

8 AD 236

Air Conditioner - Compressor and Hoses

Ref. No.	Part No.	Description	Qty. Req.
01	215900	Compressor	1
02	215899	Bolt	1
03	219028	Washer	1
04	219868	Bolt	1
05	219028	Washer	2
06	219269	Nut	2
07	215898	Bracket	1
08	219629	Bolt	1
09	219053	Washer	1
10	217736	Bolt	1
11	219028	Washer	1
12	215897	Pulley	1
13	215896	Belt	1
14	215895	Belt Tensioner	1
15	218347	Clamp	6
16	215038	Hose *(3700 mm long)*	1
17	215037	Hose *(1850 mm long)*	1
18	215036	Tube (M8)	1
19	215035	Tube (M10)	1
21	219935	Clamp	1
22	219055	Bolt, M8-20	1
23	219054	Washer	1
24	215419	Weatherstrip *(240 mm long)*	1
25	215034	Clamp	2
26	215033	Bracket	1
27	215492	Circuit Breaker	1
28	215032	Cap	1
29	218799	Bolt, M5-8 10.9 Black	2
30	219168	Nut, M5	2
31	215031	Wire Harness	1
32	215030	Tube Bracket	1
33	218510	Washer	1
34	219169	Nut, M8	1
35	219204	Bolt	2
36	218408	Washer	2
37	215029	Half-Clamp	2
38	218361	Clamp Plate	1
39	219618	Bolt, M8-50 10.9	1
40	215028	Wire Harness	1

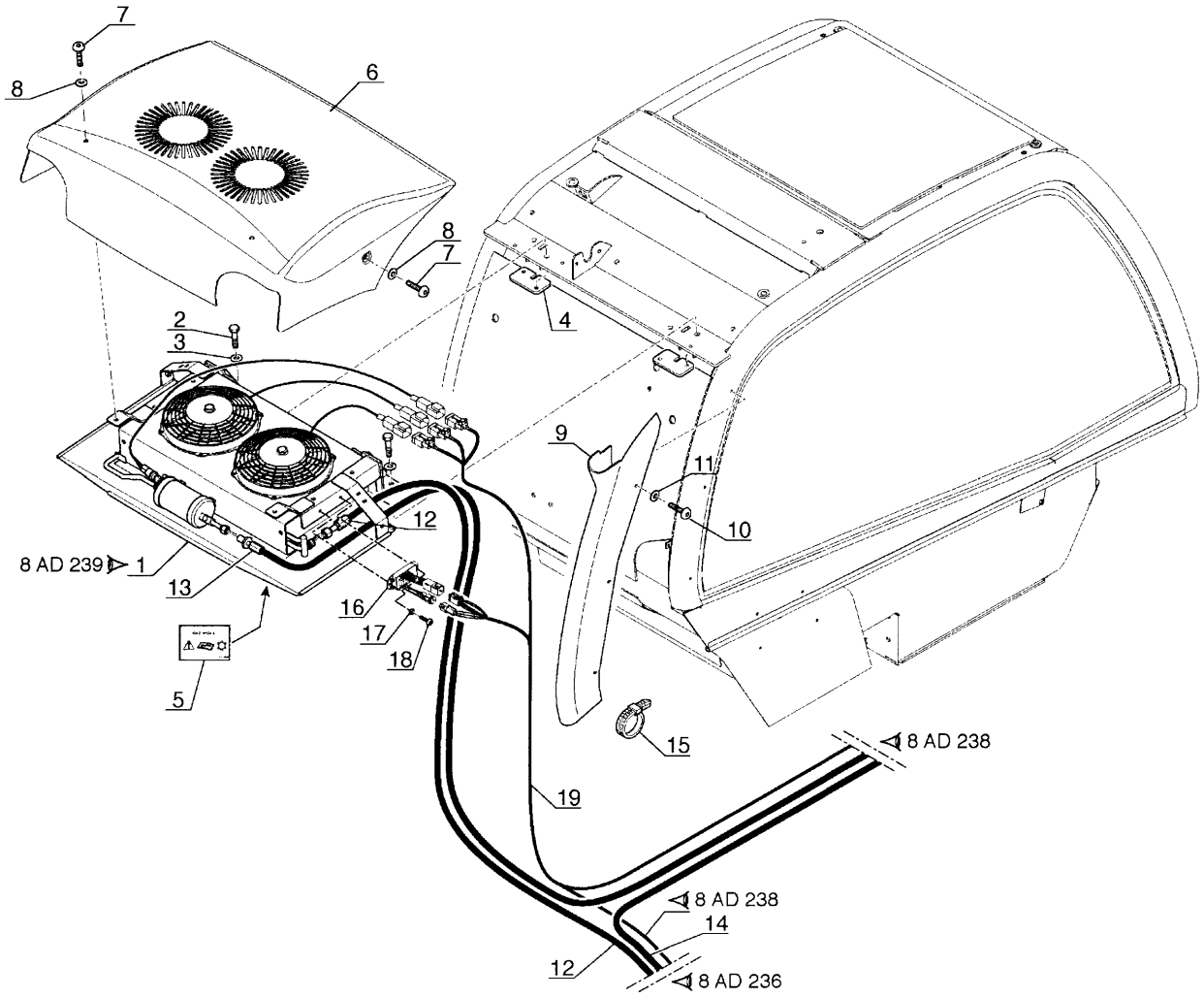
7
8
6
8
7
4
2
3
9
11
10
12
8 AD 239
1
13
16
17
18
5
15
8 AD 238
19
8 AD 238
14
12
8 AD 236

8 AD 237

Air Conditioner - Condenser and Hoses

Ref. No.	Part No.	Description	Qty. Req.
01	215027	Condenser Assembly	1
02	219192	Bolt, M10-25	4
03	219028	Washer, M10	4
04	215485	Bracket	2
05	215598	Decal	1
06	215026	Cover	1
07	215778	Bolt, M8-20	4
08	218773	Washer, M8	4
09	215487	Shield	1
10	218799	Bolt, M5-8	4
11	215025	Washer	4
12	215038	Hose *(3700 mm long)*	1
13	215488	Hose *(3185 mm long)*	1
14	215037	Hose *(1850 mm long)*	1
15	218437	Clamp	5
16	215024	Module, Air Conditioning	1
17	218511	Bolt, M4-12	2
18	218690	Washer, M4	2
19	215028	Wire Harness	1

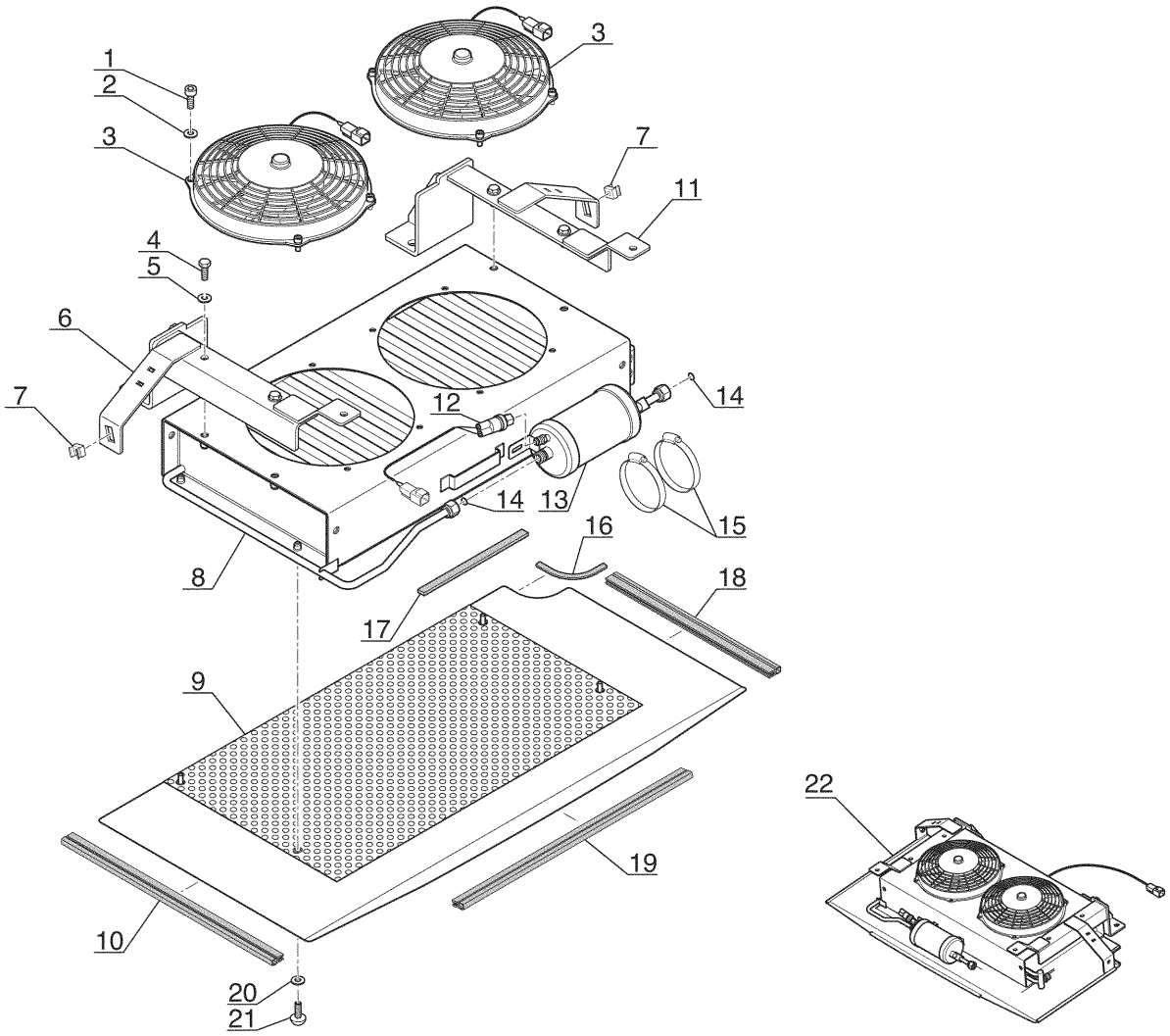

8 AD 239

Air Conditioner - Condenser Assembly

Ref. No.	Part No.	Description	Qty. Req.	Ref. No.	Part No.	Description	Qty. Req.
01	215510	Screw	8	12	215880	Pressure switch	1
02	215511	Washer	8	13	215505	Drier filter	1
03	215512	Fan	2	14	215909	O-ring	2
04	215513	Screw	4	15	215478	Clamp	2
05	215514	Washer	4	16	215477	Weatherstrip	1
06	215515	Bracket	1	17	215476	Foam	2
07	215516	Nut	2	18	215475	Weatherstrip *(315 mm long)*	1
08	215517	Condenser	1	19	215474	Weatherstrip *(440 mm long)*	1
09	215518	Grid	1	20	215473	Washer	4
10	215519	Weatherstrip *(405 mm long)*	1	21	215472	Screw	4
11	215520	Bracket	1	22	215027	Condenser Assembly	1

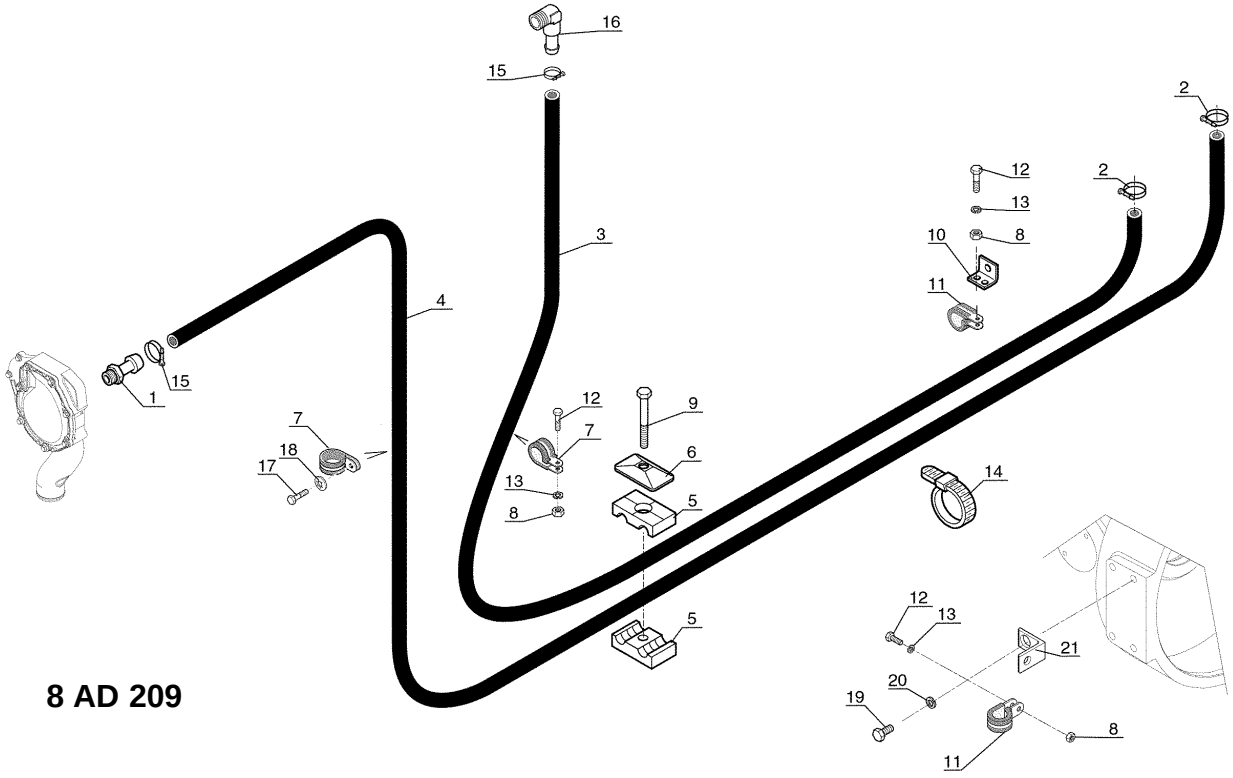
16
15
2
12
2
13
3
10
8
11
4
15
1
12
9
7
7
18
17
6
13
14
8
5
5
12
13
21
20
19
8
11

8 AD 209

Heater Hose Group

Ref. No.	Part No.	Description	Qty. Req.
01	218479	Adapter	1
02	218497	Clamp	2
03	219005	Hose	1
04	219005	Hose	1
05	218368	Half-clamp	2
06	218365	Protection plate	1
07	218817	Clamp	2
08	219616	Nut	3
09	219617	Bolt	1
10	218433	Bracket	1
11	219935	Clamp	2
12	219055	Bolt	3
13	219054	Washer	3
14	218561	Clamp	1
15	218800	Clamp	2
16	218940	Adapter	1
17	219021	Bolt	1
18	218379	Washer	1
19	219869	Bolt	1
20	219050	Washer	1
21	218990	Clamp bracket	1

Cab Lights - Part 1 of 2

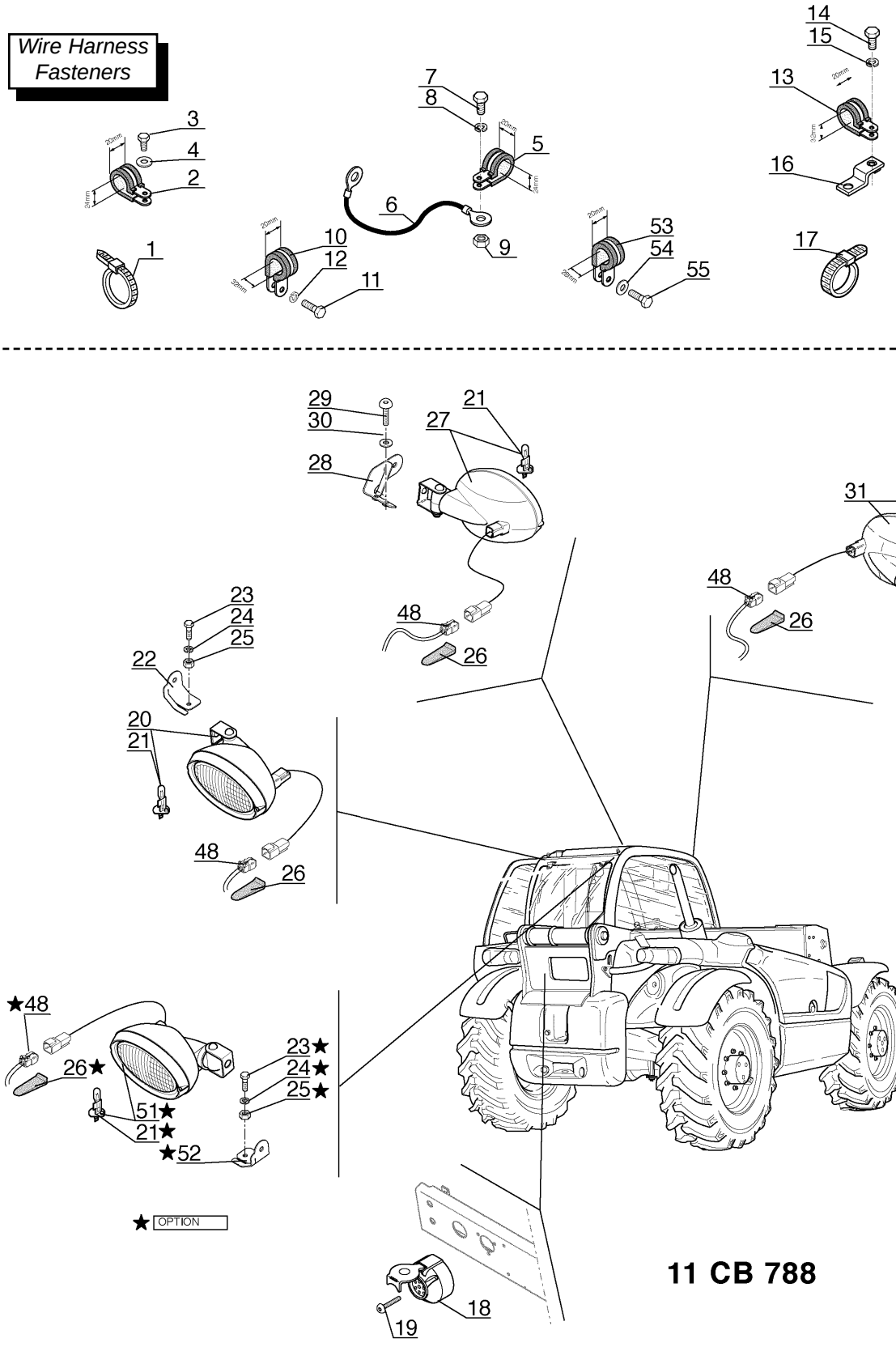

Cab Lights - Part 1 of 2

Ref. No.	Part No.	Description	Qty. Req.
01	218561	Clamp	4
02	219934	Clamp	1
03	219159	Bolt	1
04	218439	Washer	1
05	219934	Clamp	1
06	218996	Cable	1
07	219610	Bolt	1
08	219054	Washer	1
09	219616	Nut	1
10	218391	Clamp	1
11	219055	Bolt	1
12	219054	Washer	1
13	218391	Clamp	1
14	219184	Bolt	1
15	219054	Washer	1
16	218821	Bracket	1
17	218347	Clamp	5
18	215779	Connector	1
19	215778	Bolt, M8-20	3
20	215203	Cab Light	1
21	219069	Bulb	AR
22	215202	Bracket, Rear Cab Light	1
23	219699	Bolt, M10-16	2
24	219051	Washer, W10	2
25	219422	Nut, M10	2
26	215201	Heat Shrink Tubing	4
27	215203	Cab Light	1
28	215200	Bracket, Cab Light	1
29	215199	Bolt, M6-10	4
30	215789	Washer, M6	4
31	215198	Cab Light	1
32	215198	Bracket, Cab Light	1
48	215196	Connector	4
51	215198	Cab Light	1
52	215195	Bracket, Cab Light	1
53	218817	Clamp	1
54	218439	Washer	1
55	219159	Bolt, M6-10	1

Wire Harness Fasteners

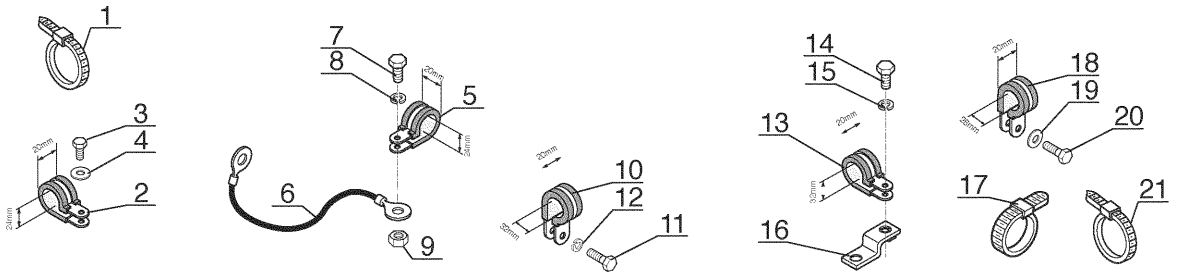

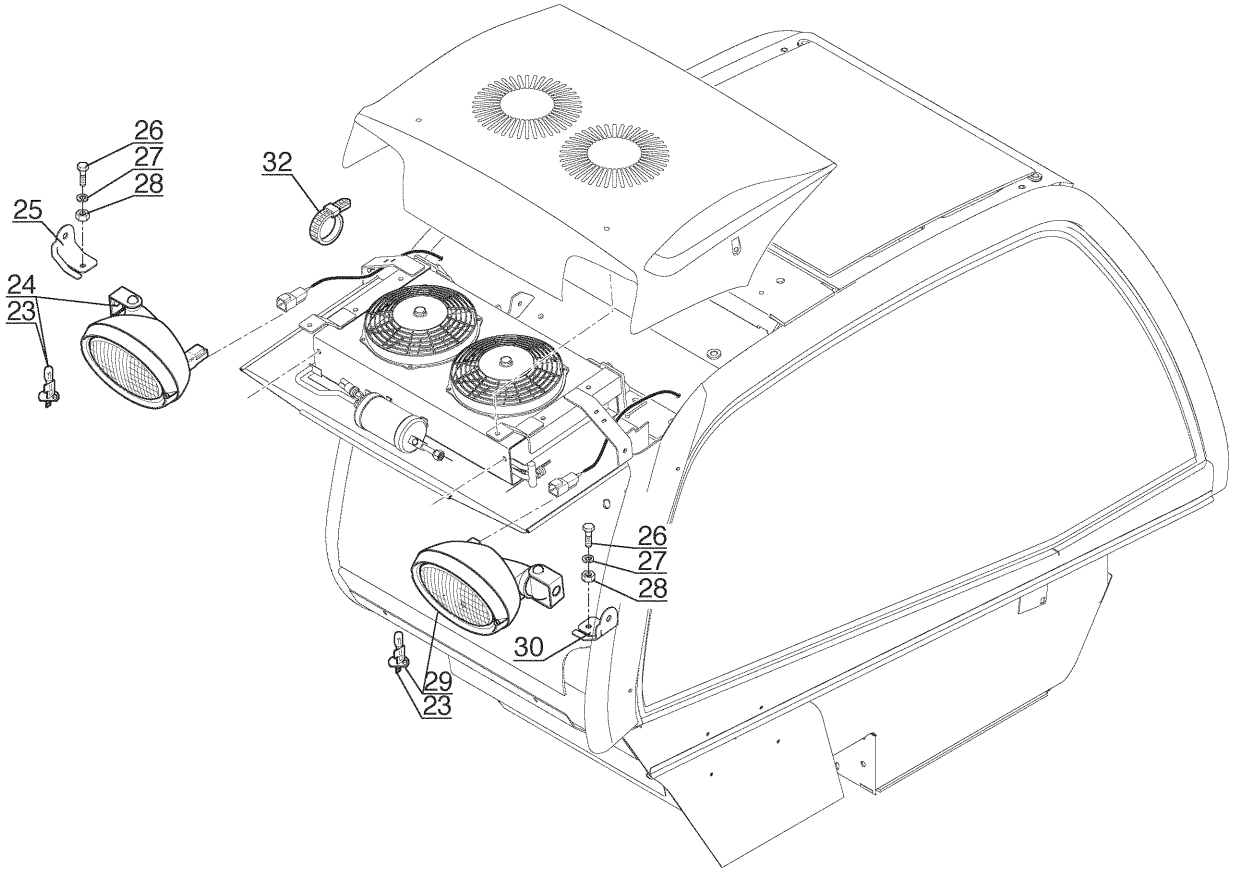

11 CB 790

Cab Lights - Part 2 of 2

Ref. No.	Part No.	Description	Qty. Req.
01	218561	Clamp	4
02	219934	Clamp	1
03	219159	Bolt	1
04	218439	Washer	1
05	219934	Clamp	1
06	218996	Cable	1
07	219610	Bolt	1
08	219054	Washer	1
09	219616	Nut	1
10	219935	Clamp	1
11	219055	Bolt	1
12	219054	Washer	1
13	218391	Clamp	1
14	219184	Bolt	1
15	219054	Washer	1
16	218821	Bracket	1
17	218347	Clamp	10
18	218817	Clamp	1
19	218439	Washer	1
20	219159	Bolt, M6-10	1
21	217794	Clamp	2
23	219069	Bolt	AR
24	215203	Cab Light	1
25	215202	Bracket, Cab Light / Rear	2
26	219699	Bolt, M10-16	2
28	219422	Nut, M10	1
29	215198	Cab Light	1
30	215195	Bracket, Cab Light	1
32	218347	Clamp	2

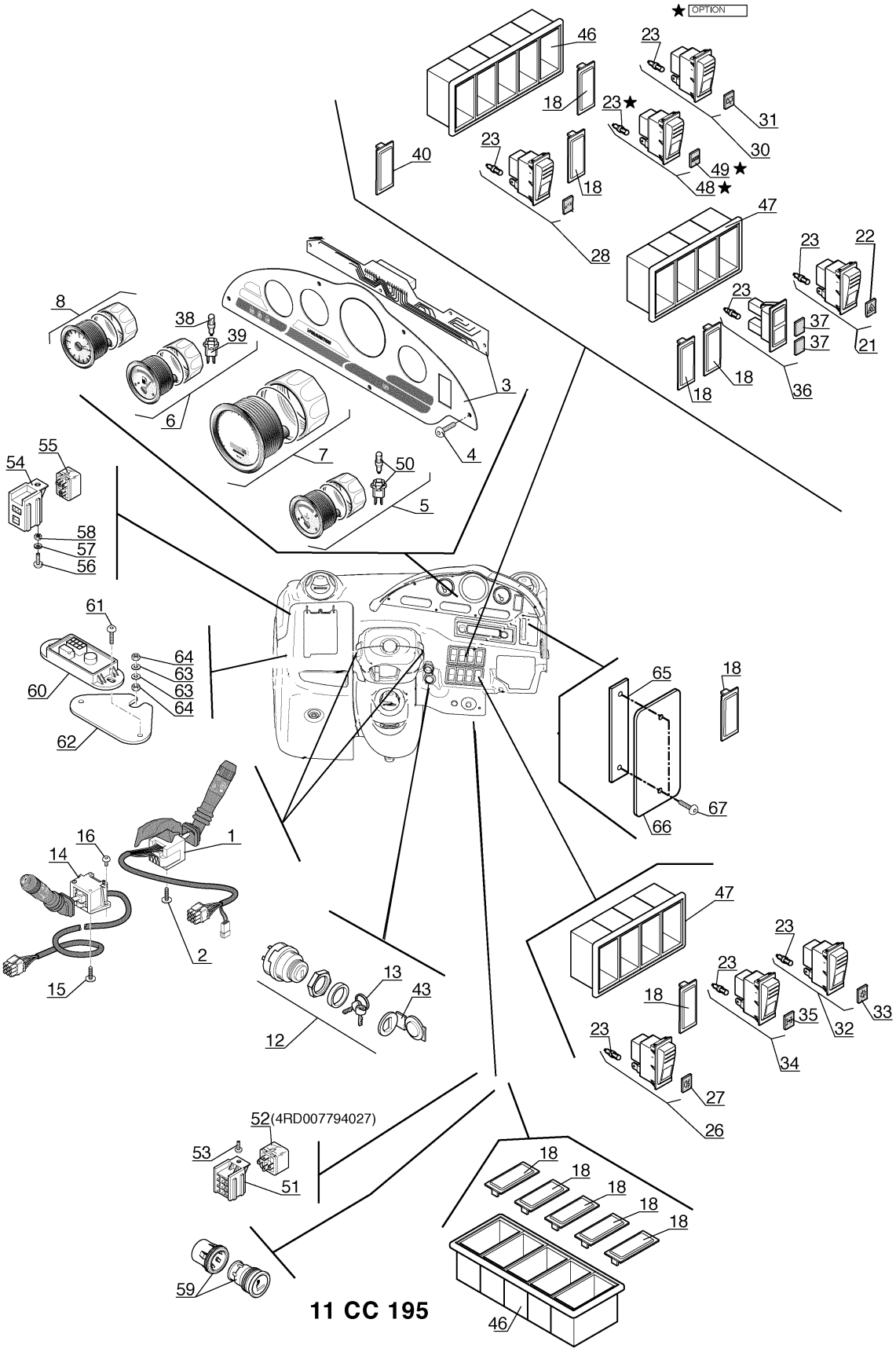
★ OPTION
46
23
18
23★
31
30
40
23
18
49★
48★
47
28
23
22
23
37
37
21
18
18
36
8
38
39
3
6
7
4
50
5
54
55
58
57
56
61
64
63
63
64
60
62
65
18
67
66
16
14
1
2
15
13
43
12
47
23
23
18
35
32
33
34
23
27
26
52(4RD007794027)
53
51
18
18
18
18
18
59
46
11 CC 195

Ref. No.	Part No.	Description	Qty. Req.
01	215218	Switch, Windshield Wiper	1
02	215194	Screw, ST3 5-13 (Black)	2
03	215216	Panel, Warning Lights	1
04	215193	Screw, ST4.2-19 (Black)	5
05	218951	Gauge, Water Temperature	1
06	218578	Gauge, Fuel Level	1
07	218043	Hourmeter	1
08	215222	Clock	1
12	218420	Switch, Ignition	1
13	101792	Key	1
14	215215	Switch, Light	1
15	218456	Screw, ST3 5	1
16	219929	Bolt, M5-10	2
18	218619	Plug	10
21	218613	Switch, Warning Light	1
22	219446	Lens	1
23	217924	Bulb	AR
26	218615	Switch, Fog Light	1
27	215192	Lens	1
28	215191	Switch, Light	1
30	215099	Switch, Rear Wiper	1
31	215098	Lens	1
32	218609	Switch, Transmission Cut-Off	1
33	219450	Lens	1
34	218610	Switch, Wheel Alignment	1
35	219445	Lens	1
36	218608	Light, Warning	1
37	219444	Lens	1
38	218147	Bulb	2
39	219544	Bracket	2
40	218619	Plug	1
43	219917	Cap	1
46	215190	Bracket, Switch	2
47	215189	Bracket, Switch	2
48	218616	Switch, Defoging	1
49	219452	Lens	1
50	219887	Bulb with Bracket	1
51	217847	Bracket, Relay	1
52	218035	Relay (4RD007794027)	1
53	218799	Bolt, M5-8 (Black)	1
54	219691	Bracket, Relay	1
55	218686	Relay, Reversing (4RD007814-011)	1
56	218415	Bolt, M5-16 (Black)	1
57	218459	Washer	1
58	219168	Nut, M5	1
59	217812	Cigarette Lighter	1
60	215397	Module, Transmission Cut-Off	1
61	218725	Bolt, M4-8	2
62	215375	Bracket	1
63	218510	Washer, M8	2
64	217979	Nut, M8	2
65	217810	Plate	1
66	217911	Plate	1
67	218415	Bolt, M5-16 *(Black)*	2
101	215089	AM/FM Radio *(Option)*	1
102	215088	Speaker *(Option)*	2
103	215747	Antenna *(Option)*	1

-- ITEMS NOT SHOWN --

(Hydraulic Carriage - Option)

00	215870	Switch, Hydraulic Carriage Lock	1

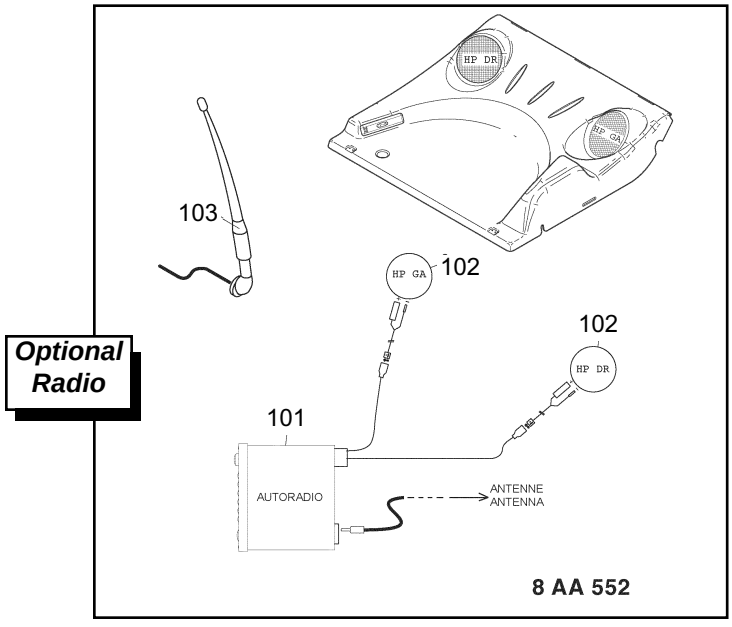

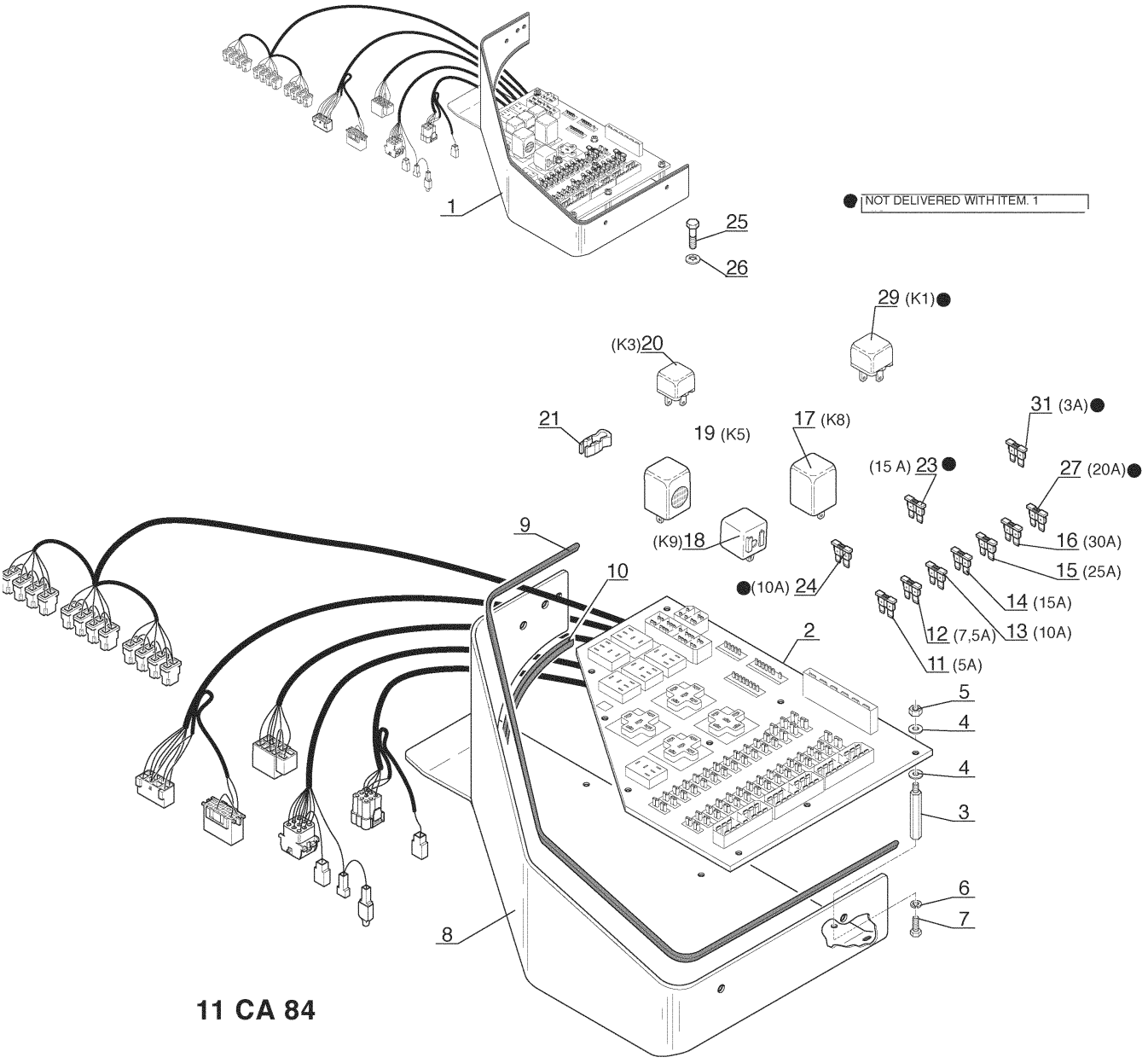
● NOT DELIVERED WITH ITEM. 1
1
25
26
29 (K1)●
(K3)20
21
19 (K5)
17 (K8)
31 (3A)●
(15 A) 23 ●
27 (20A)●
(K9)18
16 (30A)
15 (25A)
●(10A) 24
14 (15A)
12 (7,5A)
13 (10A)
11 (5A)
9
10
2
5
4
4
3
6
7
8
11 CA 84

Ref. No.	Part No.	Description	Qty. Req.
01	215227	Panel, relay and fuses	1
02	215226	Printed circuit	1
03	218658	Spacer	9
04	219146	Washer	18
05	219023	Nut	9
06	219026	Washer	9
07	218357	Bolt	9
08	218748	Bracket	1
09	218841	Weatherstrip	1
10	217795	Weatherstrip	1
11	219949	Fuse (5A)	AR
12	219950	Fuse (7.5A)	AR
13	219951	Fuse (10A)	AR
14	219952	Fuse (15A)	AR
15	219973	Fuse (25A)	AR
16	219974	Fuse (30A)	AR
17	219958	Relay	1
18	219953	Flasher unit	1
19	219939	Buzzer	1
20	219948	Relay	AR
21	218544	Fuse pincers	1
23	219952	Fuse (15A)	AR
25	219070	Bolt	2
26	218379	Washer	2
27[a]	217817	Fuse (20A)	AR
29[a]	218686	Reverse relay	1
31[a]	217799	Fuse (3A)	AR
		-- ITEMS NOT SHOWN --	
		(Maxi Fuse)	
00	218958	Fuse (40A)	2
00	216410	Fuse (60A)	1
00	218959	Fuse (80A)	1

a *Not included with item #1*

NOTE: *Additional relays can be found in other pages under Electrical.*

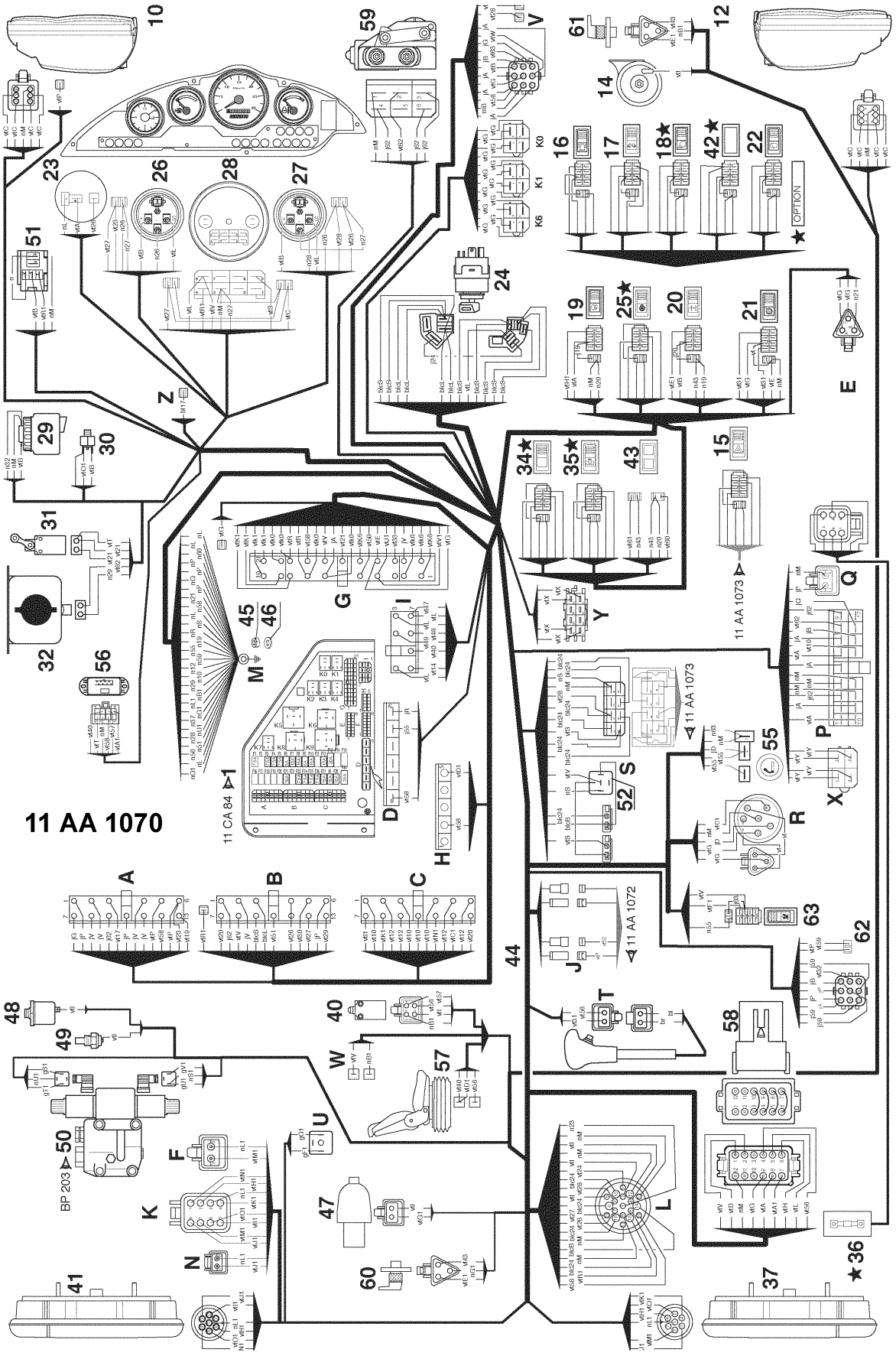
11 AA 1070
11 CA 84
11 AA 1073
11 AA 1072
BP 203
OPTION

Ref. No.	Part No.	Description	Qty. Req.
01	215227	Complete Fuse/Relay Box	1
10	215225	Complete L.H. Front Headlight	1
12	215224	Complete R.H. Front Headlight	1
14	218490	Horn	1
16	218614	Revolving/Beacon Light Switch	1
17	215191	Light Switch	1
18	215767	Light Switch	1
19	218615	Fog Light Switch	1
20	218610	Wheel Alignment Switch	1
21	218609	Transmission Cut-off Switch	1
22	218611	Rear Windshield-wiper Switch	1
23	215222	Clock	1
24	218420	Ignition switch	1
25	215761	Switch	1
26	218578	Fuel Level Switch	1
27	218951	Water Temperature Switch	1
28	218043	Hour Meter	1
29	218857	Brake Fluid Tank	1
30	217932	Stop Switch	1
31	219954	Transmission Cut-off Switch	1
32	219603	Windshield-washer Tank	1
36	218917	Strain-Gauge	1
37	218573	Complete Tail Light	1
40	106496	Handbrake Switch	1
41	218573	Complete Tail Light	1
42	218616	Defogging Switch	1
43	218608	Warning Light	1
44	215221	Main Wire Harness	1
45	217979	Nut	1
46	218510	Washer	1
47	217796	Oil Filter Restriction Switch	1
48	218262	Transmission Oil Pressure switch	1
49	219262	Oil Temperature Sensor	1
50	219648	Electrical Control Valve	1
51	218686	Reversing Relay	1
52	218035	Relay	1
55	217812	Cigarette Lighter	1
56	215397	Transmission Cut-off Module	1
57	215414	Switch	1
58	215220	Connector	1
59	219462	Windshield Wiper Motor	1
60	215219	Wheel Alignment Switch	1
61	219710	Wheel Alignment Switch	1
62	215218	Wheel Alignment Switch	1

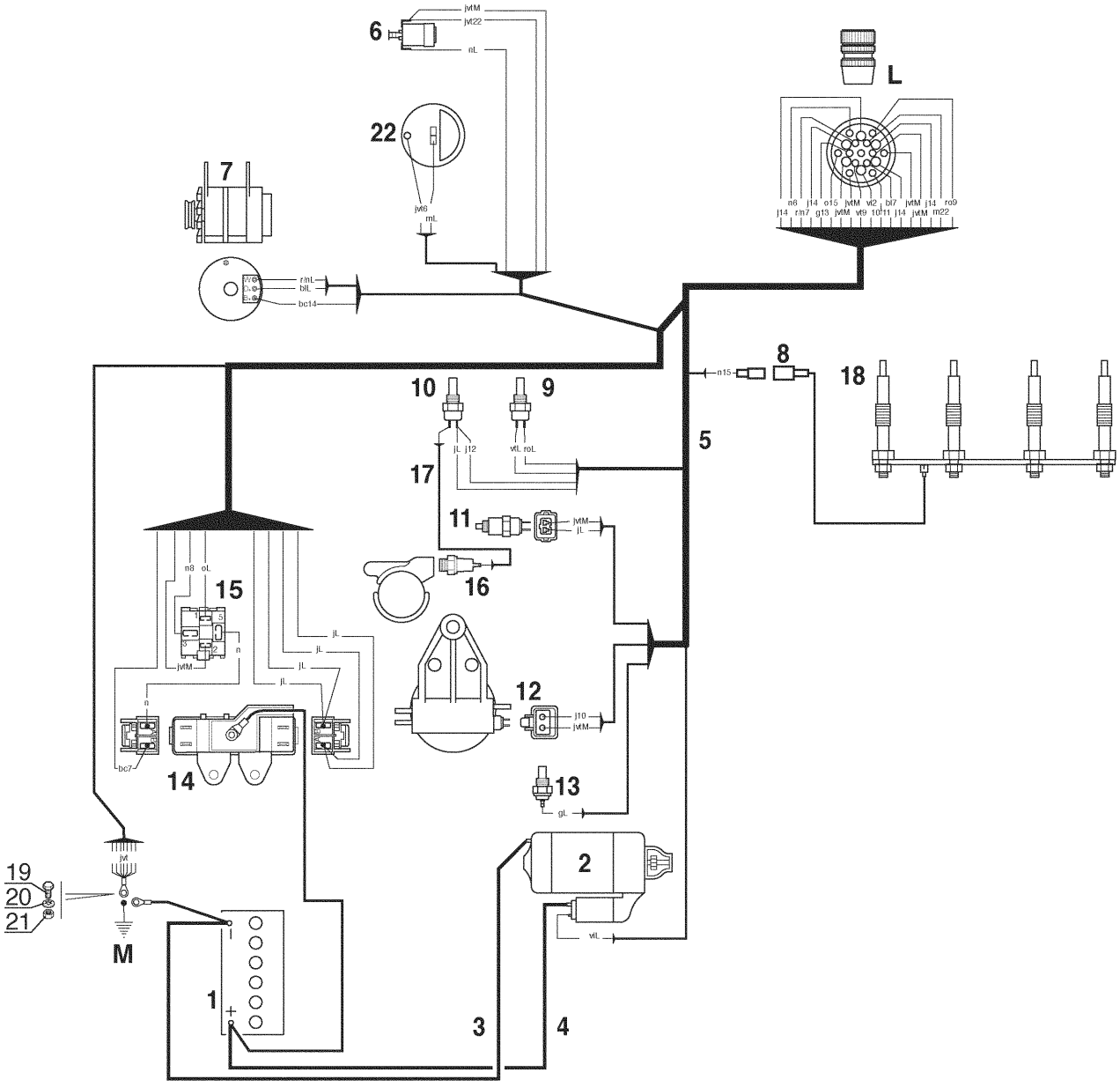

11 AA 1075

Ref. No.	Part No.	Description	Qty. Req.
01[a]	NSS	Battery (850 CCA - 12V - 135 AH)	1
02	219819	Starter	1
03	218952	Ground Cable	1
04	218953	Cable	1
05	215213	Engine Wire Harness	1
06	218620	Air filter sensor	1
07	219993	Alternator	1
08	219839	Wire Harness	1
09	218937	Water Temperature Sensor	1
10	217820	Water Temperature Sensor	1
11	219986	Stop Engine Electrovalve	1
12	219821	Complete Fuel filter	1
13	218262	Engine Oil Pressure Switch	1
14	218957	Fuse Box	1
15	218960	Relay	1
16	215463	Solenoid	1
17	217895	Wire Harness	1
18	219995	Glow Plug	4
19	219613	Bolt	1
20	218408	Washer	1
21	219422	Nut	1
22	217837	Fuel Gauge	1

a *Battery dimensions 13” L x 9” W x 8” H*

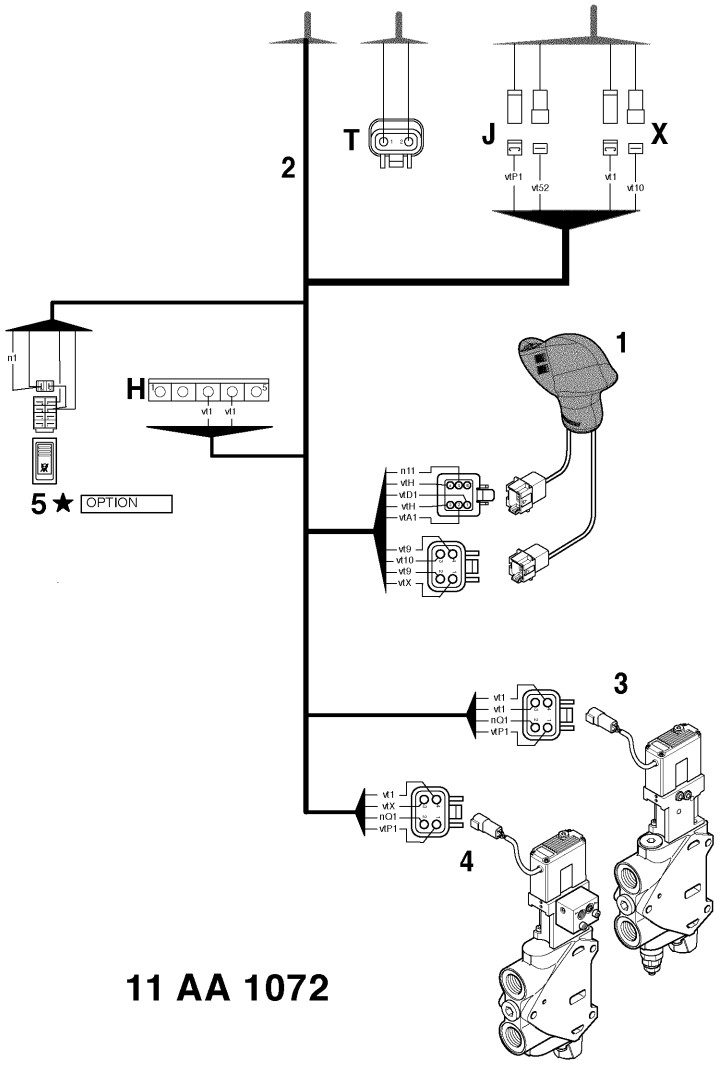
T
J
X
2
1
H
5 ★ OPTION
3
4
11 AA 1072

Ref. No.	Part No.	Description	Qty. Req.
01	215310	Joystick Control Unit	1
02	215221	Main Wire Harness	1
03	215253	Work Section *(Boom Extend)*	1
04	215254	Work Section *(Attachment)*	1
05	215217	Switch *(Option)*	1

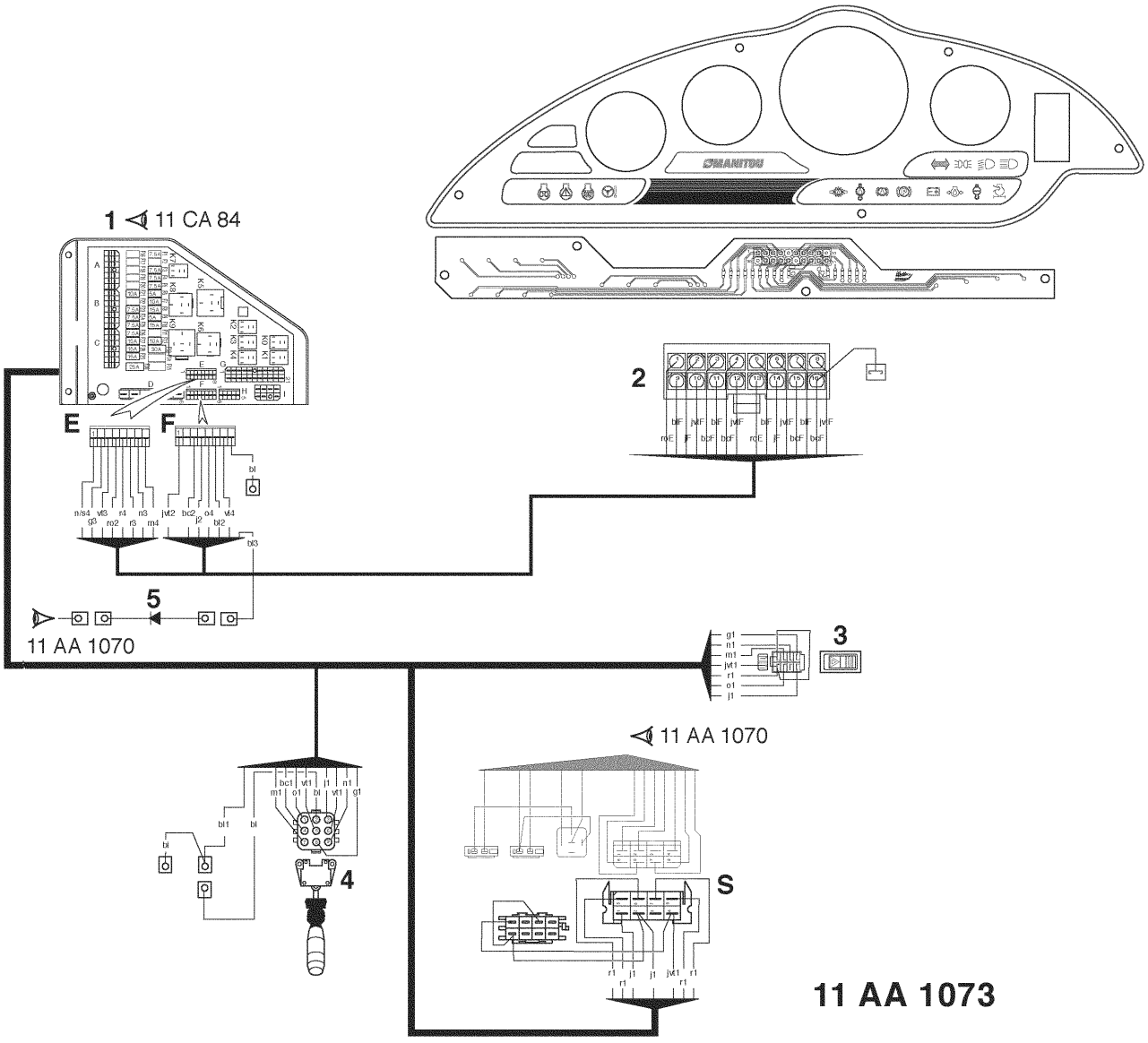
1
11 CA 84
E
F
2
5
11 AA 1070
3
11 AA 1070
4
S
11 AA 1073

Ref. No.	Part No.	Description	Qty. Req.
01	215227	Panel, Fuses and Relays	1
02	215216	Warning Light Panel	1
03	218613	Warning Light Switch	1
04	215215	Light Switch	1
05	218428	Diode	1

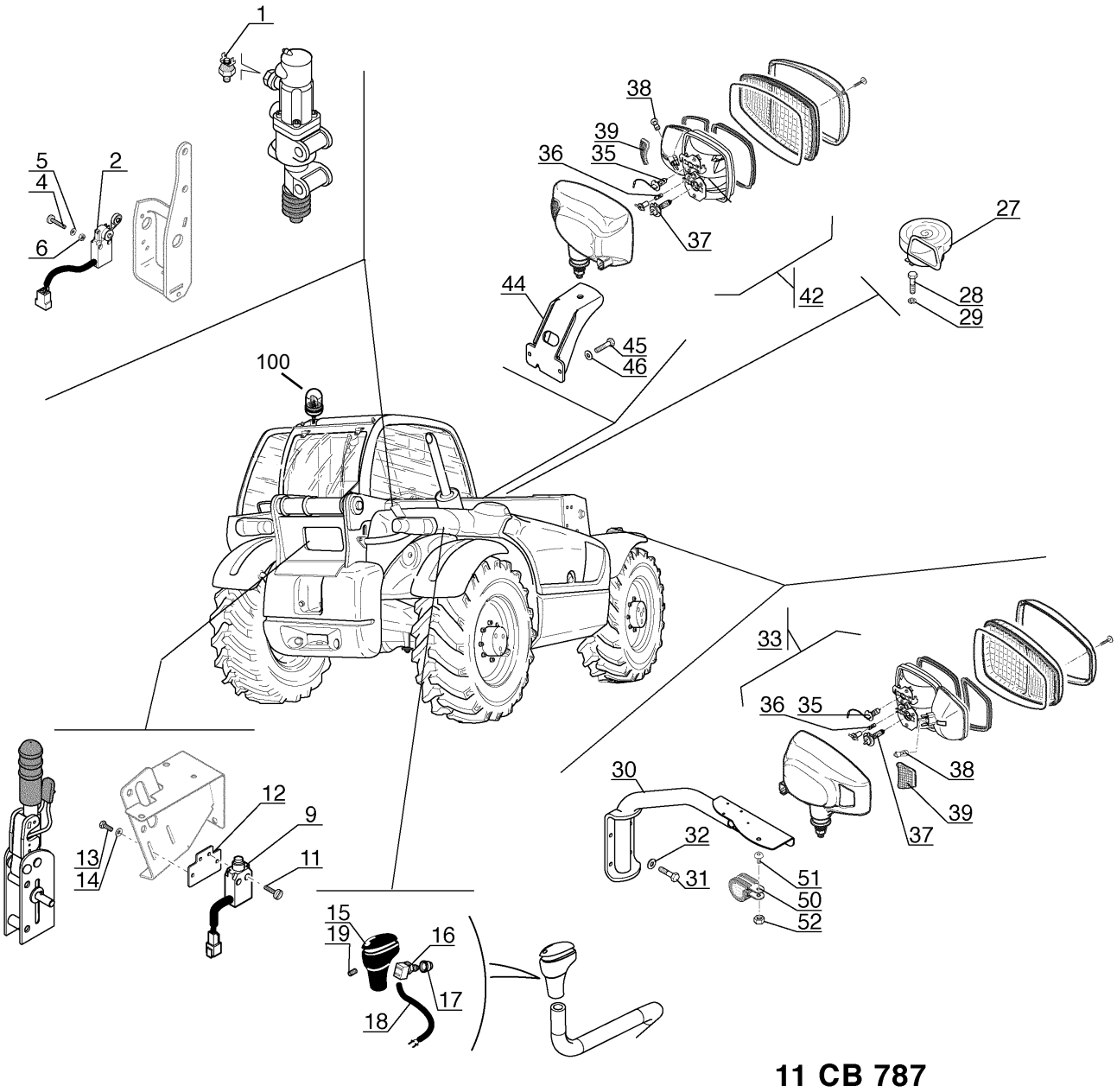
1
5
4
2
6
38
39
36
35
37
27
44
42
28
29
45
46
100
33
36
35
38
39
37
30
32
31
51
50
52
12
9
13
14
11
15
19
16
17
18

11 CB 787

Lights - Lever Switches - Sensors - Part 1 of 2

Ref. No.	Part No.	Description	Qty. Req.
01	217932	Stop Switch	1
02	219954	Transmission Cut-off Switch	1
04	219849	Bolt, M4-25	2
05	219926	Washer	2
06	219023	Nut	2
09	106496	Handbrake Switch	1
11	219611	Bolt, M4-16	1
12	218009	Switch Bracket	1
13	218357	Bolt, M4-10	2
14	219926	Washer	2
15	219224	Cap	1
16	219225	Transmission Cut-off Switch	1
17	219227	Cap	1
18	219228	Wire Harness	1
19	219226	Bolt, M5	1
27	218490	Horn	1
28	219184	Bolt, M8-16	1
29	219054	Washer	1
30	218724	R.H. Front Headlight Bracket	1
31	219055	Bolt, M8-20	4
32	219867	Washer	4
33	215224	R.H. Front Headlight *(complete)*	1
35	219496	Bulb	2
36	219495	Bulb	2
37	219494	Bulb	2
38	215207	Bulb	2
39	215206	Front Direction Lights	2
42	215225	L.H. Front Headlight *(complete)*	1
44	215204	L.H. Front Headlight Bracket	1
45	219055	Bolt, M8-20	2
46	218510	Washer	2
47	219069	Bulb	1
50	219933	Clamp	1
51	218415	Bolt, M5-16	1
52	219168	Nut, M5	1
100	218607	Beacon *(option)*	1

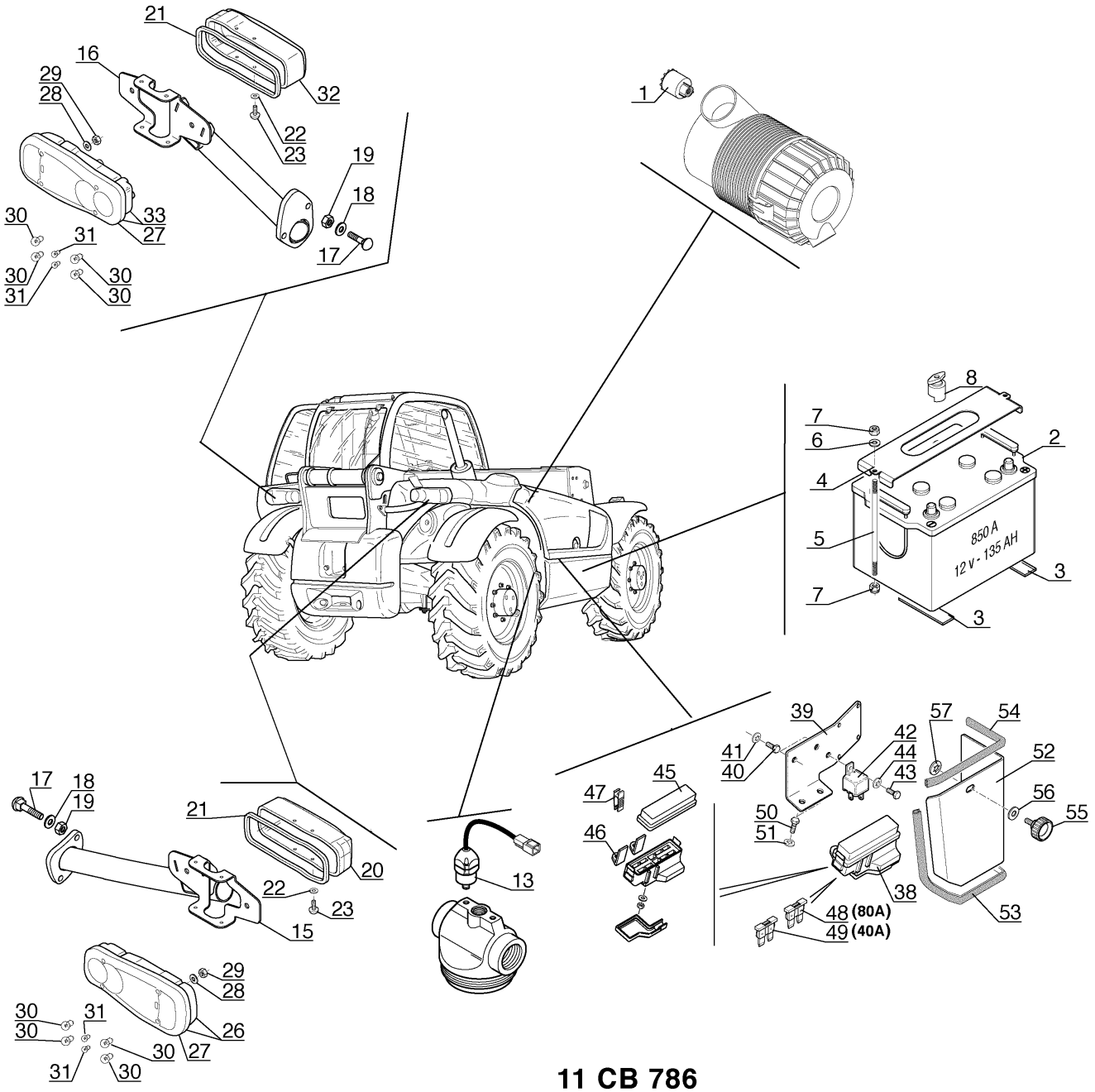
21
16
29
28
32
22
23
19
18
17
33
27
30
31
30
30
30
31
1
8
7
6
2
4
5
3
7
3
850 A
12 v - 135 AH
39
42
44
43
41
40
57
54
52
56
55
50
51
38
48 (80A)
49 (40A)
53
45
47
46
13
17
18
19
21
20
22
23
15
29
28
26
30
27
30
31
30
31

11 CB 786

Ref. No.	Part No.	Description	Qty. Req.
01	218620	Air filter sensor switch	1
02	NSS	Battery (850 CCA - 12V - 135 AH)	1
03	218339	Rubber strip	2
04	217822	Fastening Flange	1
05	218528	Fastening Bar	2
06	218439	Washer	2
07	219022	Nut	4
08	218894	Cap (Green)	1
13	217796	Oil filter sensor switch	1
15	215212	R.H. tail light bracket	1
16	215211	L.H. tail light bracket	1
17	219907	Bolt	4
18	219028	Washer	4
19	219422	Nut	4
20	218638	Tail light fitting	1
21	218691	Weatherstrip	2
22	218690	Washer	8
23	218725	Bolt	8
26	218573	Tail Light	1
27	219591	Tail light lens	2
28	218510	Washer	6
29	219616	Nut	4
30	217797	Bulb	AR
31	217798	Bulb	AR
32	218639	Tail light fitting	1
33	218573	Tail Light	1
38	218957	Fuse box	1
39	218955	Bracket	1
40	219070	Bolt, M6-20	2
41	218379	Washer	2
42	218960	Relay	1
43	219021	Bolt	1
44	218379	Washer	1
45	218986	Cover	1
46	218987	Bracket	2
47	218988	Fuse pincers	1
48	218959	Fuse (80A)	2
49	218958	Fuse (40A)	2
50	219021	Bolt	2
51	218379	Washer	2
52	218956	Housing	1
53	215890	Weatherstrip	1
54	215890	Weatherstrip	1
55	218482	Bolt	1
56	218510	Washer	1
57	218828	Washer	1

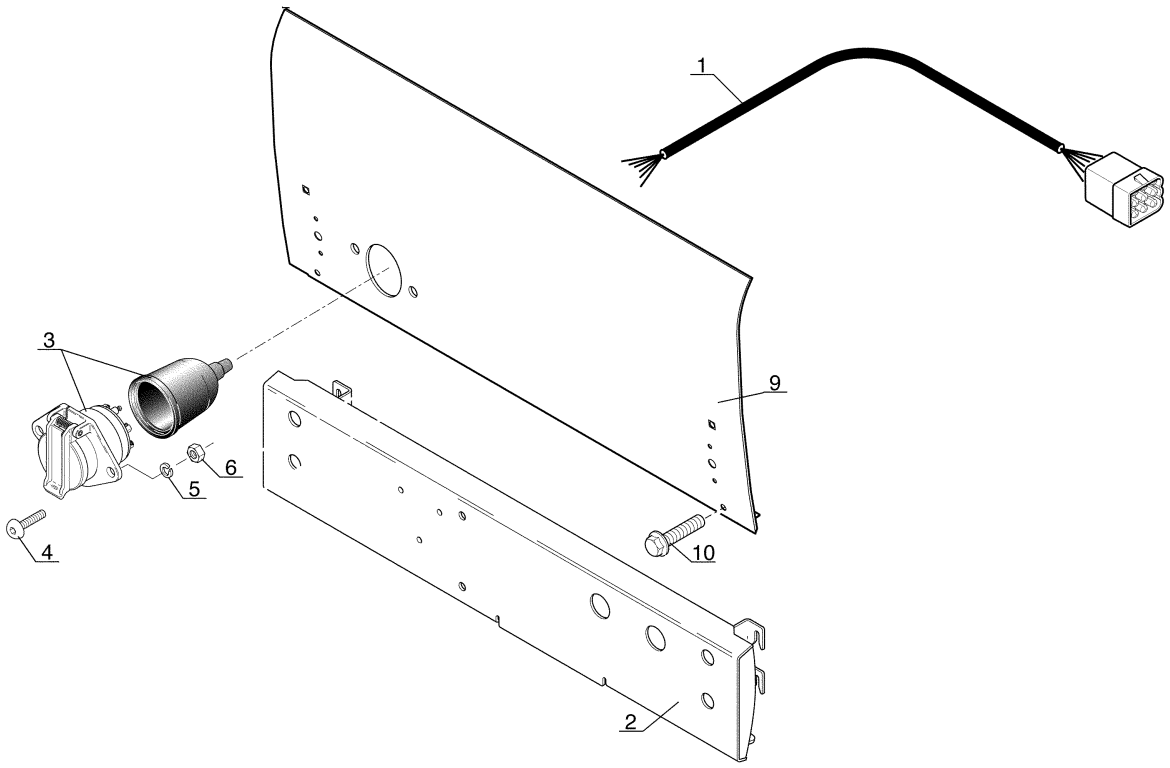

11 AA 1074
11 CB 623

Electrical - Trailer Light Connector

Ref. No.	Part No.	Description	Qty. Req.
01	215214	Wire Harness	1
02	218906	Rear Panel / Plate	1
03	215779	Wiring Connector / Trailer	1
04	215778	Bolt, M8-20-10.9	2
05	219054	Washer	2
06	219616	Nut, M8	2
09	215378	Rear Panel	1
10	218907	Bolt, M6x20	4

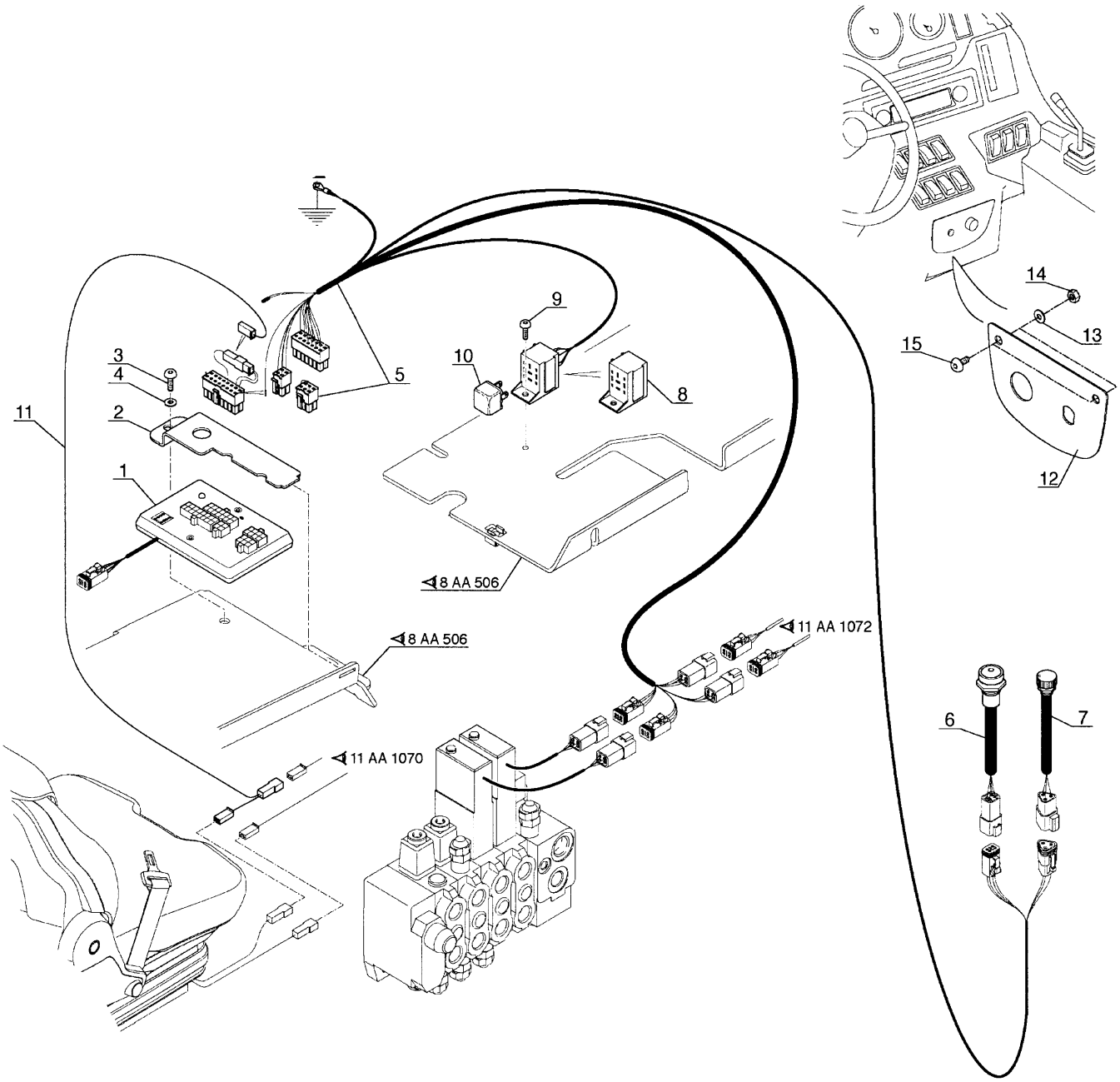

11 CB 831

Ref. No.	Part No.	Description	Qty. Req.
01	215040	Module	1
02	215041	Bracket	1
03	218445	Bolt, M6-25	1
04	215789	Washer, M6	1
05	215043	Wire Harness	1
06	215853	Button / LED Harness	1
	215452	Decal	1
07	215852	Potentiometer Harness	1
	215453	Decal	1
08	217847	Relay Bracket	1
09	219929	Bolt	1
10	218035	Relay	1
11	215039	Wire Harness, Safety	1
12	215042	Bracket	1
13	219926	Washer	2
14	219023	Nut, M4	2
15	218511	Bolt, M4-12 10.9	2

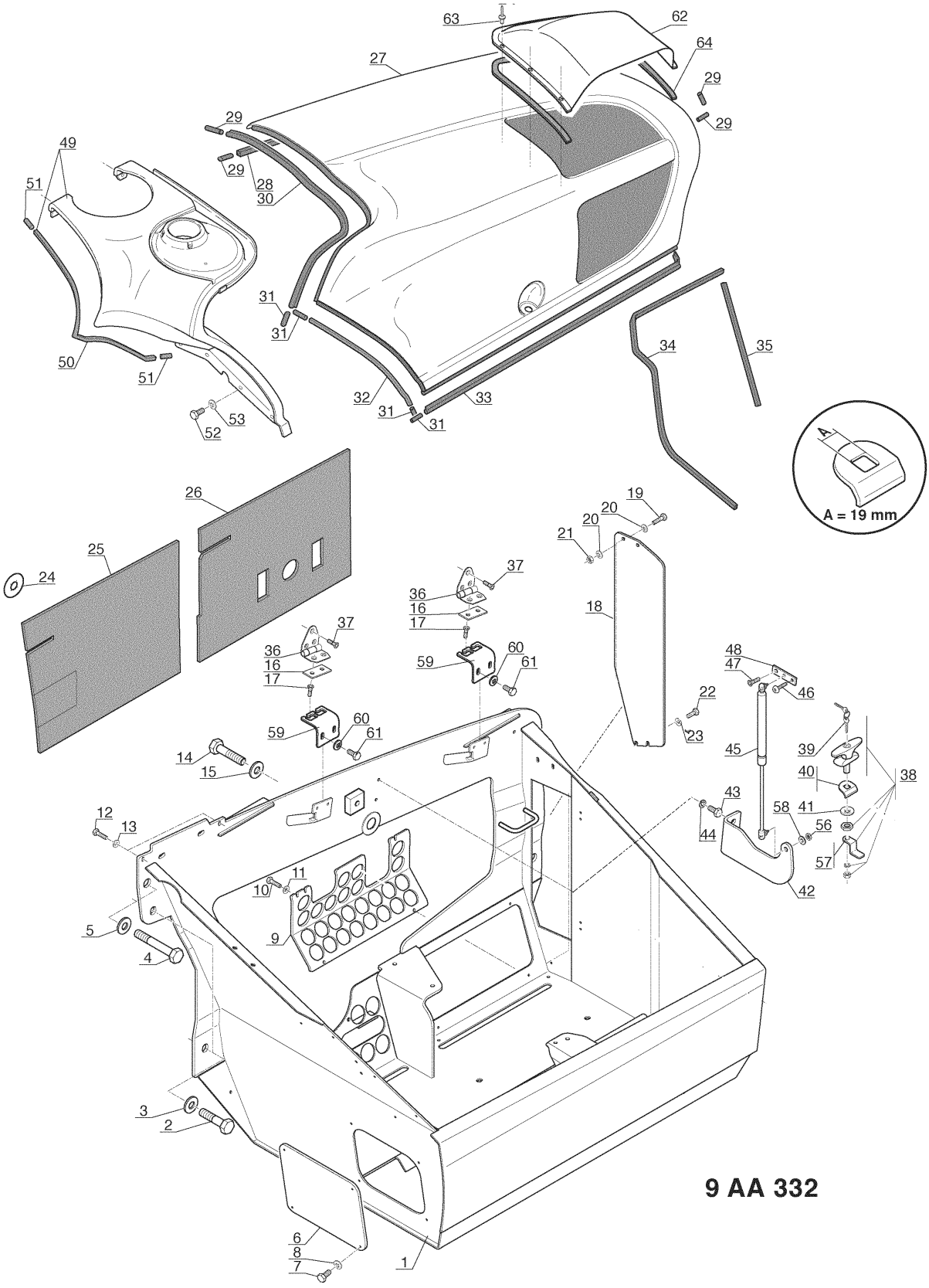
A = 19 mm
9 AA 332

Hoods - Part 1 of 2

Ref. No.	Part No.	Description	Qty. Req.
01	215317	Engine compartment	1
02	219630	Bolt, M16-180-8.8	2
03	219609	Washer	2
04	219628	Bolt, M16-60-8.8	4
05	219927	Washer	4
06	218983	Cover Plate	1
07	219159	Bolt, M6-10-8.8	4
08	218379	Washer	4
09	218966	Cover Plate	1
10	219159	Bolt, M6-10-8.8	4
11	218717	Washer	4
12	219615	Bolt, M6-25-8.8	2
13	218379	Washer	2
14	219851	Bolt, M16-50-8.8	1
15	219927	Washer	1
16	218489	Bracket	2
17	219860	Bolt, M6-16-10.9	4
18	218945	Plate	1
19	219070	Bolt, M6-20-8.8	2
20	218379	Washer	4
21	219022	Nut	2
22	219159	Bolt, M6-10-8.8	2
23	218379	Washer	2
24	218914	Clip	8
25	218985	Sound-proofing foam	1
26	218984	Sound-proofing foam	1
27[a]	218877	Complete engine hood *(front)*	1
28	218777	Weatherstrip	1
29	218856	Weatherstrip	4
30	218782	Weatherstrip	1
31	218856	Weatherstrip	4
32	218778	Weatherstrip	1
33	218779	Weatherstrip	1
34	218777	Weatherstrip	1
35	218778	Weatherstrip	1
36	218422	Hinge	2
37	219860	Bolt, M6-16-10.9	6
38	218786	Handle	1
39	101792	Key	AR
40	218797	Bracket	1
41	218798	Washer	1
42	218949	Bracket	1
43	219184	Bolt, M8-16-8.8	2
44	219054	Washer	2
45	218911	Air spring	1
46	218491	Bolt, M8-20 (Black)	1
47	219058	Bolt, M8-20-10.9	1
48	218962	Bracket	1
49	218878	Complete engine hood *(rear)*	1
50	218783	Weatherstrip	1
51	218856	Weatherstrip	2
52	219021	Bolt, M6-16-8.8	4
53	218379	Washer	4
56	215879	Cam, hood latch	1
58	218510	Washer	1
59	215316	Hinge Bracket	2
60	219867	Washer	4
61	219184	Bolt, M8-16	4
62	215878	Deflector	1
63	219920	Rivet	8
64	215315	Weatherstrip	1

a *Engine hood includes items 28-41and 57.*

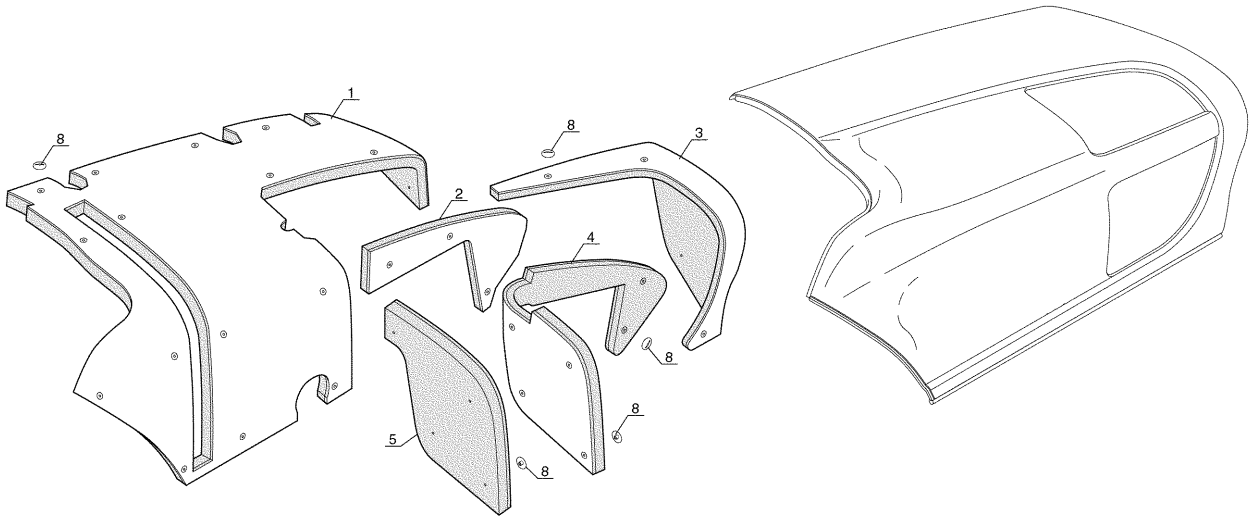

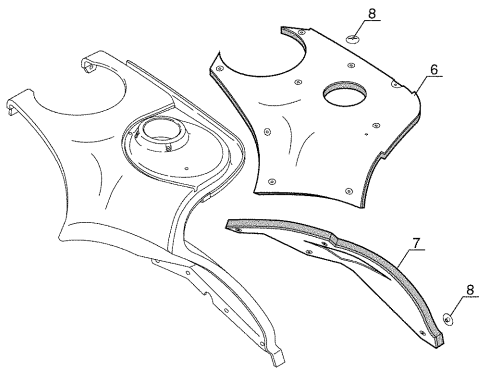

9 AB 87

Ref. No.	Part No.	Description	Qty. Req.
01	218898	Sound-proofing foam	1
02	218902	Sound-proofing foam	1
03	218901	Sound-proofing foam	1
04	218899	Sound-proofing foam	1
05	218900	Sound-proofing foam	1
06	218903	Sound-proofing foam	1
07	218904	Sound-proofing foam	1
08	218947	Clip	AR

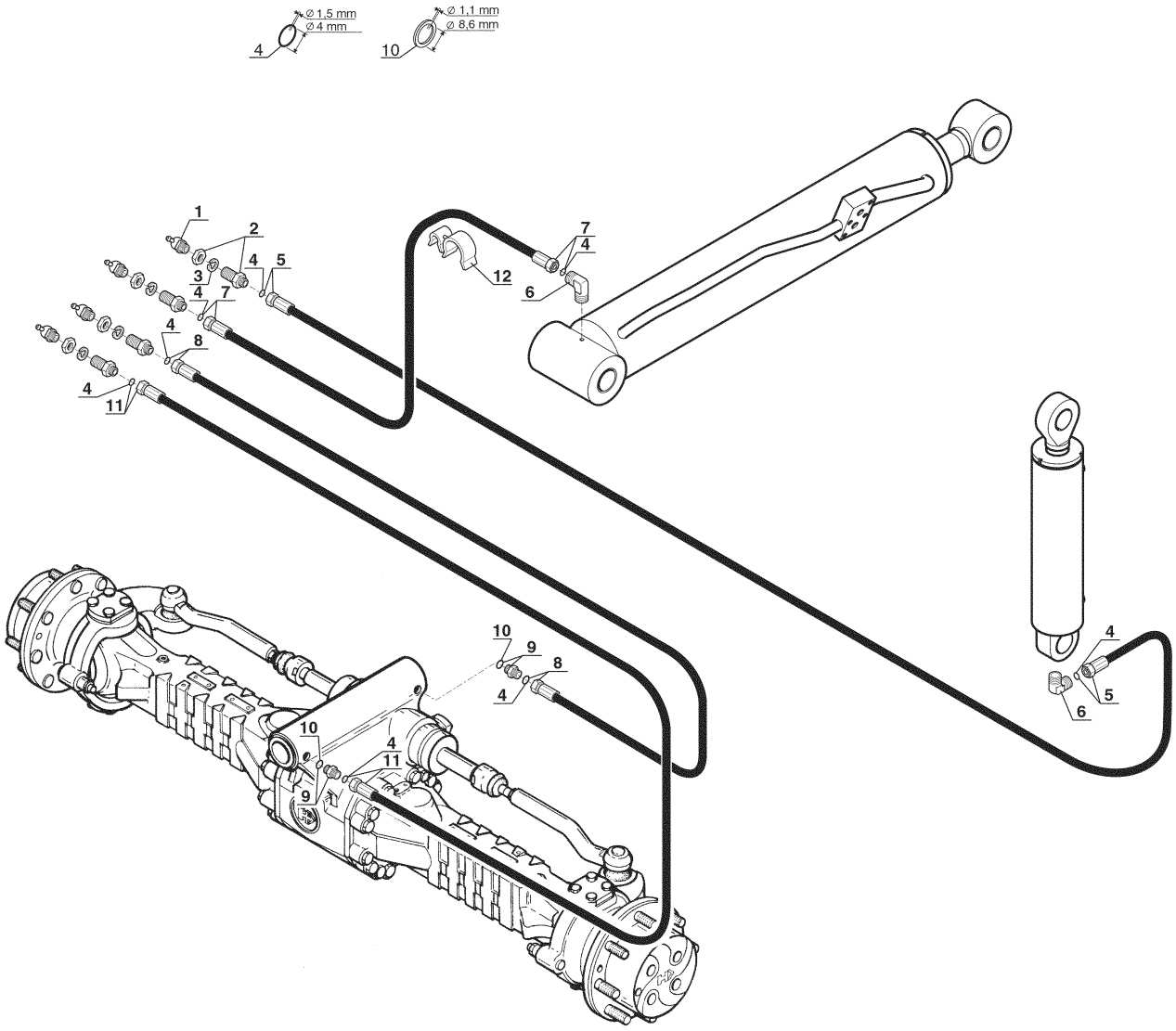

17 AA 16

Ref. No.	Part No.	Description	Qty. Req.
01	218397	Grease fitting	4
02	218742	Adapter	4
03	219053	Washer	4
04	218092	O-Ring	AR
05	218744	Hose	1
06	218870	Adapter	2
07	218869	Hose	1
08	218744	Hose	1
09	218772	Adapter	2
10	217985	Seal.	AR
11	218743	Hose	1
12	218874	Clamp	1

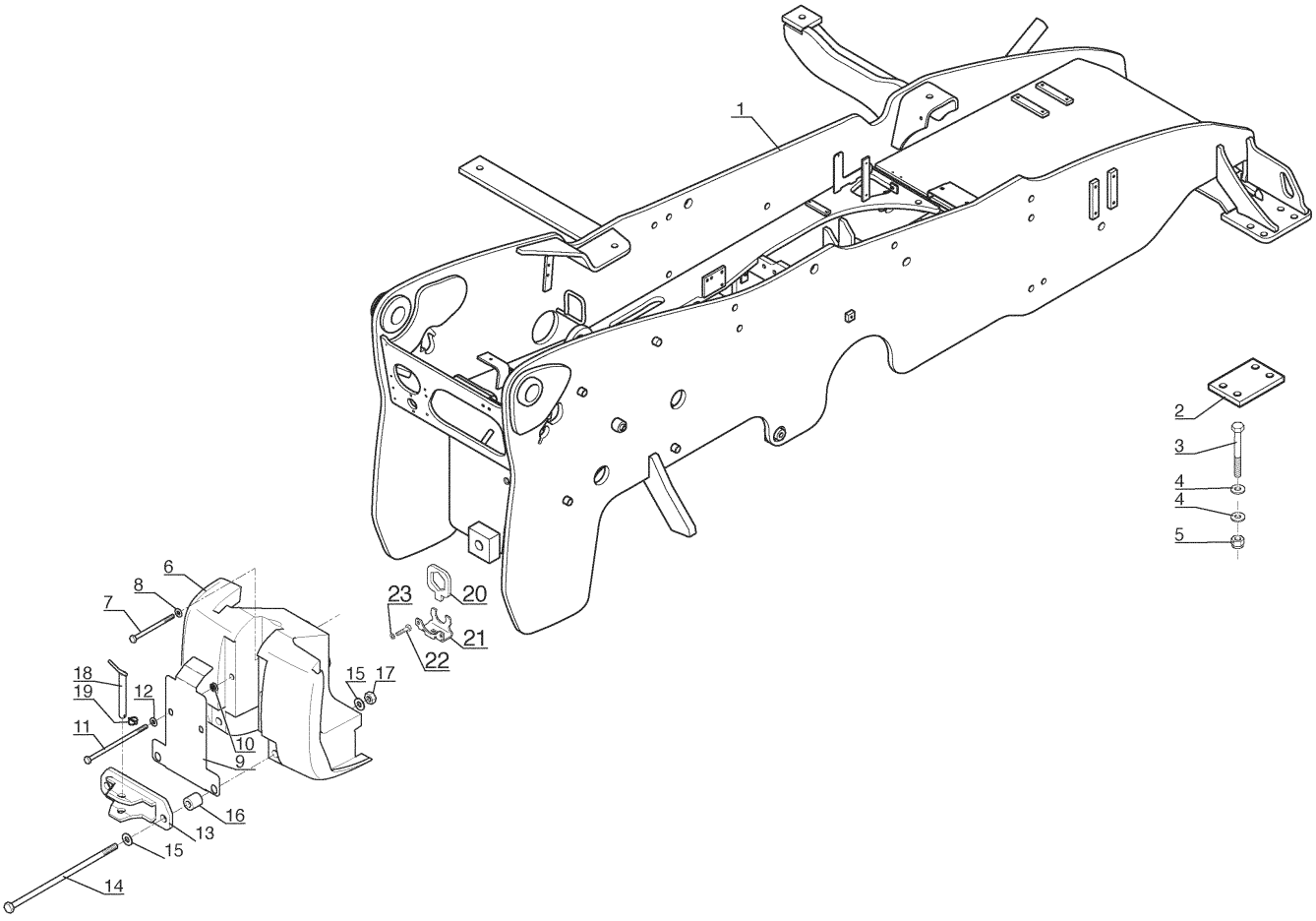

6 AA 379

Ref. No.	Part No.	Description	Qty. Req.
01	NSS	Frame	1
02	218974	Axle Plate	2
03	219911	Bolt, M20-230	8
04	216981	Washer, Z20	16
05	218423	Nut, M20	8
06	NSS	Counterweight	1
07	219911	Bolt, M20-230	1
08	219857	Washer	AR
09	217841	Plate	1
10	218416	Stop	2
11	215884	Bolt, M20-440	2
12	219857	Washer, M20	4
13	217836	Towing hook	1
14	217839	Bolt, M30-560-85-10.9ZN12	2
15	218412	Washer, M30	4
16	217838	Spacer	2
17	218413	Nut, M30	2
18	217834	Towing spindle	1
19	219038	Pin	1
20	215980	Nut, Cage	2
21	215981	Stop	2
22	219055	Bolt, M8-20-8.8	4
23	219054	Washer, W8	4

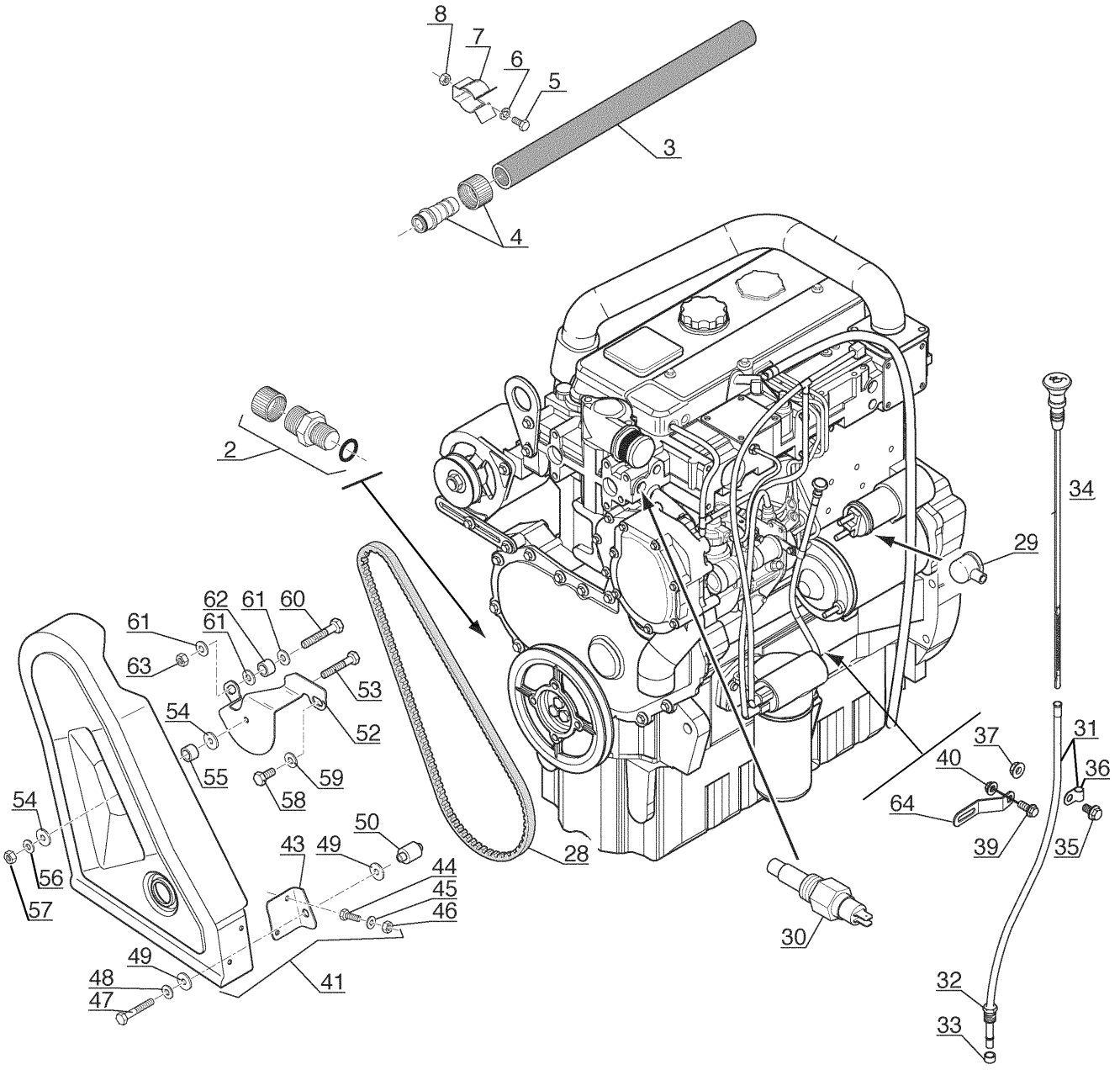
8
7
6
5
3
4
2
34
29
62
61
60
61
61
63
53
54
52
55
59
58
54
50
43
49
44
45
46
56
57
49
48
47
41
28
30
37
31
40
36
64
39
35
32
33

AP 2134

Ref. No.	Part No.	Description	Qty. Req.
02	218542	Drain plug	1
03	218543	Hose	1
04	219163	Adapter	1
05	218357	Bolt	1
06	219026	Washer	1
07	218374	Clip	1
08	219023	Nut	1
28	219996	Alternator Belt	1
29	218373	Cap *(red)*	1
30	218937	Water temperature sensor	1
31	216927	Tube	1
32	219101	Nut	1
33	219102	Olive	1
34	219408	Gauge	1
35	217856	Bolt	1
36	217857	Clamp	1
37	219084	Nut	1
39	217858	Bolt	1
40	217851	Nut	1
41	215167	Housing, Complete *(Includes items 41-46.)*	1
43	215165	Bracket, Housing	1
44	219021	Bolt, M6-16	2
45	218439	Washer	2
46	218344	Nut, M6	2
47	218810	Bolt, M8-100	1
48	219054	Washer, W8	1
49	218510	Washer, L8	1
50	215164	Spacer	1
52	215163	Bracket	1
56	218510	Washer, L8	1
57	219169	Nut	1
58	219204	Bolt, M10-20	1
59	219028	Washer, M10	1
60	219071	Bolt, M10-80	1
61	219028	Washer, M10	3
62	218530	Washer,	1
63	219269	Nut	1
64	215162	Bracket, Dipstick	1

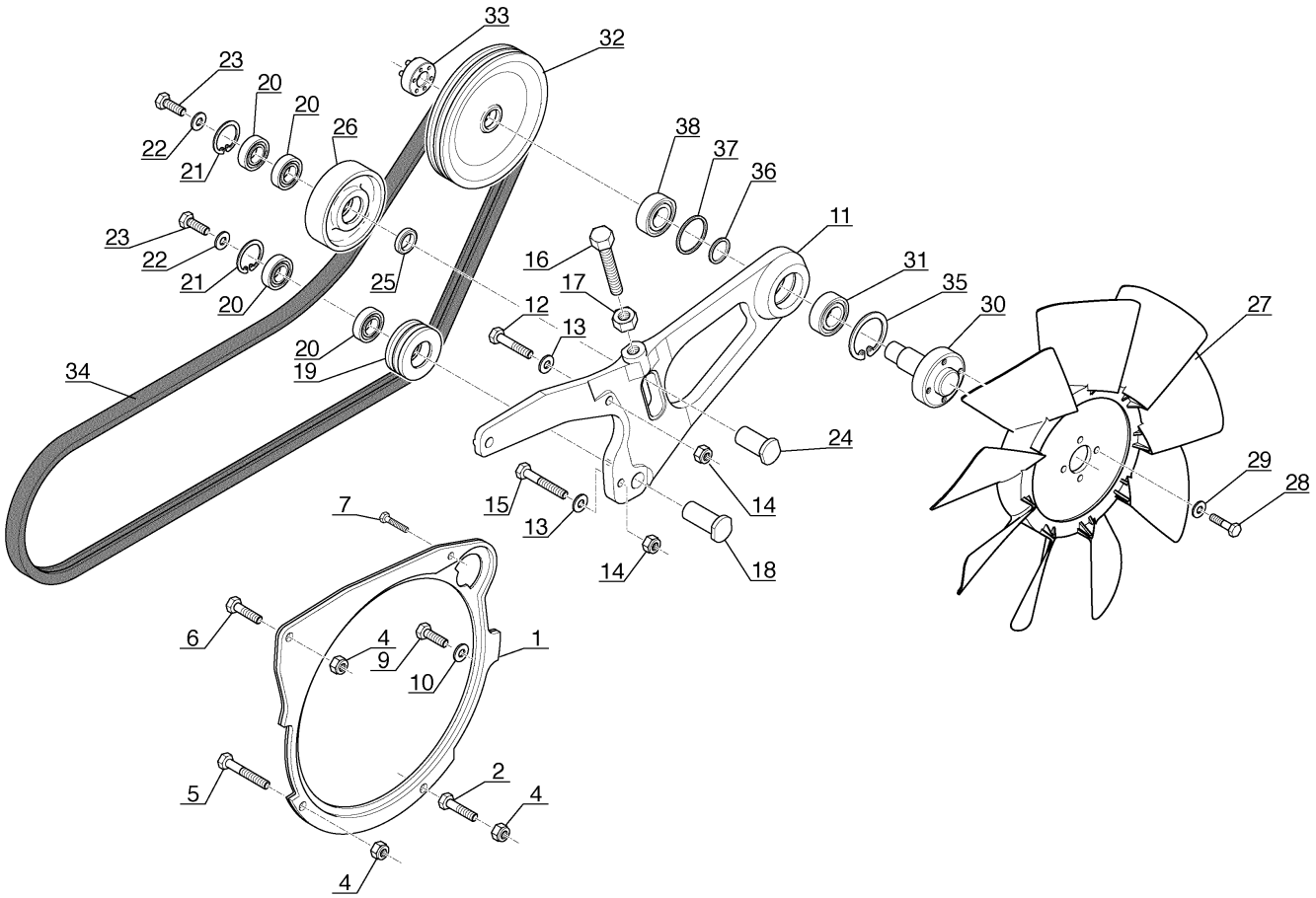
33
32
23
20
20
26
22
21
38
37
36
11
23
22
21
20
25
16
17
31
35
30
27
12
13
20
19
34
24
29
28
15
13
14
14
18
7
6
4
9
10
1
5
2
4
4

4 AA 639

Ref. No.	Part No.	Description	Qty. Req.
01	218672	Housing	1
02	219626	Bolt	1
04	219063	Nut	3
05	219048	Bolt	1
06	219625	Bolt	1
07	219868	Bolt	1
09	219870	Bolt	1
10	219919	Washer	1
11	105978	Fan bracket	1
12	219614	Bolt	1
13	219919	Washer	2
14	219063	Nut	2
15	219048	Bolt	1
16	218570	Bolt	1
17	218319	Nut	1
18	218677	Roller axle	1
19	218787	Pulley	1
20	218348	Bearing	4
21	219042	Snap ring	2
22	218572	Washer	2
23	219064	Bolt	2
24	218667	Roller axle	1
25	218668	Spacer	1
26	218678	Roller	1
27	218884	Sucker fan	1
28	219610	Bolt	4
29	218510	Washer	4
30	218886	Hub	1
31	219040	Bearing	1
32	217835	Fan pulley	1
33	218622	Hub	1
34	219956	Fan belt	1
35	218508	Snap ring	1
36	218739	Bushing	1
37	218740	Bushing	1
38	219040	Bearing	1

NOTE: *The fan belt pulley on the engine (not shown) is machined onto the flywheel. Refer to "Engine - Flywheel" for more information.*

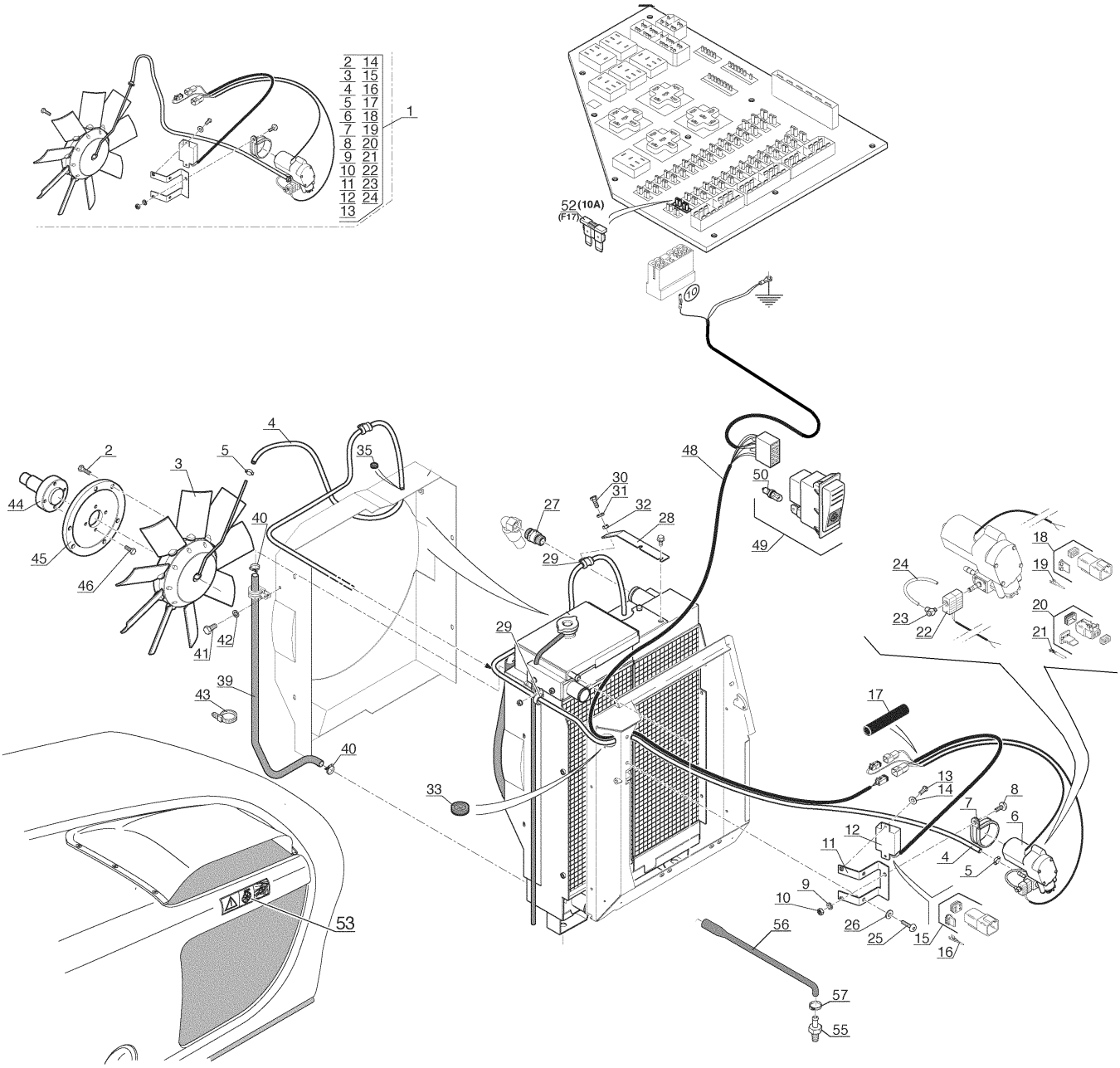
2 14
3 15
4 16
5 17
6 18
7 19
8 20
9 21
10 22
11 23
12 24
13
1
52 (10A)
(F17)
4 AA 704

Fan - Reversible (Option)

Ref. No.	Part No.	Description	Qty. Req.
01	215773	Fan Assembly	1
		(Refer to illustration for a listing of parts included.)	
02	215393	Flanged Bolt	6
03	215418	Fan *(only)*	1
04	215388	Hose, *(1500 mm long)*	1
05	215387	Clamp	2
06	215386	Compressor	1
07	215385	Clamp	1
08	219872	Bolt, M8 - 30	1
09	219054	Washer, M8	1
10	219616	Nut, M8	1
11	215390	Compressor Bracket	1
12	215384	Time Switch	1
13	218511	Bolt, M4-12 10.9	2
14	218690	Washer, M4	2
15	215770	Connector, 4-way	1
16	219261	Male Terminal	2
17	215389	Sheath	1
18	219260	Connector, 2-way	1
19	219261	Male Terminal	2
20	215769	Connector, 2-way	1
21	217766	Connection	1
22	215383	Magnetic Coil	1
23	215382	Connection	1
24	215381	Hose *(118 mm long)*	1
25	218409	Bolt M6-16 10.9	2
26	218439	Washer, M6	2
27	215069	Fitting	1
28	215068	Hose Bracket	1
29	215391	Clamp	2
30	219055	Bolt, M8-20	1
31	219054	Washer, M8	1
32	219616	Nut, M8	1
33	218545	Cable Grommet	1
35	215763	Cable Grommet	1
39	215757	Hose	1
40	218497	Clamp	2
41	219021	Bolt, M6-16	1
42	219052	Washer, M6	1
43	218561	Clamp	3
44	215067	Hub	1
45	215772	Flange	1
46	219184	Bolt, M8-18	4
48	215066	Wire Harness	1
49	215761	Switch	1
50	217924	Bulb	1
52	215760	Fuse (10A)	1
53	215754	Decal	1
55	217766	Fitting	1
56	215392	Hose *(410 mm long)*	1
57	218737	Clamp	1

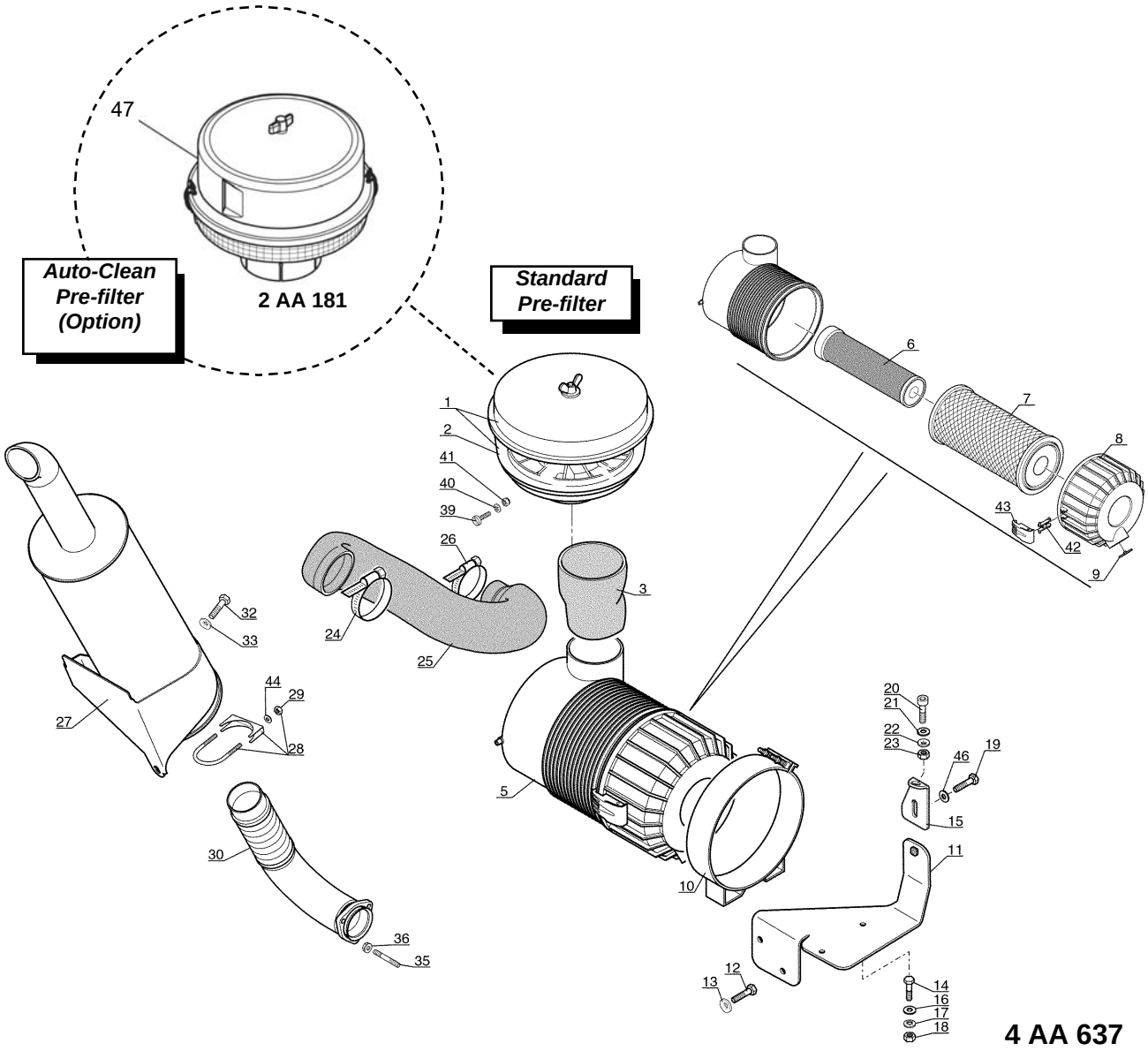
47
Auto-Clean Pre-filter (Option)
2 AA 181
Standard Pre-filter
1
2
41
40
39
26
24
25
3
6
7
8
43
42
9
32
33
27
44
29
28
30
36
35
5
10
20
21
22
23
46
19
15
11
12
13
14
16
17
18

4 AA 637

Ref. No.	Part No.	Description	Qty. Req.
01[a]	218591	Pre-filter	1
02	218635	Tank	1
03	219967	Hose	1
05	218589	Air filter	1
06	219979	Safety air filter cartridge	1
07	219980	Air filter cartridge	1
08	219418	Cover	1
09	219411	Valve	1
10	218590	Clamp	1
11	217842	Air filter bracket	1
12	219055	Bolt	2
13	219867	Washer	2
14	219055	Bolt	2
15	218785	Bracket	1
16	218510	Washer	2
17	219867	Washer	2
18	219616	Nut	2
19	219055	Bolt	1
20	218493	Bolt	1
21	218773	Washer	1
22	219867	Washer	1
23	219616	Nut	1
24	218775	Clamp	1
25	219968	Hose	1
26	218470	Clamp	1
27	217845	Muffler	1
28	218636	Clamp	1
29	219616	Nut	1
30	217846	Exhaust pipe	1
32	219055	Bolt	3
33	219867	Washer	3
35	217885	Stud-bolt	3
36	219081	Nut	3
39	219036	Bolt	3
40	219926	Washer	3
41	219150	Nut	3
42	219420	Rod	2
43	219419	Locker	2
44	218510	Washer	2
46	219867	Washer	1
47	215750	Auto-Clean pre-filter *(option)*	1

a *Standard pre-filter*

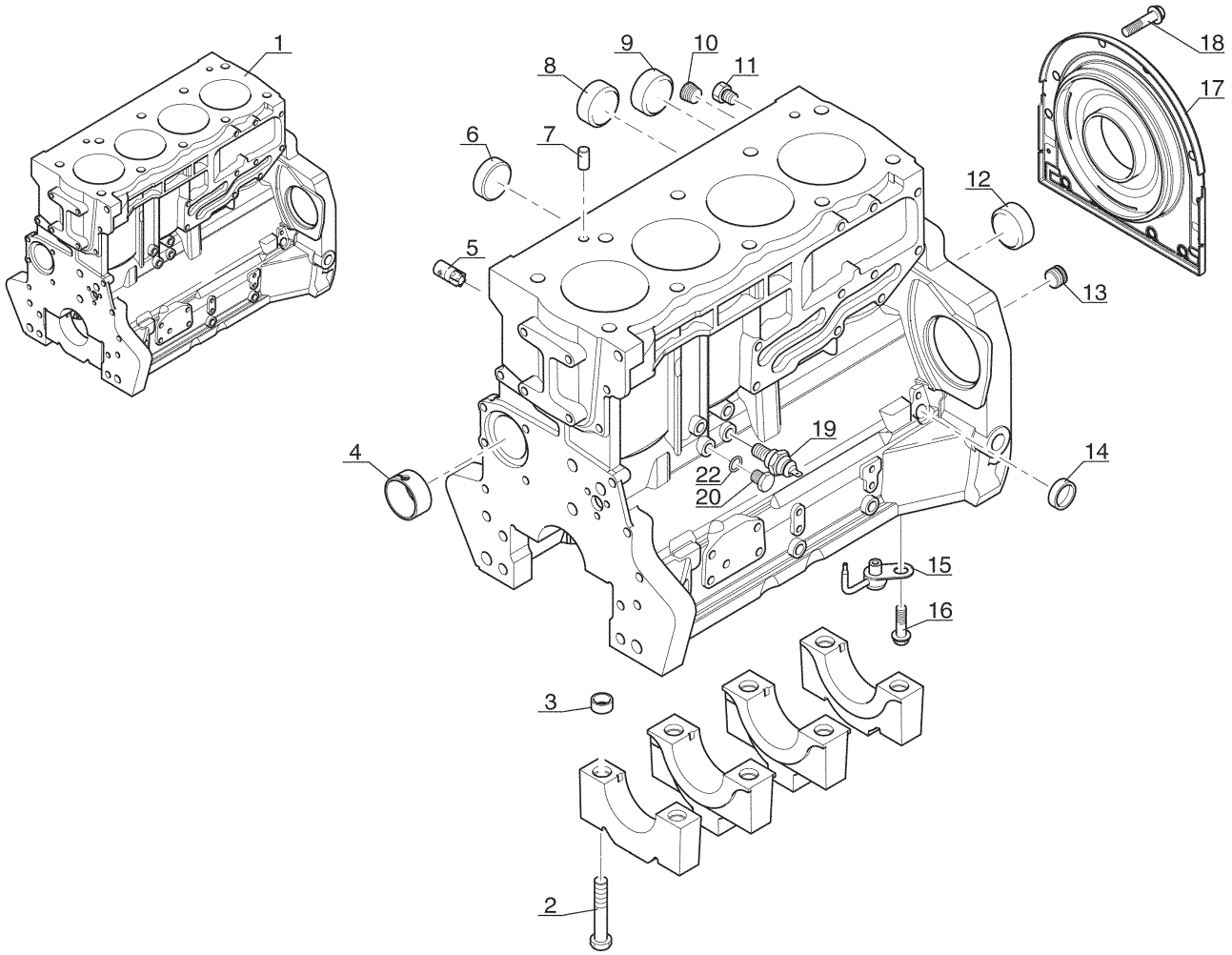

AP 1490

Ref. No.	Part No.	Description	Qty. Req.	Ref. No.	Part No.	Description	Qty. Req.
01	219715	Cylinder block	1	12	219717	Plug	1
02	218337	Bolt	10	13	219719	Plug	1
03	218334	Spacer	10	14	219726	Plug	1
04	219716	Bushing	1	15	219723	Fuel jet	4
05	219722	Plug	1	16	219107	Bolt	4
06	219721	Plug	1	17	219724	Housing	1
07	219421	Centering pin	2	18	219725	Bolt	8
08	219718	Plug	2	19	218262	Engine oil pressure switch	1
09	218338	Plug	1	20	219085	Bolt	1
10	218327	Plug	1	22	216913	Washer	1
11	219720	Plug	2				

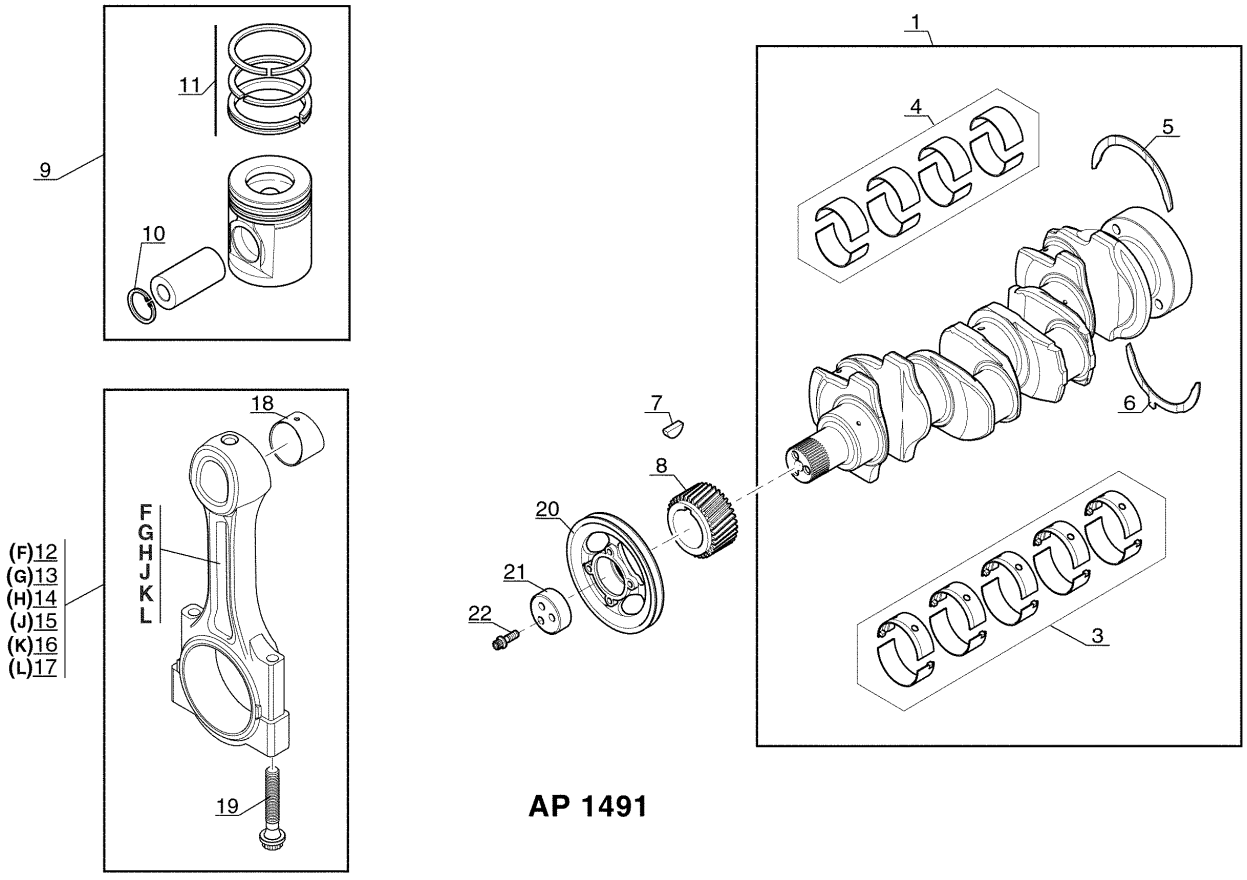

AP 1491

Ref. No.	Part No.	Description	Qty. Req.
01	217869	Crankshaft	1
03	219729	Main Bearing Kit (std.)	1
	217861	Bearing kit (+0.254 mm)	AR
	216912	Bearing kit (+0.508 mm)	AR
	217862	Bearing kit (+0.762 mm)	AR
04	215178	Rod Bearing kit (std.)	1
	217863	Bearing kit (+0.254 mm)	AR
	217864	Bearing kit (+0.508 mm)	AR
	217865	Bearing kit (+0.762 mm)	AR
05	218312	Washer	2
	217828	Washer (+0.19 mm)	AR
06	218313	Washer	2
	217829	Washer (+0.19 mm)	AR
07	218325	Key	1
08	219741	Gear	1
09	217870	Piston (std.)	4
	219405	Piston (+0.50 mm)	4
	215185	Piston (+1.0 mm)	4
10	219405	Snap ring	2
11	217871	Kit piston ring	4
12	219733	Connecting rod (F)	4
13	219734	Connecting rod (G)	4
14	219735	Connecting rod (H)	4
15	219736	Connecting rod (J)	4
16	219737	Connecting rod (K)	4
17	219738	Connecting rod (L)	4
18	219739	Bushing	1
19	219740	Bolt	2
20[a]		Pulley	1
	219097	Single Groove	
	215897	Double Groove *(for A/C)*	
21	219098	Spacer	1
22	219099	Bolt	3

a *Refer to Air Conditioning sections for more information regarding double pulley.*

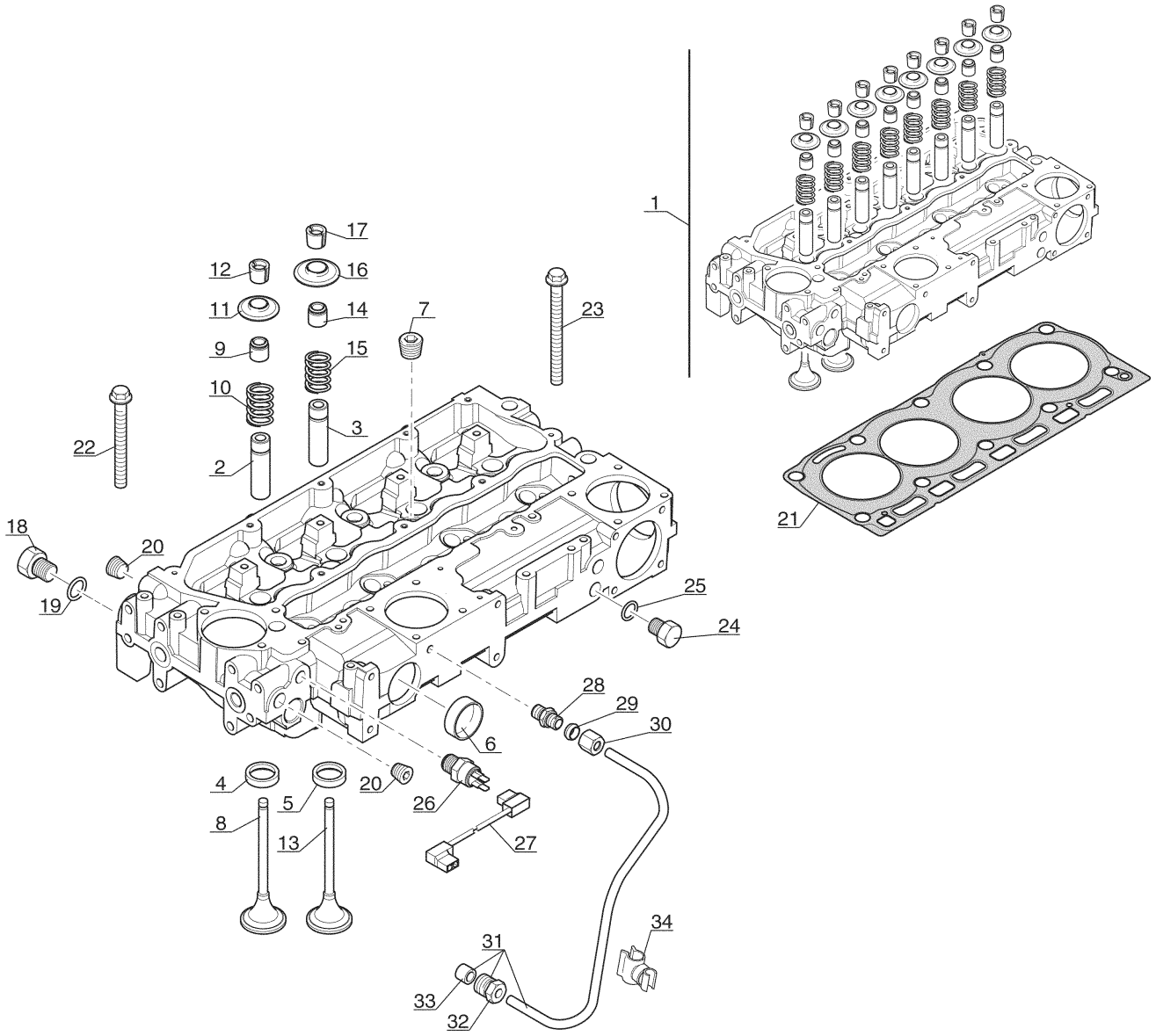
1
17
12
16
11
14
7
23
9
15
10
3
22
2
18
20
19
25
24
28
29
30
6
4
5
20
26
8
13
27
34
31
33
32
21

AP 1492

Ref. No.	Part No.	Description	Qty. Req.
01	217872	Complete Cylinder Head	1
02	219406	Guide	4
03	219406	Guide	4
04	219743	Bushing	4
05	219744	Bushing	4
06	219105	Plug	2
07	218327	Plug	4
08	219745	Intake valve	4
09	216911	Seal	4
10	217866	Spring	4
11	217867	Cap	4
12	219407	Cotter	8
13	219749	Exhaust valve	4
14	215179	Seal, Exhaust Valve (Brown)	4
15	217866	Spring	4
16	217867	Cap	4
17	219407	Cotter	8
18	219750	Plug	1
19	219751	O-ring	1
20	218331	Plug	2
21	219752	Cylinder head gasket	1
22	219753	Bolt	7
23	219754	Bolt	3
24	219755	Plug	1
25	219756	O-ring	1
26	217820	Water temperature sensor	1
27	217895	Wire Harness	1
28	217825	Adapter	1
29	217826	Compression Sleeve	1
30	217827	Nut	1
31	217894	Tube	1
32	217853	Nut	1
33	217830	Compression Sleeve	1
34	106428	Flange	1

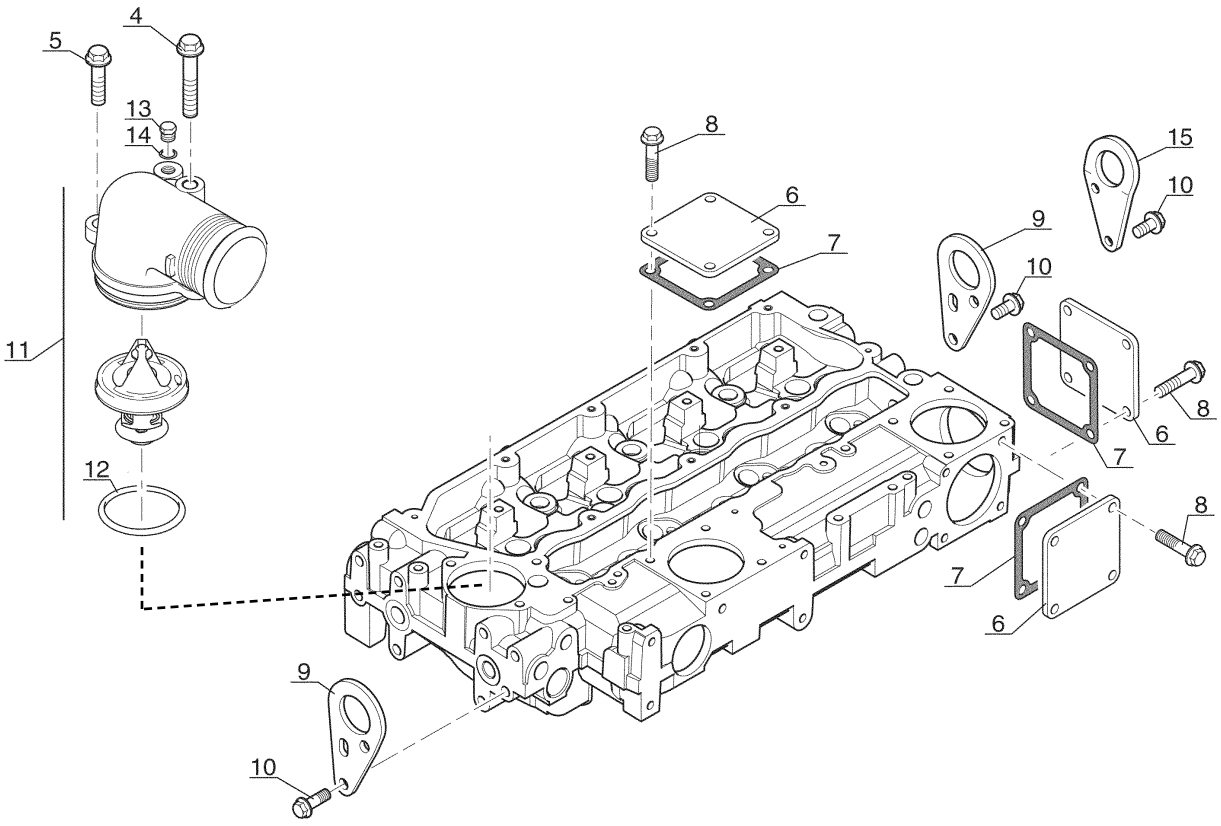

AP 1498

Ref. No.	Part No.	Description	Qty. Req.
04	219127	Bolt	1
05	219090	Bolt	1
06	219095	Plate	3
07	219079	Gasket	3
08	218268	Bolt	12
09	219809	Lug	2
10	219085	Bolt	4
11	219806	Coolant Outlet Assembly	1
12	215848	O-ring	1
13	215847	Plug	1
14	215846	O-ring	1
15	215845	Lug	1

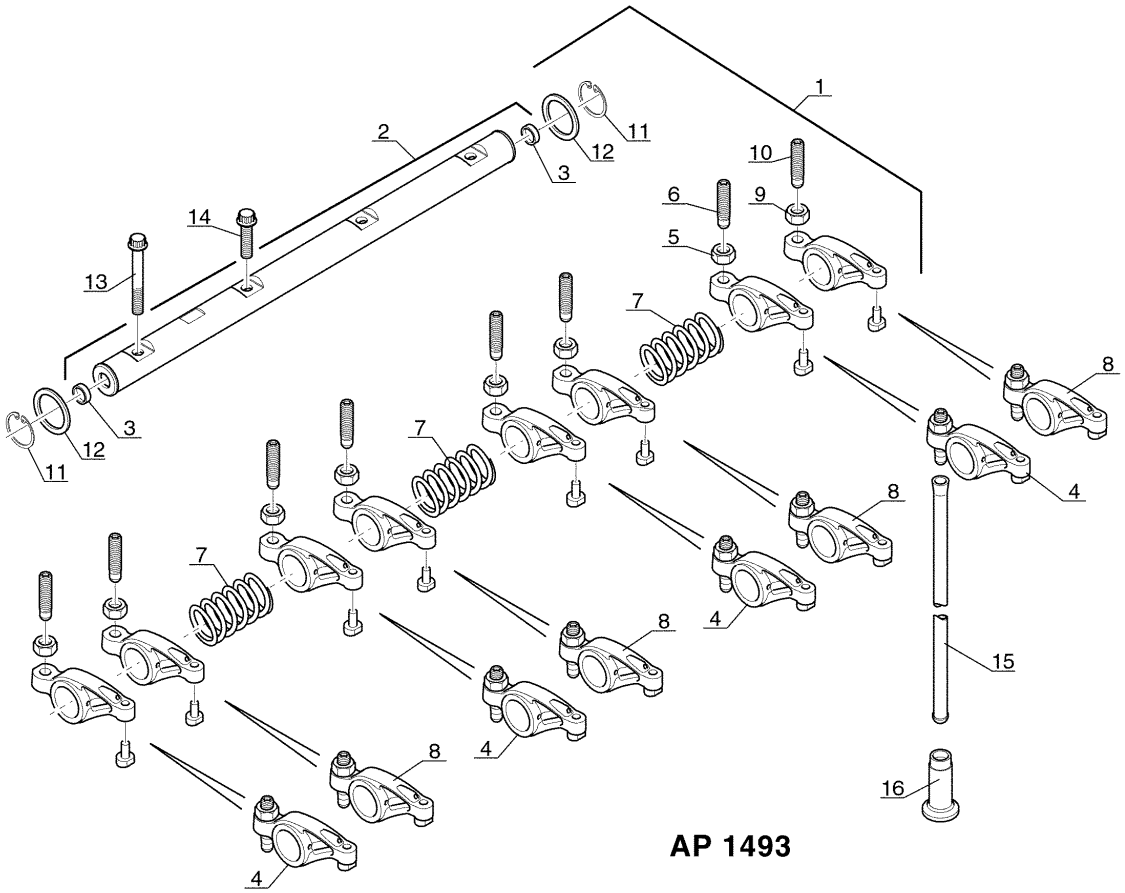
1
2
3
4
5
6
7
8
9
10
11
12
13
14
15
16
AP 1493

Ref. No.	Part No.	Description	Qty. Req.
01	219759	Rocker Lever Shaft	1
02	219760	Shaft	1
03	219761	Plug	2
04	219764	Rocker lever	4
05	218326	Nut	1
06	218328	Bolt	1
07	219763	Spring	3
08	219762	Rocker lever	4
09	218326	Nut	1
10	218328	Bolt	1
11	219765	Snap ring	2
12	219766	Washer	2
13	219767	Bolt	1
14	219768	Bolt	3
15	218333	Rod	8
16	218332	Valve tappet	8

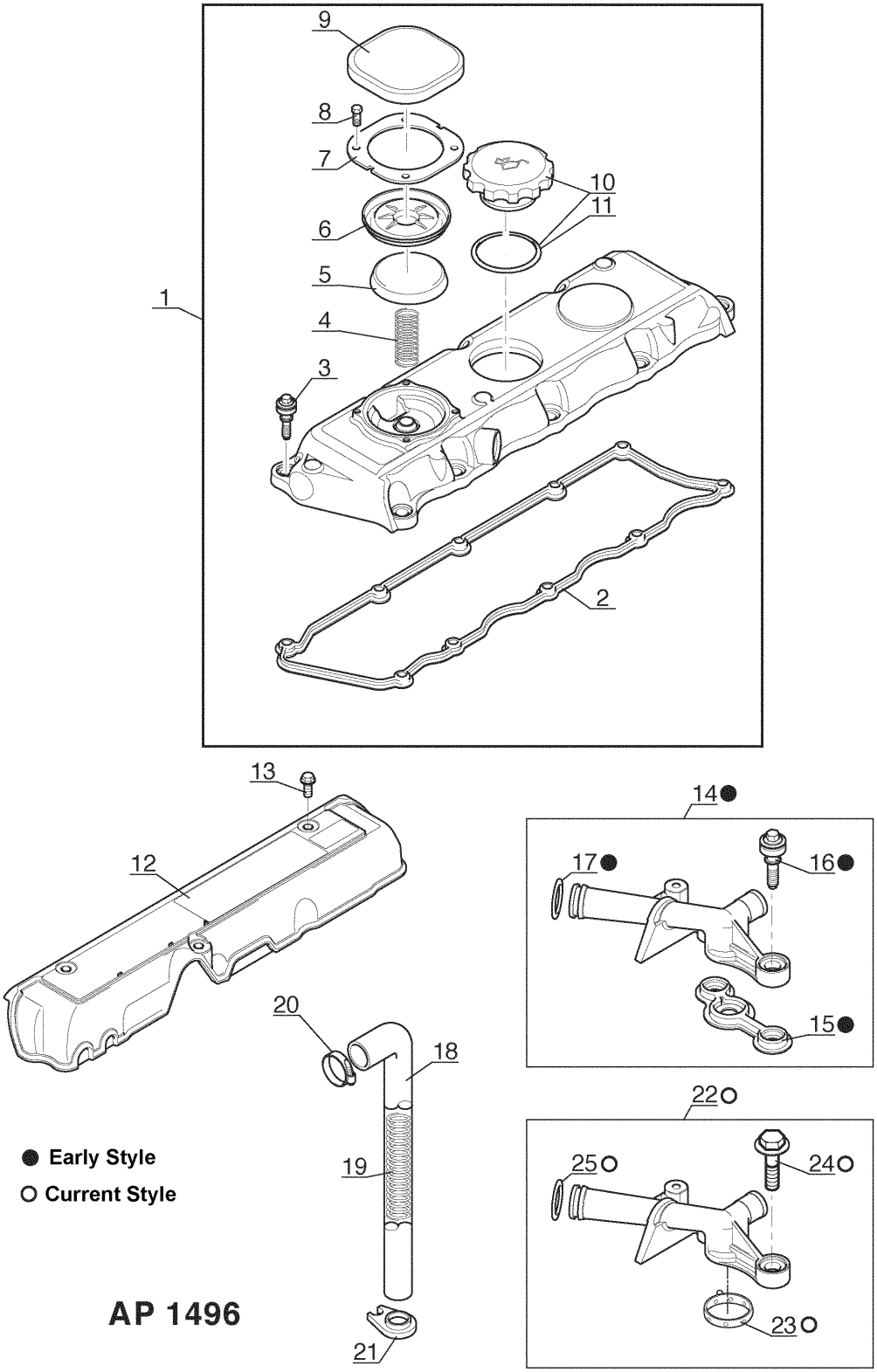
9
8
7
10
11
6
5
1
4
3
2
13
12
14●
17●
16●
15●
20
18
19
21
22○
25○
24○
23○
● Early Style
○ Current Style
AP 1496

Ref. No.	Part No.	Description	Qty. Req.
01	219785	Complete Valve Cover	1
02	219991	Seal	1
03	219787	Bolt	10
04	219788	Spring	1
05	219789	Plug	1
06	219790	Diaphragm	1
07	219791	Fastening plate	1
08	219792	Bolt	4
09	219793	Cover	1
10	219190	Valve Cover Cap	1
11	219711	O-ring	1
12	219794	Cover	1
13	219094	Bolt	3
14[a]	217874	Air breather	1
15[a]	219796	Seal	1
16[a]	219787	Bolt	2
17[a]	219797	O-ring	1
18	217875	Hose	1
19	217859	Spring	1
20	217855	Clamp	1
21	217852	Bracket	1
22[b]	215172	Air Breather	1
23[b]	215171	Seal, Air Breather	1
24[b]	217858	Bolt	2
25[b]	219797	O-ring	1

a *Early Style*
b *Current Style*

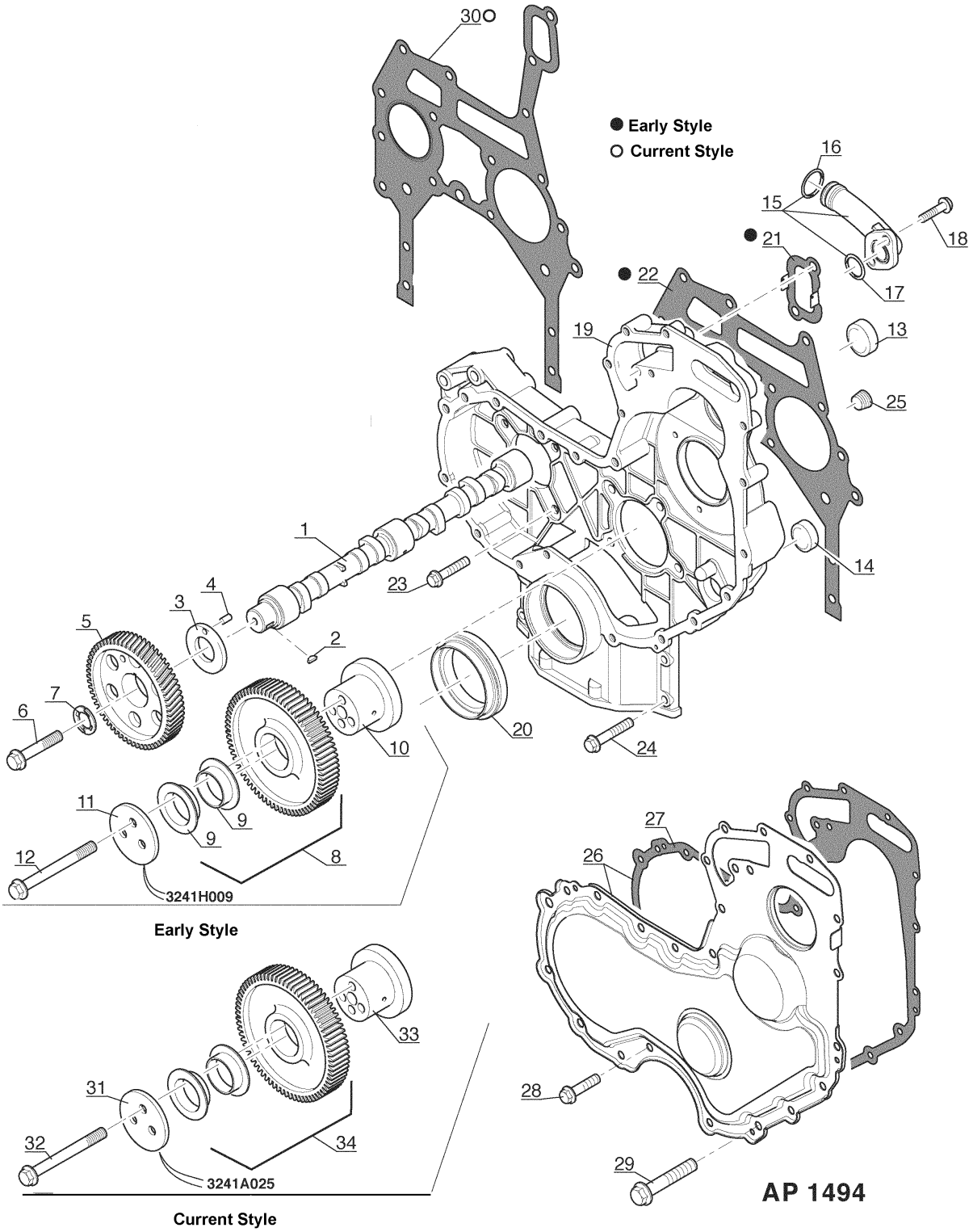
30
● Early Style
○ Current Style
16
15
18
● 21
17
● 22
19
13
25
1
14
23
4
3
5
2
7
6
20
10
24
11
9
9
12
8
3241H009
Early Style
27
26
28
29
AP 1494
33
31
32
34
3241A025
Current Style

Ref. No.	Part No.	Description	Qty. Req.
01	216894	Camshaft	1
02	218325	Key	1
03	219093	Washer	1
04	218330	Pin	1
05	219779	Gear	1
06	219073	Bolt	1
07	219875	Washer	1
08	219874	Gear	1
09	218323	Bushing	2
10	218335	Hub	1
11	218329	Plate	1
12	219072	Bolt	3
13	219770	Plug	1
14	219771	Plug	1
15	219772	Adapter	1
16	219773	O-ring	1
17	219774	O-ring	1
18	218268	Bolt	2
19	219775	Housing	1
20	215184	Seal	1
21	219777	Gasket	1
22	215183	Gasket	1
23	218268	Bolt	8
24	219072	Bolt	4
25	218331	Plug	1
26	216366	Housing	1
27	219881	Gasket	1
28	219103	Bolt	10
29	219127	Bolt	5
30	215183	Gasket, Timing Cover	1
31	215182	Plate, Retainer	1
32	215181	Bolt, Retainer	3
33	215180	Hub, Idler Gear	1
34	219874	Gear	1

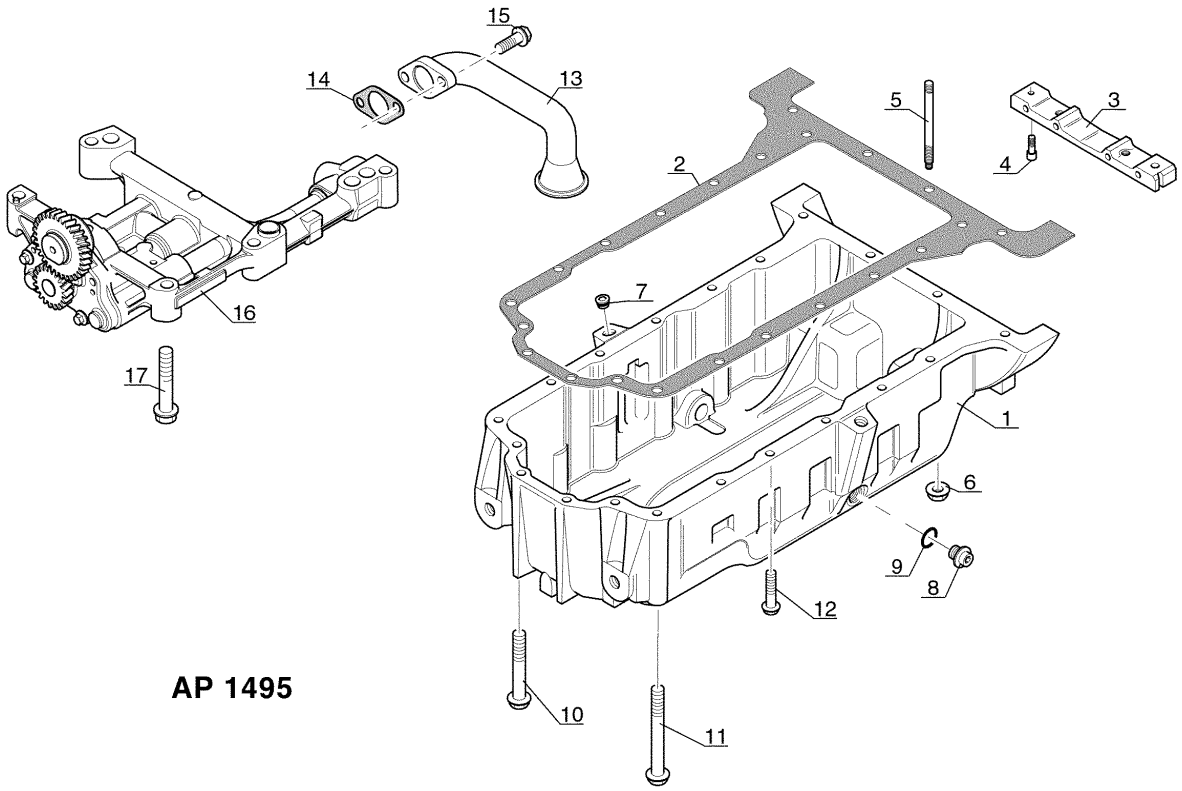

AP 1495

Ref. No.	Part No.	Description	Qty. Req.
01	219780	Oil Sump/Pan	1
02	219781	Gasket	1
03	219782	Bridge piece	1
04	219100	Bolt	2
05	219386	Stud-bolt	2
06	219084	Nut	2
07	216362	Plug	1
08	219076	Plug	2
09	219082	O-ring	2
10	219189	Bolt	5
11	219188	Bolt	1
12	219104	Bolt	12
13	219783	Pipe	1
14	219141	Seal	1
15	219090	Bolt	2
16	217873	Oil pump	1
17	219091	Bolt	1

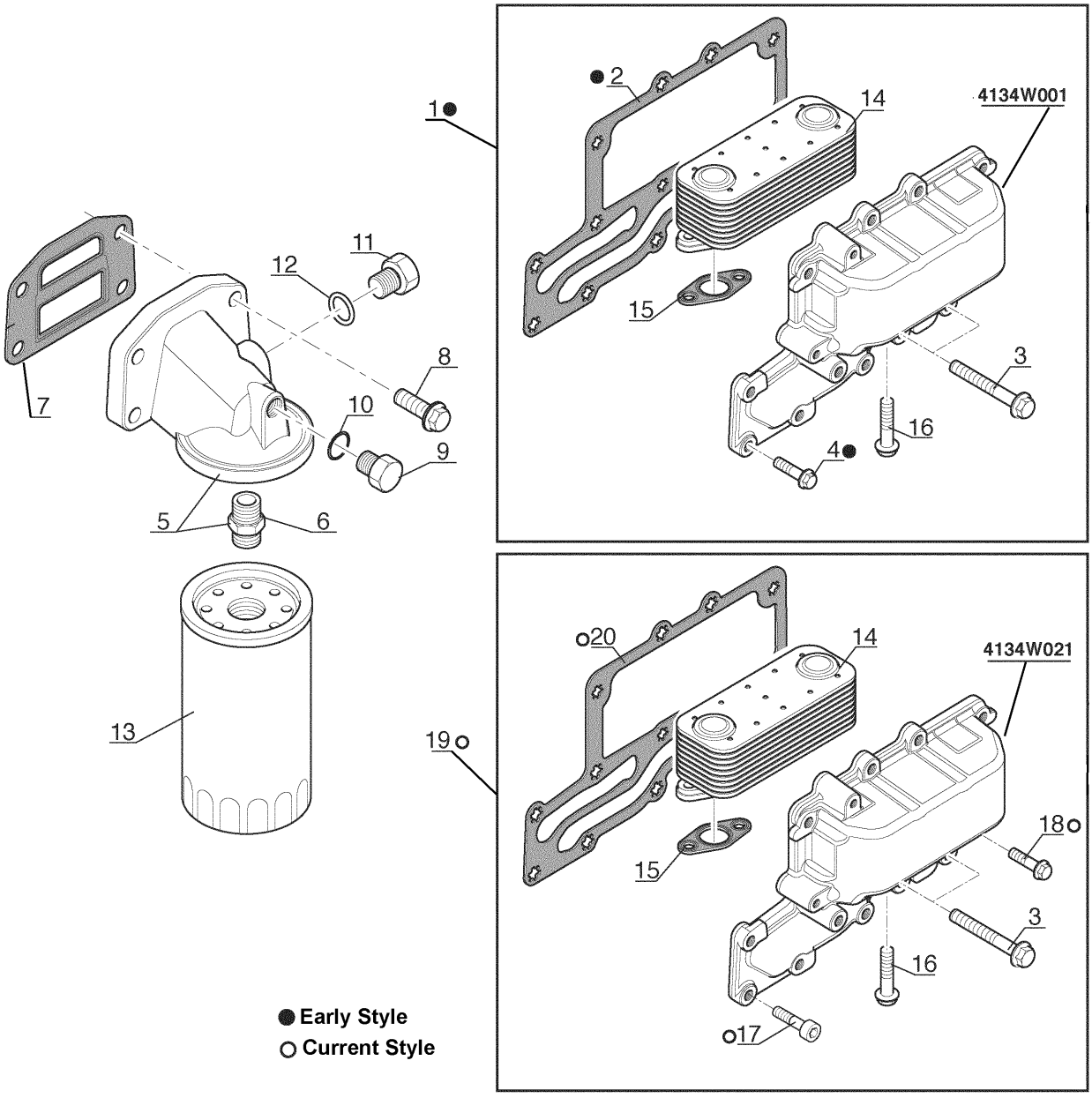
1●
●2
14
4134W001
15
3
16
4●
11
12
8
7
10
9
5
6
13
19○
○20
14
4134W021
18○
15
3
16
○17
● Early Style
○ Current Style
AP 1497

Ref. No.	Part No.	Description	Qty. Req.
01[a]	217876	Oil Cooler, Complete	1
02[a]	219799	Gasket	1
03	217854	Bolt, M8-60	3
04[a]	219090	Bolt, M8-25	10
05	216351	Filter head	1
06	219191	Adapter	1
07	219801	Gasket	1
08	219072	Bolt	4
09	219802	Plug	1
10	219803	O-ring	1
11	219804	Plug	1
12	219805	O-ring	1
13	219975	Oil Filter engine	1
14	217877	Oil Cooler	1
15	217878	Seal	2
16	217849	Bolt, M8-35	4
17[b]	218321	Bolt, Socket Head	2
18[b]	219090	Bolt, M8-25	8
19[b]	215173	Oil Cooler, Complete	1
20[b]	219799	Gasket	1

a *Early Style; refer to housing stamped 4134W001.*

b *Current Style; refer to housing stamped 4134W021.*

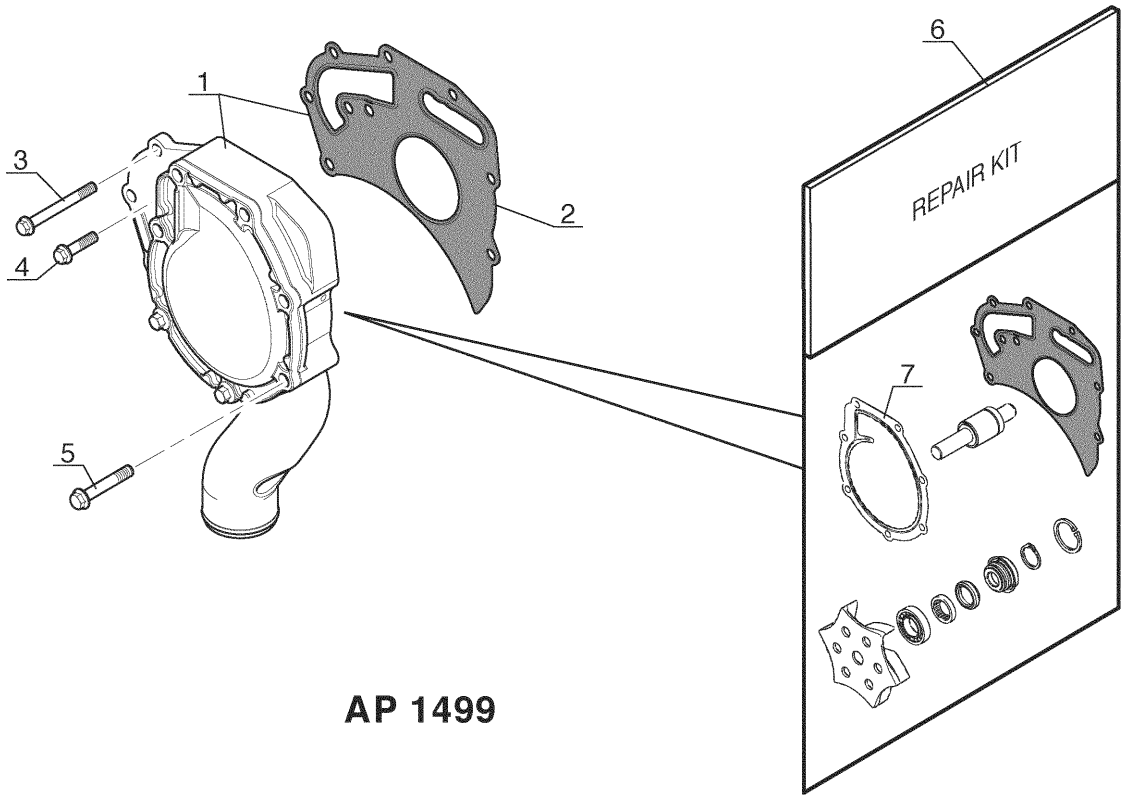

AP 1499

Ref. No.	Part No.	Description	Qty. Req.
01	219810	Water Pump	1
02	219811	Gasket	1
03	219125	Bolt, M8-75	2
04	219089	Bolt, M8-30	2
05	219127	Bolt, M8-65	5
06	219812	Repair Kit	1
07	215169	Seal	1

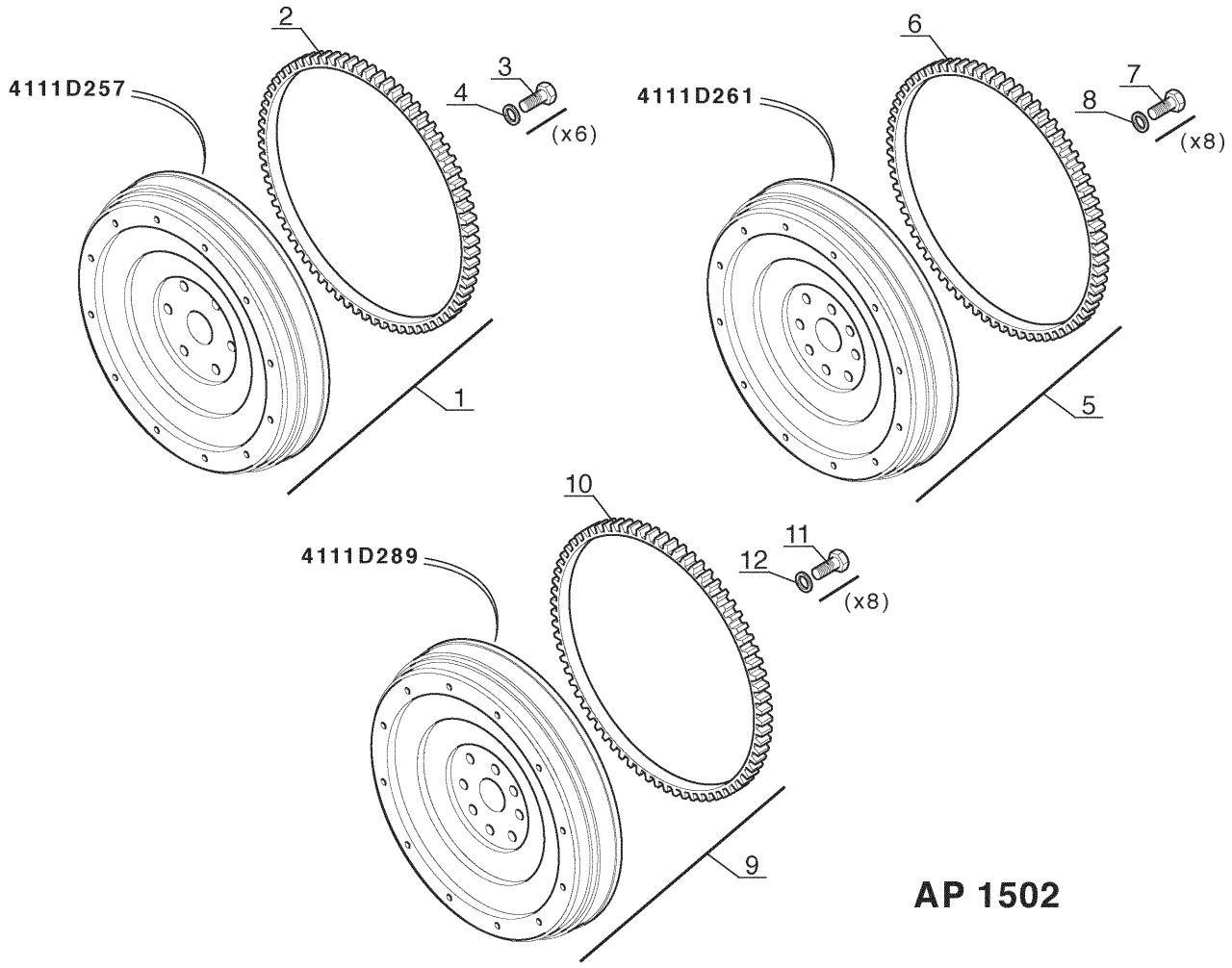

Ref. No.	Part No.	Description	Qty. Req.
01[ac]	219713	Flywheel *(includes item #2)*	1
02[a]	218324	Gear	1
03	219074	Bolt, 1/2x38 mm	6
04	219075	Washer	6
05[bc]	215844	Flywheel *(includes item #6)*	1
06[b]	218324	Gear	1
07	219074	Bolt, 1/2x38 mm	8
08	219075	Washer	8
09[bc]	215167	Flywheel	1
10[b]	218324	Gear	1
11	219074	Bolt, 1/2x38 mm	8
12	219075	Washer	8

a *Units requiring 6 bolts to mount to crankshaft*
b *Units requiring 8 bolts to mount to crankshaft*
c *Refer to casting number on flywheel when ordering a replacement.*

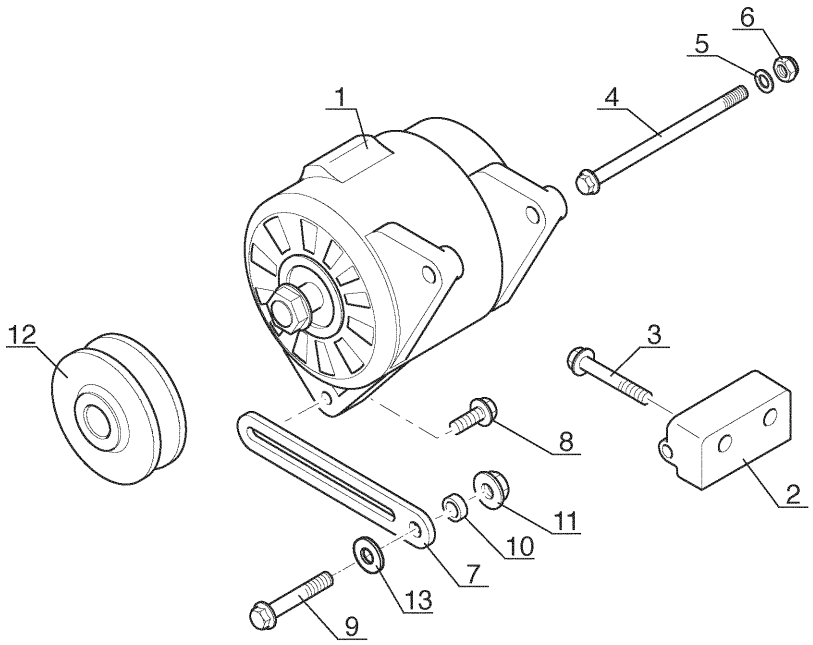

AP 1501

Ref. No.	Part No.	Description	Qty. Req.
01	219993	Alternator	1
02	219816	Bracket	1
03	219817	Bolt	2
04	219188	Bolt	1
05	218273	Washer	1
06	219169	Nut	1
07	219818	Lever	1
08	219090	Bolt, M8-25	1
09	219425	Bolt, M10-70	1
10	218272	Spacer	1
11	219081	Nut	1
12	219820	Pulley	1
13	215168	Washer	1

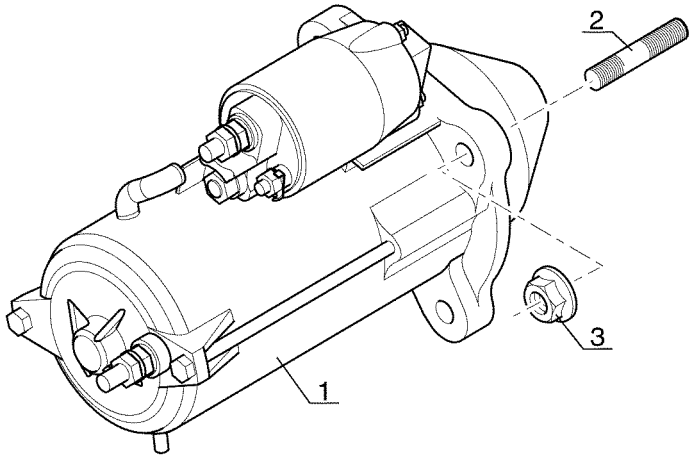

AP 1503

Ref. No.	Part No.	Description	Qty. Req.	Ref. No.	Part No.	Description	Qty. Req.
01	219819	Starter	1	03	219081	Nut	3
02	219128	Stud-bolt	3				

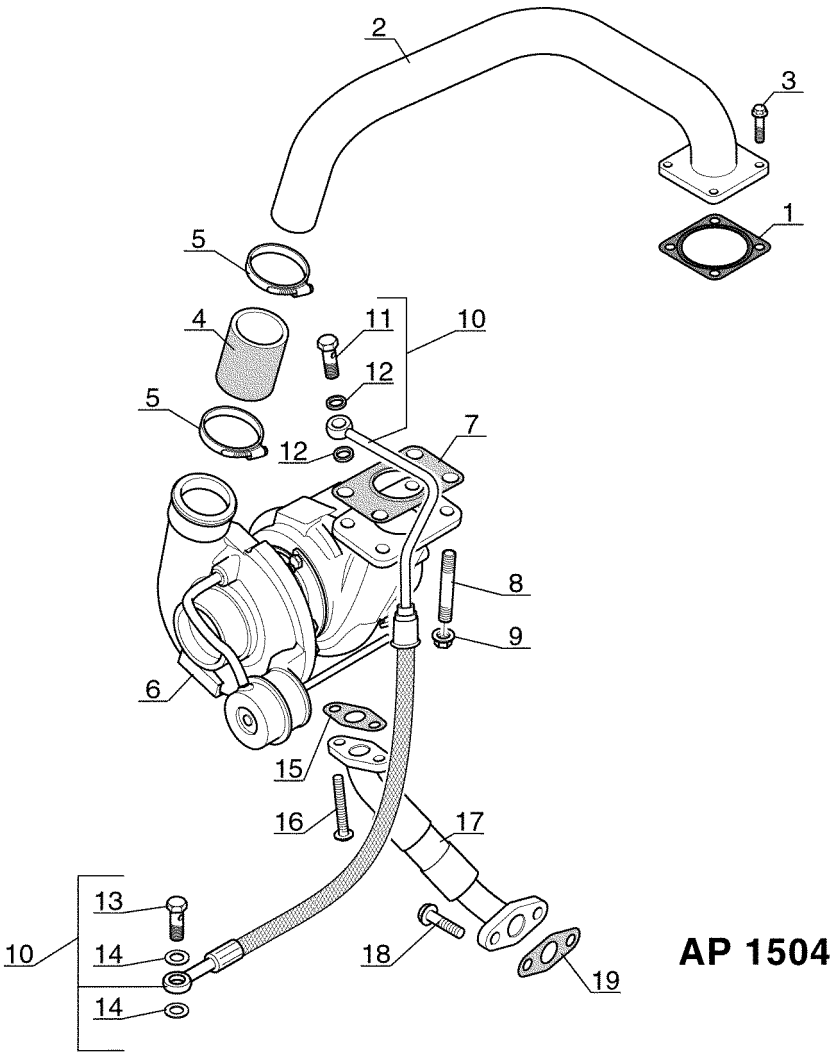
2
3
1
5
4
11
10
12
5
12
7
8
9
6
15
16
17
13
10
14
14
18
19
AP 1504

Ref. No.	Part No.	Description	Qty. Req.
01	217881	Gasket	1
02	217880	Tube	1
03	218268	Bolt	4
04	215843	Hose	1
05	217882	Clamp	2
06	217884	Turbocharger	1
07	217860	Gasket	1
08	217885	Stud-bolt	4
09	219081	Nut	4
10	217887	Hose	1
11	217889	Hollow bolt	1
12	217888	Washer	2
13	217889	Hollow bolt	1
14	217888	Washer	2
15	217890	Gasket	1
16	216876	Bolt	2
17	217891	Hose	1
18	218268	Bolt	2
19	217893	Gasket	1

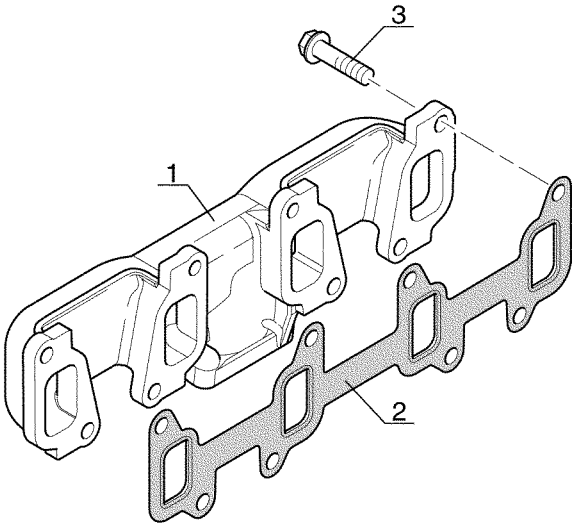

AP 1500

Ref. No.	Part No.	Description	Qty. Req.	Ref. No.	Part No.	Description	Qty. Req.
01	217879	Exhaust Manifold	1	03	219644	Bolt, M10-30	8
02	219814	Gasket	1				

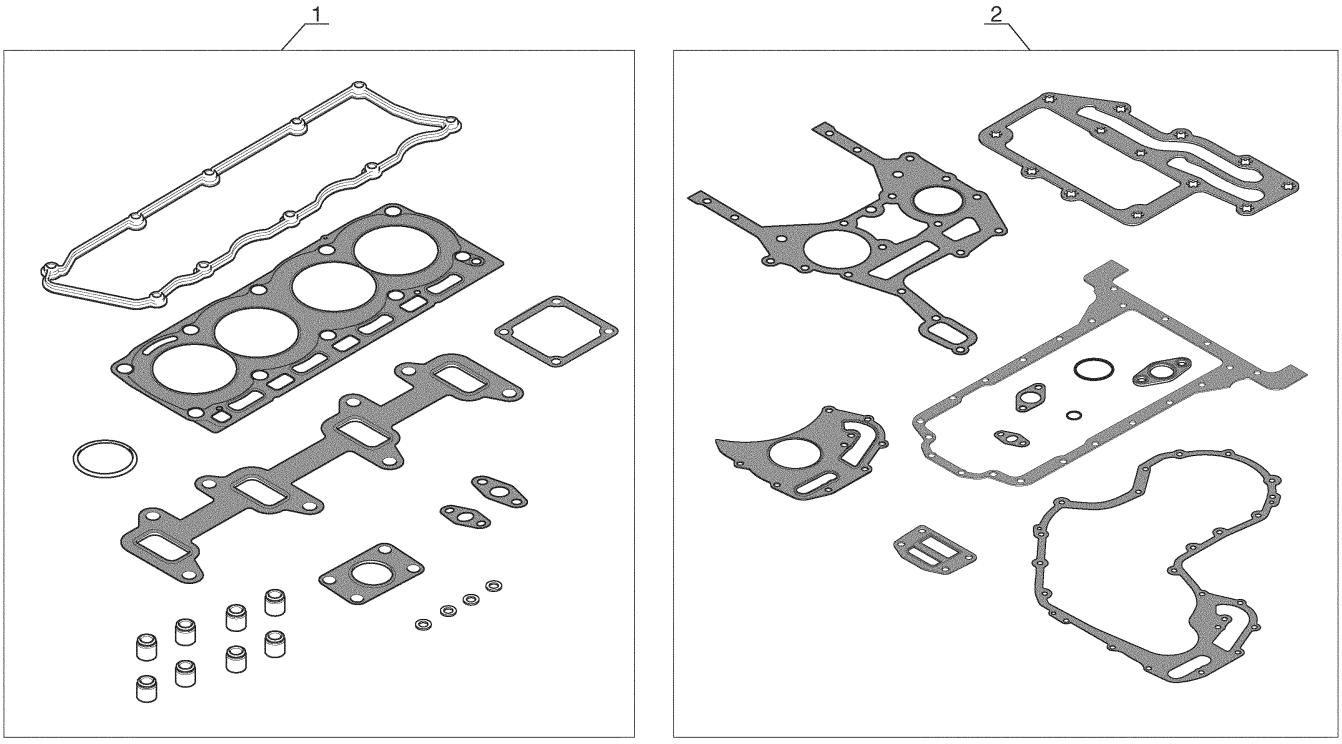

AP 1505

Ref. No.	Part No.	Description	Qty. Req.	Ref. No.	Part No.	Description	Qty. Req.
01	219999	Seal kit *(top service kit)*	1	02	219997	Seal kit *(bottom service kit)*	1

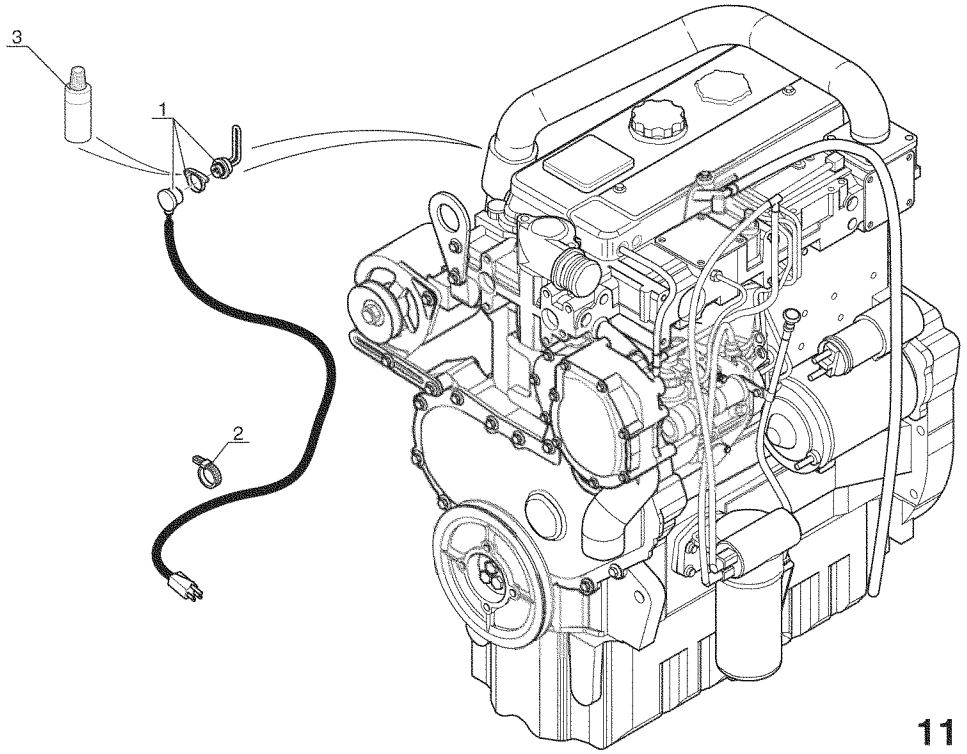

11 CB 597

Ref. No.	Part No.	Description	Qty. Req.	Ref. No.	Part No.	Description	Qty. Req.
01	217813	Heater/ Engine Block	1	03	NSS	Sealant/ Bottle	1
02	215851	Clamp	AR				

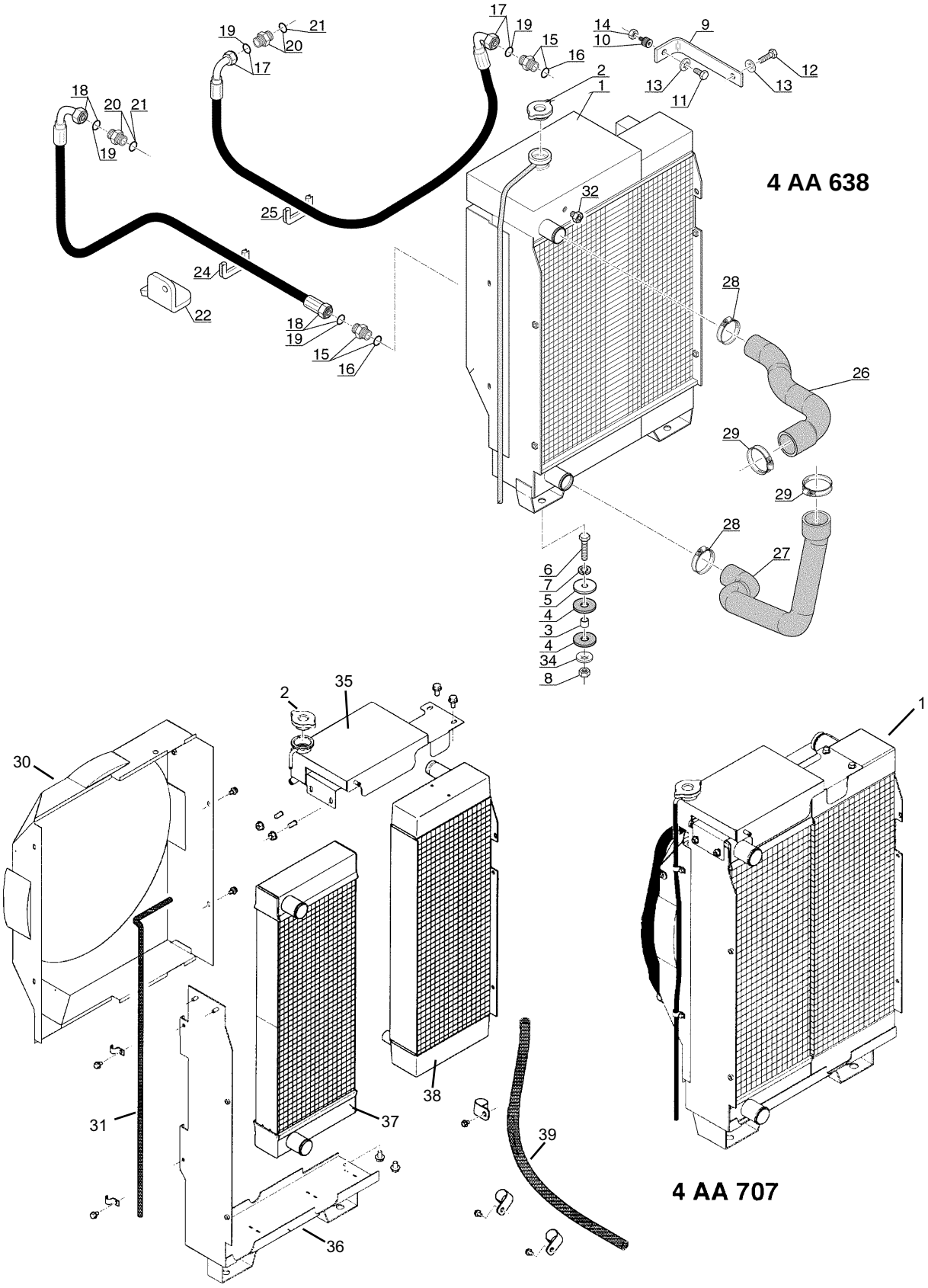
4 AA 638
4 AA 707

Radiator and Transmission Cooler

Ref. No.	Part No.	Description	Qty. Req.
01	215023	Radiator Assembly	1
		(Includes items 2, 30, 31, 35-39)	
02	215020	Radiator Cap	1
03	218432	Spacer	2
04	219908	Rubber washer	4
05	219062	Washer	2
06	219030	Bolt	2
07	219050	Washer	2
08	218319	Nut	2
09	218887	Bracket	1
10	219910	Shock absorber	1
11	219184	Bolt	1
12	219055	Bolt	1
13	219867	Washer	2
14	219616	Nut	1
15	218504	Adapter	2
17	218978	Hose	1
18	219970	Hose	1
20	218503	Adapter	2
21	219152	O-ring	1
22	218689	Guide	1
24	215419	Weatherstrip/Seal	1
25	215419	Seal	1
26	219965	Upper hose	1
27	219019	Lower hose	1
28	218500	Clamp	2
29	218470	Clamp	2
30	215022	Shroud	1
31	215019	Hose	1
32	219689	Level plug *(sight glass)*	1
	215426	Copper seal	
34	218499	Washer	2
35	215021	Radiator Tank, Upper	1
36	215015	Radiator Mount Bracket	1
37	215018	Coolant Section, Radiator	1
38	215017	Oil Cooler Section, Radiator	1
39	215016	Hose	1

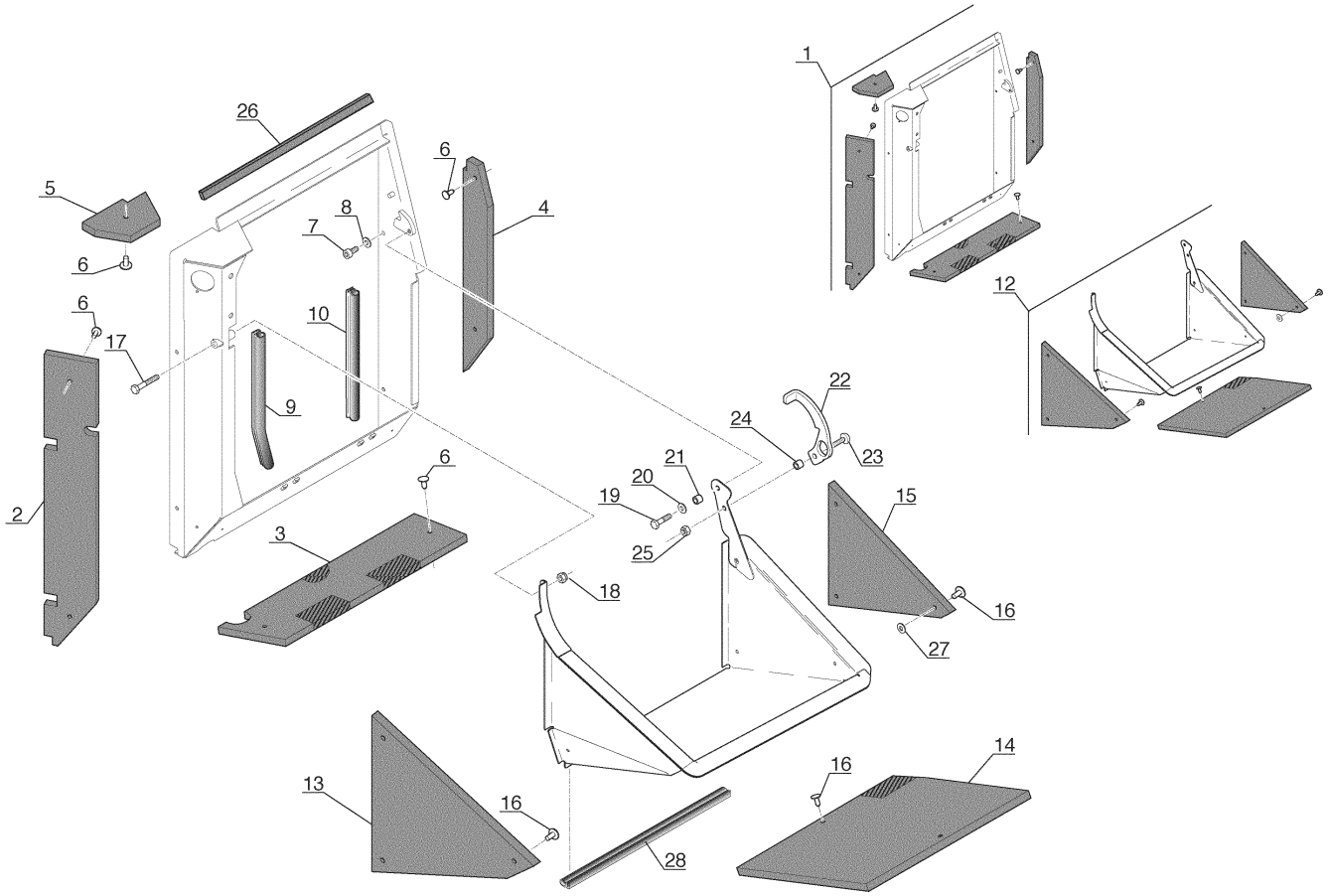

4 AA 635

Radiator Shroud - Sound Suppression

Ref. No.	Part No.	Description	Qty. Req.
01	218969	Shroud Foam Assembly	1
02	218973	Rear Sound-proofing foam	1
03	218972	Lower Sound-proofing foam	1
04	218971	Front Sound-proofing foam	1
05	218970	Upper rear Sound-proofing foam	1
06	218897	Clip	7
07	219270	Bolt	4
08	218510	Washer	4
09	218944	Weatherstrip	1
10	218944	Weatherstrip	1
12	218968	Lower Shroud Assembly	1
13	218891	Rear Sound-proofing foam	1
14	218967	Lower Sound-proofing foam	1
15	218890	Front Sound-proofing foam	1
16	218897	Clip	8
17	219619	Bolt	1
18	219169	Nut	1
19	219184	Bolt	1
20	218510	Washer	1
21	218976	Spacer	2
22	218977	Lug	1
23	218491	Bolt	1
24	218976	Spacer	1
25	219169	Nut	1
26	218975	Weatherstrip	1
27	218439	Washer	3
28	217358	Weatherstrip	1

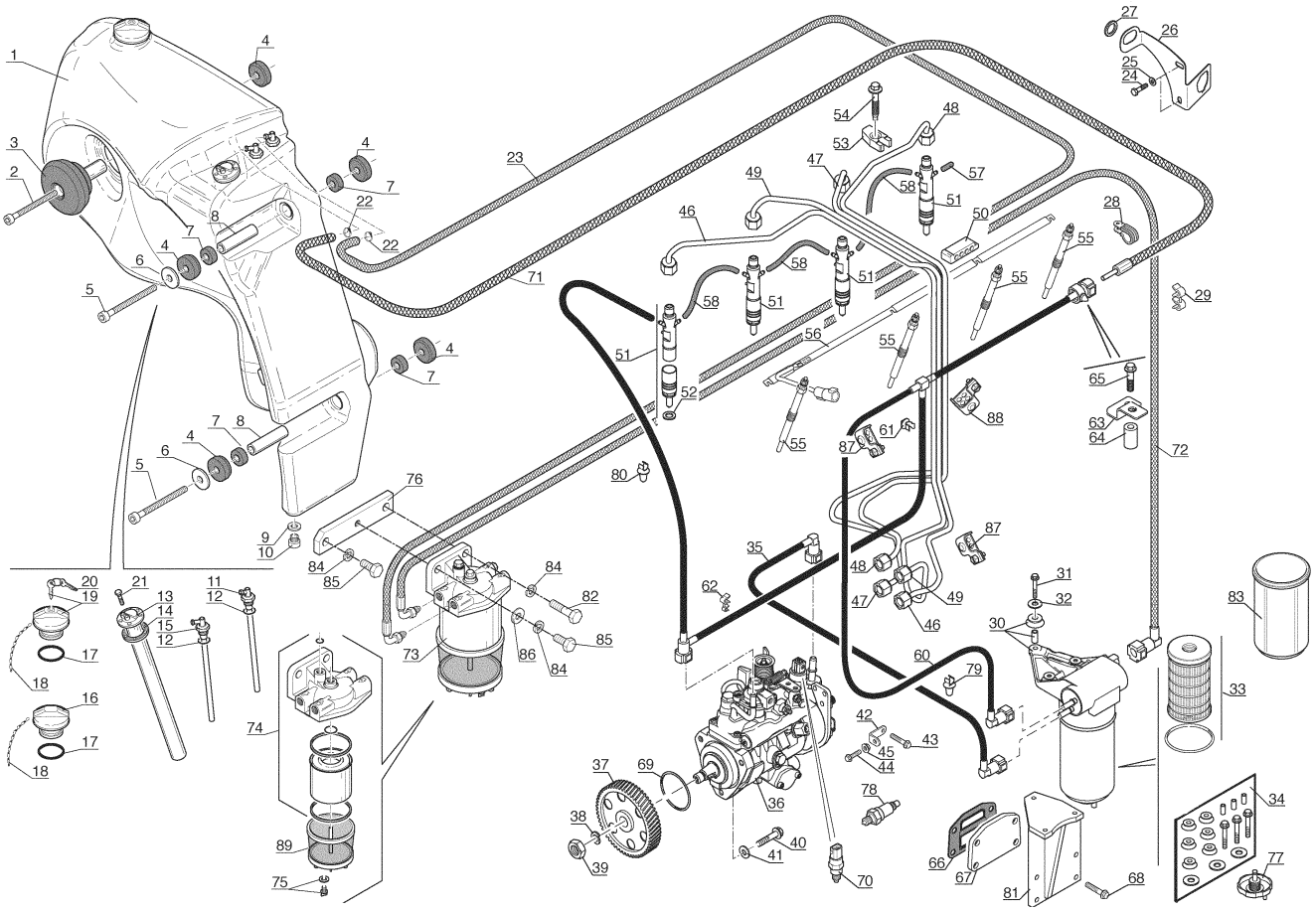

4 AC 231

Ref. No.	Part No.	Description	Qty. Req.
01	218571	Fuel tank	1
02	218673	Bolt	1
03	218626	Shock absorber	1
04	215346	Shock absorber	8
05	219630	Bolt	2
06	219609	Washer	2
07	218588	Shock absorber	4
08	NSS	Spacer	2
09	218706	Seal	1
10	218705	Drain plug	1
11	218702	Pipe	1
12	218704	O-ring	2
13	217837	Fuel gauge	1
14	218700	Gasket	1
15	218703	Return pipe	1
16	218697	Filling plug	1
17	215356	O-ring	1
18	218698	Chain	1
19	218694	Filling plug	1
20	NSS	Key	1
21	218701	Bolt	5
22	219145	Clamp	2
23	215367	Fuel Line *(2000 mm lg)*	1
24	219699	Bolt	2
25	219028	Washer	2
26	218929	Bracket	1
27	218848	Cable grommet	1
28	218817	Clamp	1
29	218934	Clamp	1
30	219821	Complete fuel filter	1
31	219140	Bolt	3
32	219823	Washer	3
33	184223	Filter cartridge	1
34	219824	Repair kit	1
35	215355	Hose	1
36	218238	Injection pump	1
37	218239	Gear	1
38	218116	Washer	1
39	218115	Nut	1
40	219090	Bolt	3
41	219827	Washer	3
42	219829	Bracket	1
43	219085	Bolt	1
44	218268	Bolt	1
45	219084	Nut	1
46	215354	Injection pipe *(cylinder Nr1)*	1
47	215352	Injection pipe *(cylinder Nr3)*	1
48	215351	Injection pipe *(cylinder Nr4)*	1
49	215353	Injection pipe *(cylinder Nr2)*	1
50	219086	Clamp	4
51	218244	Complete injector	4
52	219236	Washer	1
53[a]	NSS	Locking collar	4
54	219837	Bolt	4
55	219995	Heating plug	4
56	219839	Wire Harness	1
57	218248	Cap	1
58	218247	Hose	3
60	218249	Hose	1
61	219843	Clamp	1
62	106428	Flange	1
63	215937	Bracket	1
64	215934	Spacer	1
65	217028	Bolt	1
66	219081	Gasket	1
67	219878	Fastening plate	1
68	219072	Bolt	4
69	218146	O-ring	1
70	219986	Stop engine electrovalve	1
71	218932	Hose *(1340 mm long)*	1
72	215368	Hose *(800 mm long)*	1
73	215370	Fuel/Water Separator Assy	1
74	215350	Filter and housing *(no glass bowl)*	1
	189145	Water/Fuel Separator Filter *(only)*	1
75	215349	Bleeder *(water separator)*	1
76	215369	Bracket, fuel filter mount	1
77	215348	Bleeder *(only)* Fuel Filter	1
78	215463	Solenoid Valve	1
79	219843	Clamp	1
80	219843	Clamp	1
81	215935	Bracket	1
82	219868	Bolt, M10-35	1
83	217721	Canister *(includes item #77)*	1
84	219051	Washer, Lock M10	3
85	219613	Bolt, M10-25	2
86	219028	Washer, Flat M10	1
87	218934	Clamp	2
88	217724	Clamp	1
89	215347	Glass Bowl, water separator	1

a *Use (2) - 219837 Bolts and (1) - 217725 Locking collar.*

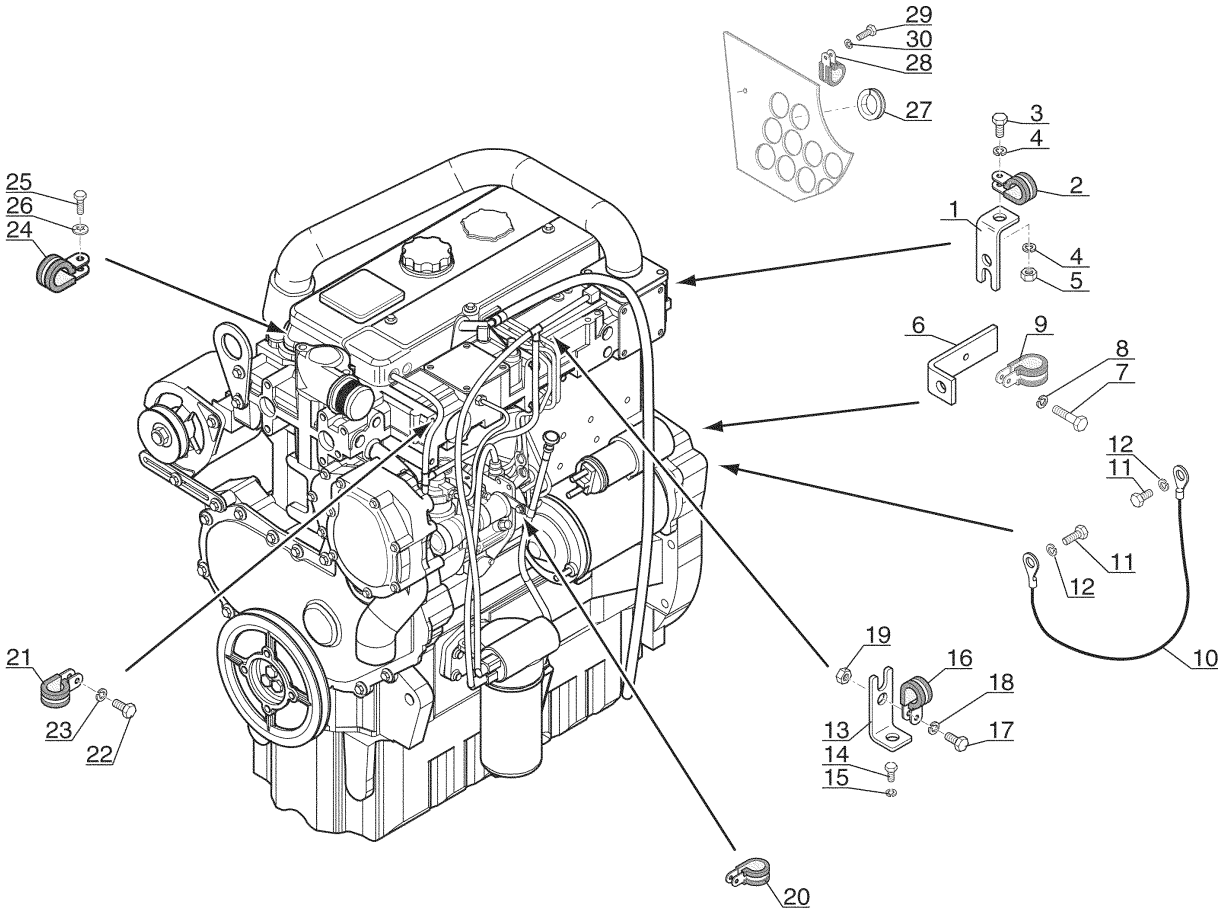
29
30
28
27
3
4
2
1
4
5
25
26
24
6
9
8
7
12
11
11
12
10
19
16
18
13
17
14
15
21
23
22
20

11 CF 23

Ref. No.	Part No.	Description	Qty. Req.	Ref. No.	Part No.	Description	Qty. Req.
01	218954	Clamp bracket	1	16	218817	Clamp	1
02	218817	Clamp	1	17	219610	Bolt	1
03	219610	Bolt	1	18	219054	Washer	1
04	219054	Washer	2	19	219616	Nut	1
05	219616	Nut	1	20	218816	Clamp	1
06	218768	Bracket	1	21	218817	Clamp	1
07	219610	Bolt	1	22	219610	Bolt	1
08	219054	Washer	1	23	219054	Washer	1
09	219934	Clamp	1	24	218816	Clamp	1
10	218997	Ground cable	1	25	219021	Bolt	1
11	219184	Bolt	2	26	218379	Washer	1
12	219054	Washer	2	27	215419	Weatherstrip	1
13	218954	Clamp bracket	1	28	219934	Clamp	1
14	219021	Bolt	1	29	219872	Bolt	1
15	219052	Washer	1	30	219054	Washer	1

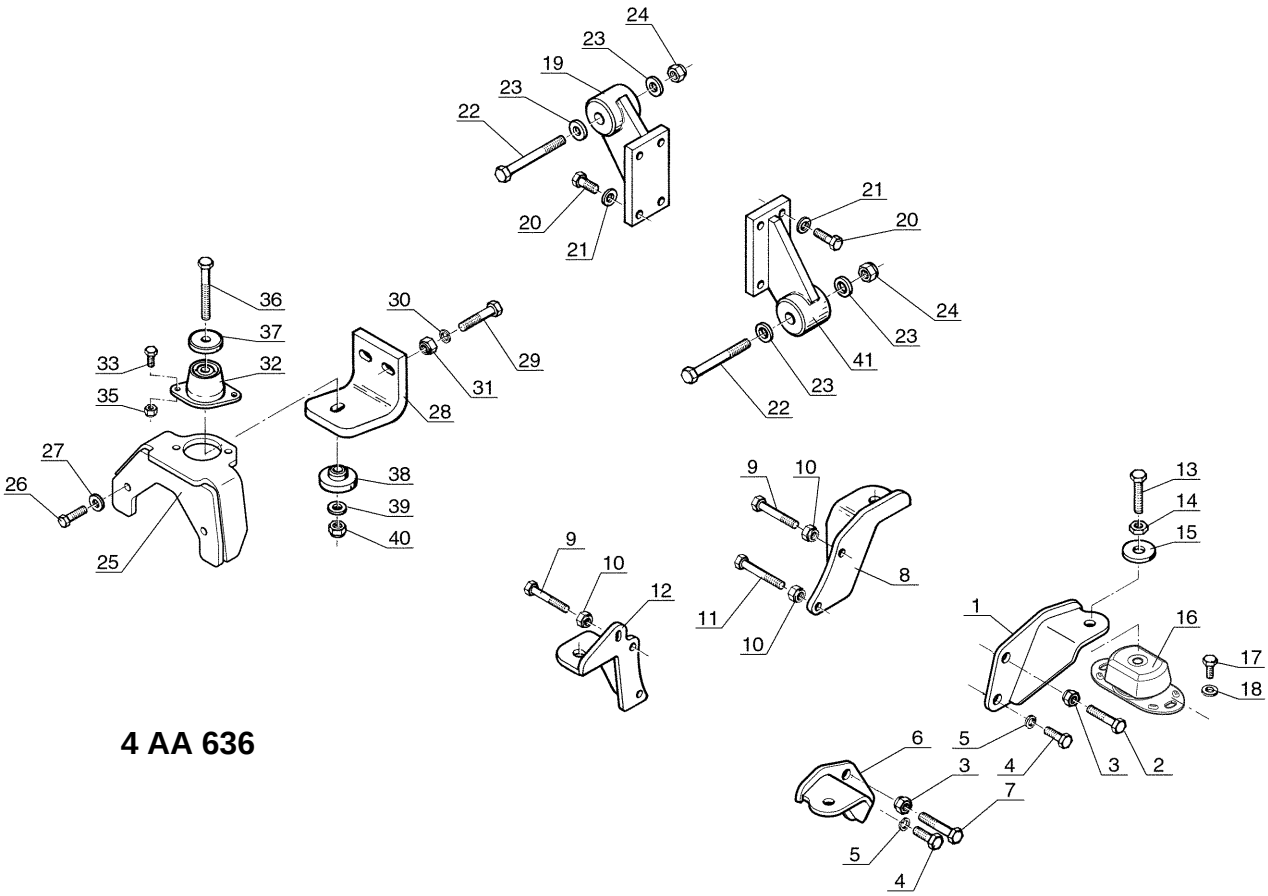
24
23
19
23
22
20
21
21
20
24
23
41
23
22
36
37
33
32
35
30
29
31
28
27
26
25
38
39
40
9
10
12
9
10
8
11
10
13
14
15
1
16
17
18
6
5
3
4
3
2
7
5
4

4 AA 636

Ref. No.	Part No.	Description	Qty. Req.
01	218980	R.H. front engine bracket	1
02	219629	Bolt	1
03	218376	Nut	2
04	219627	Bolt	2
05	219053	Washer	2
06	218979	R.H. rear engine bracket	1
07	219629	Bolt	1
08	218656	L.H. front engine bracket	1
09	219614	Bolt	3
10	219063	Nut	4
11	219048	Bolt	1
12	218657	Rear engine bracket	1
13	219851	Bolt	4
14	218417	Nut	4
15	219927	Washer	4
16	218924	Shock absorber	4
17	219869	Bolt	8
18	219919	Washer	8
19	218674	Gear box bracket	1
20	219623	Bolt	8
21	219050	Washer	8
22	218394	Bolt	2
23	218466	Washer	4
24	218376	Nut	2
25	218981	Angle return bracket	1
26	219870	Bolt	2
27	219919	Washer	2
28	218675	Bracket	1
29	219626	Bolt	2
30	219856	Washer	2
31	219063	Nut	2
32	219915	Shock absorber	1
33	219613	Bolt	2
35	219269	Nut	2
36	219863	Bolt	1
37	219916	Stop washer	1
38	218670	Centering washer	1
39	219856	Washer	1
40	219063	Nut	1
41	218674	Gear box bracket	1

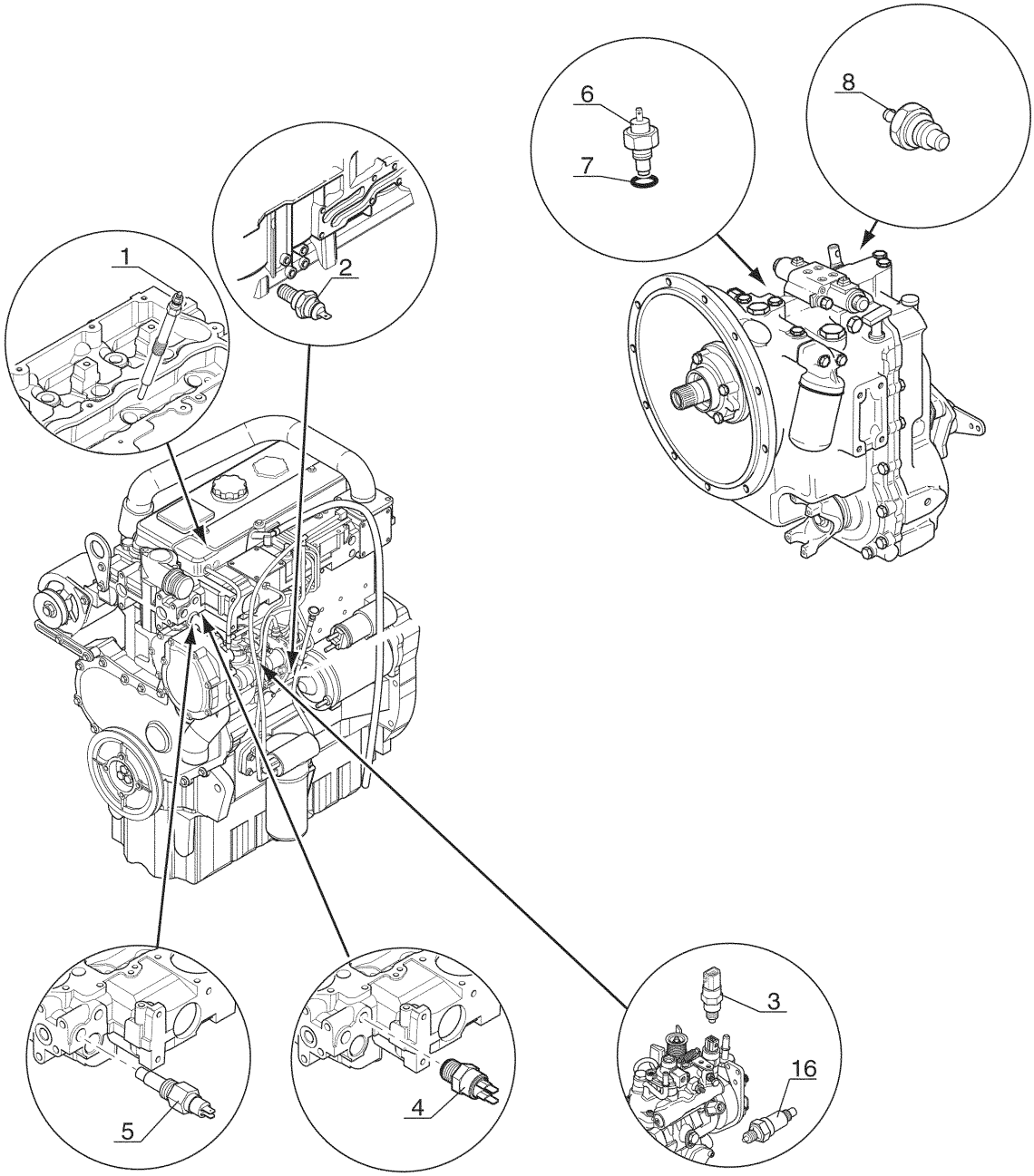

11 CD 137

Ref. No.	Part No.	Description	Qty. Req.
01	219995	Glow Plug	4
02	218262	Engine oil pressure switch	1
03	219986	Stop engine electrovalve	1
04	217820	Water temperature sensor	1
05	218937	Water temperature sensor	1
06	219262	Oil temperature sensor	1
07	217942	O-ring	1
08	217015	Transmission oil pressure switch	1
16	217821	Solenoid	1

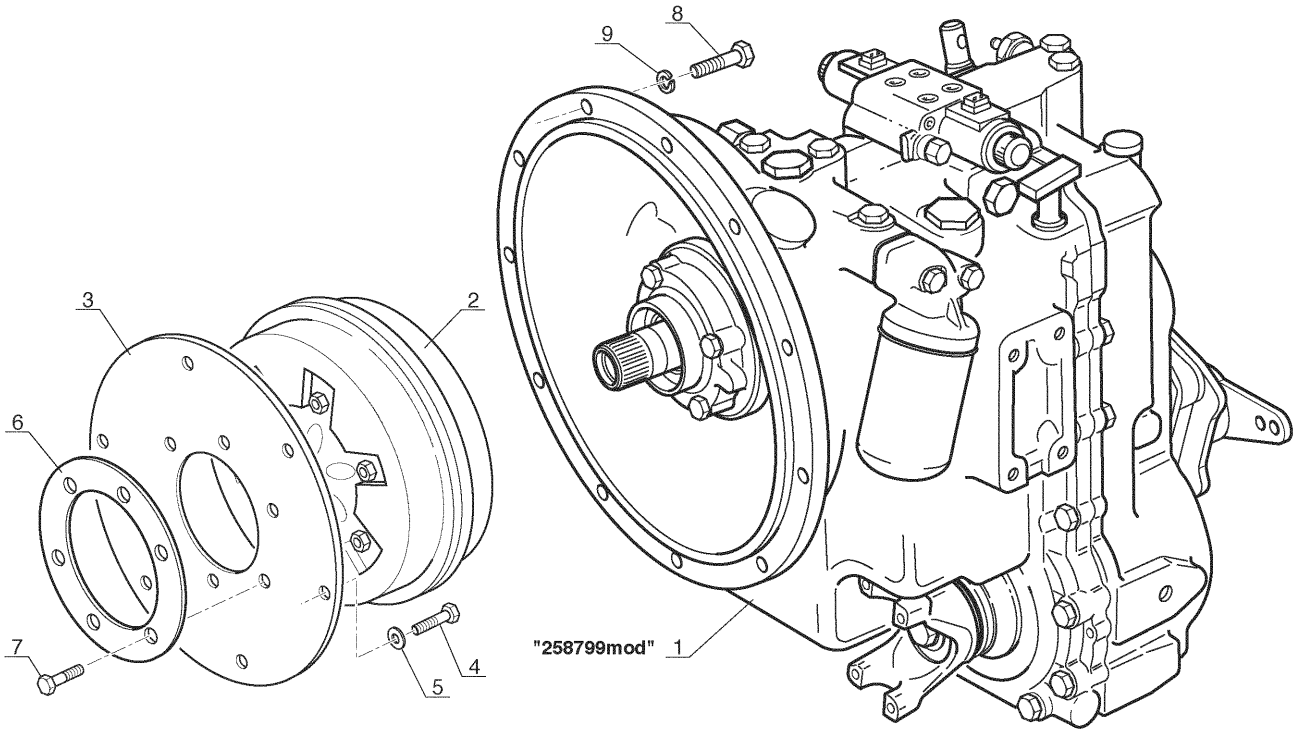

BP 236

Ref. No.	Part No.	Description	Qty. Req.
01	215159	Complete Transmission	1
02	218519	Converter	1
03	218520	Intermediate piece	1
04	218522	Bolt	6
05	218524	Washer	6
06	218521	Converter reinforcement plate	1
07	218523	Bolt	6
08	219904	Bolt	12
09	219905	Washer	12

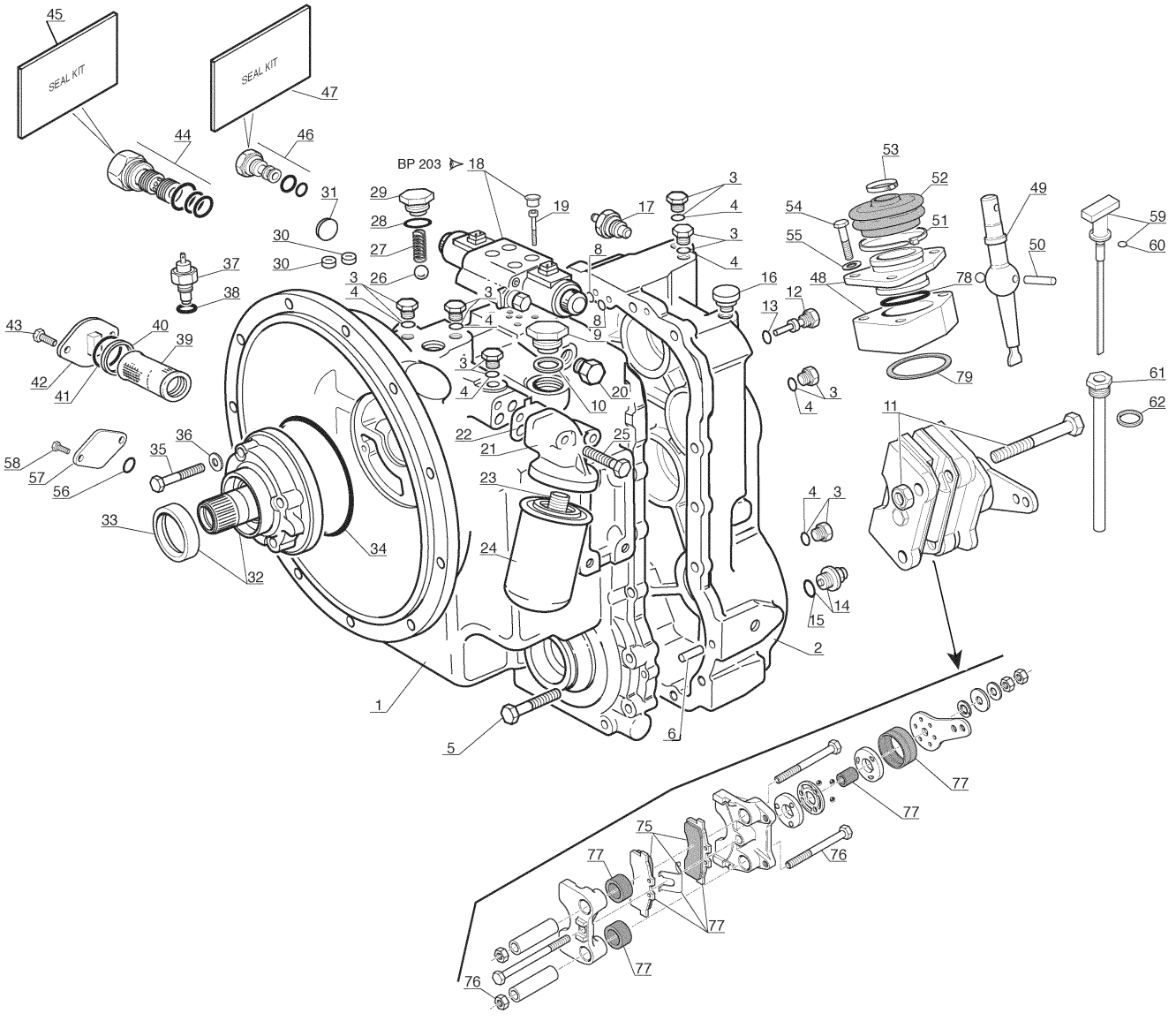
SEAL KIT
SEAL KIT
BP 203
BP 234

Ref. No.	Part No.	Description	Qty. Req.
01	219426	Transmission housing	1
02	219280	Transmission rear case	1
03	219223	Plug	11
04	217942	O-ring	11
05	219281	Bolt	4
06	218298	Stud-bolt	2
07	218301	Bolt	13
08	218125	O-ring	2
09	219201	Plug	1
10	219200	Seal	1
11	219427	Brake assy	1
12	219383	Plug	1
13	217942	O-ring	1
14	219077	Drain plug	1
15	219082	O-ring	1
16	218299	Air breather	1
17	217015	Transmission oil pressure switch	1
18	219648	Electrical control valve	1
19	219324	Bolt	4
20	219431	Plug	1
21	218276	Filter housing	1
22	218284	Gasket	1
23	215797	Adapter	1
24	219976	Oil filter transmission	1
25	218302	Bolt	2
26	219328	Ball	1
27	219286	Spring	1
28	218124	O-ring	1
29	219323	Plug	1
30	219320	Plug	2
31	219327	Plug	1
32	219384	Complete Pump	1
33	218296	Seal	1
34	218294	O-ring	1
35	219282	Bolt	4
36	218291	Washer	4
37	219262	Oil temperature sensor	1
38	217942	O-ring	1
39	218274	Suction strainer	1
40	219213	Washer	1
41	219214	O-ring	1
42	219078	Cover	1
43	218303	Bolt	2
44	219325	Valve (Pressure regulation)	1
45	219332	Seal kit	1
46	219321	Over pressure valve	1
47	219331	Seal kit	1
48	219333	Upper seat	1
49	219317	Gear lever foot	1
50	218295	Pin	1
51	219318	Clamp	1
52	218280	Dust cover	1
53	218347	Clamp	1
54	219282	Bolt	3
55	219283	Washer	3
56	219218	O-ring	1
57	219217	Plate	1
58	219219	Bolt	2
59	219433	Oil level	1
60	218336	O-ring	1
61	219432	Adapter	1
62	217909	O-ring	1
75	L99309	Kit *(brake lining and spring)*	1
76	219593	Kit *(bolt and nut)*	2
77	219594	Kit brake lining	1
78	219632	Gasket	1
79	219633	O-ring	1

-- ITEMS NOT SHOWN --

(Repair Kits)

70	218126	Pump kit	AR
		(Includes items 32, 34, 36.)	
71	218129	Small parts kit	AR
		(Includes items 3, 27, 50-53, 62-64; plus items from Internal Components Section: 62, 63, 64.)	
72	218134	Seal kit	AR
		(Includes items 4, 8, 15, 28, 56; plus items from Internal Components Section: 8, 10, 49, 65.)	
73	218135	Seal kit	AR
		(Includes items 33, 34; plus items from Internal Components Section: 6, 7, 47.)	
74	218132	Complete Repair Kit	AR
		(Includes items 22, 71, 72, 73; plus items from Internal Components Section: 90, 93, 96-98.)	

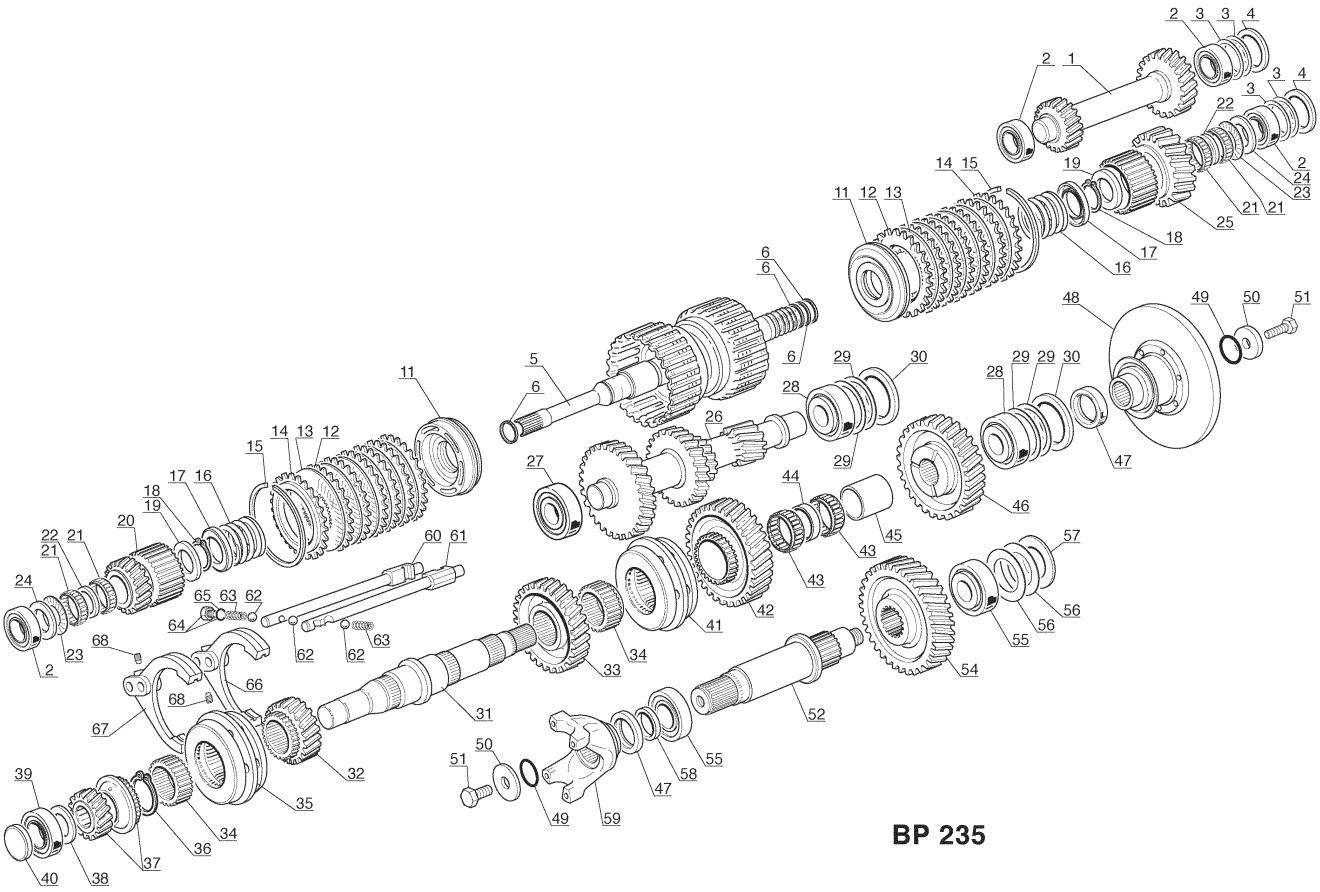
BP 235

Ref. No.	Part No.	Description	Qty. Req.
01	219381	Reverse idler gear	1
02	218297	Bearing	4
03		Shim	AR
	217914	Shim, 0.051 mm	
	217915	Shim, 0.076 mm	
	217916	Shim, 0.127 mm	
	217917	Shim, 0.178 mm	
	217918	Shim, 0.381 mm	
	217919	Shim, 0.508 mm	
04	218278	Spacer	2
05	219295	Input shaft	1
06	218283	Seal	4
11	216996	Piston	2
12	219299	Clutch disc	12
13	219300	Friction disc	12
14	219298	Plate	2
15	219297	Snap ring	2
16	219303	Spring	2
17	219302	Bushing	2
18	219301	Snap ring	2
19	219294	Thrust washer	2
20	219382	Forward primary gear	1
21	218285	Roller bearing	4
22	219311	Spacer	2
23	218119	Bearing	2
24	219285	Stop washer	2
25	219296	Backward primary gear	1
26	219380	Countershaft	1
27	218282	Bearing	1
28	219291	Bearing	2
29	217910	Shim, 0,051 mm	AR
29	217911	Shim, 0,076 mm	AR
29	217912	Shim, 0,0178 mm	AR
29	217913	Shim, 0,0559 mm	AR
30	218279	Spacer	2
31	215158	Output shaft	1
32	215157	3rd gear	1
33	215156	2nd gear	1
34	218277	Coupling sleeve	2
35	218293	Synchro assy	1
36	218292	Snap ring	1
37	215155	4th gear	1
38	219289	Washer	1
39	219198	Bearing	1
40	219215	Plug	1
41	218293	Synchro assy	1
42	218275	Output shaft 1st gear	1
43	218281	Bearing	2
44	218287	Spacer	1
45	218286	Coupling	1
46	219287	Output shaft drive gear	1
47	218288	Seal	2
48	219430	Coupling flange	1
49	217899	O-ring	2
50	218311	Washer	2
51	219312	Bolt	2
52	219428	Output shaft	1
54	219429	Gear (37 teeth)	1
55	219292	Bearing	2
56		Shim	AR
	218120	Shim, 0.051 mm	
	218121	Shim, 0.076 mm	
	218122	Shim, 0.127 mm	
	218123	Shim, 0.178 mm	
57	219288	Spacer	1
58	219310	Spacer	1
59	219309	End yoke	1
60	219315	1st and 2nd shift rod	1
61	219316	3rd and 4th shift rod	1
62	218300	Ball	3
63	219083	Spring	2
64	219223	Plug	1
65	217942	O-ring	1
66	219313	1st and 2nd shift fork	1
67	219314	3rd and 4th shift fork	1
68	218304	Bolt	2

-- ITEMS NOT SHOWN --

(Repair Kits)

92	218129	Small Parts Kit	AR
		(Includes items 62, 63, 64; plus items from External Components Section: 3, 27, 50-53.)	
93	216994	Bearing Kit	AR
		(Includes items 2, 21, 23, 27, 28, 39, 43, 45, 55.)	
94	218134	Seal Kit	AR
		(Includes items 8, 10, 49, 65; plus items from External Components Section: 4, 8, 15, 28, 56.)	
95	218135	Seal Kit	AR
		(Includes items 6, 7, 47; plus items from External Components Section: 33, 34.)	
96	218136	Snap Ring Kit	AR
		(Includes items 15, 18, 36.)	
97	218137	Washer Kit	AR
		(Includes items 3, 29.)	
98	218131	Thrust Washer Kit	AR
		(Includes items 19, 24, 38.)	
99	218132	Complete Repair Kit	AR
		(Includes items 90, 92-98; plus items from External Components Section: 22.)	

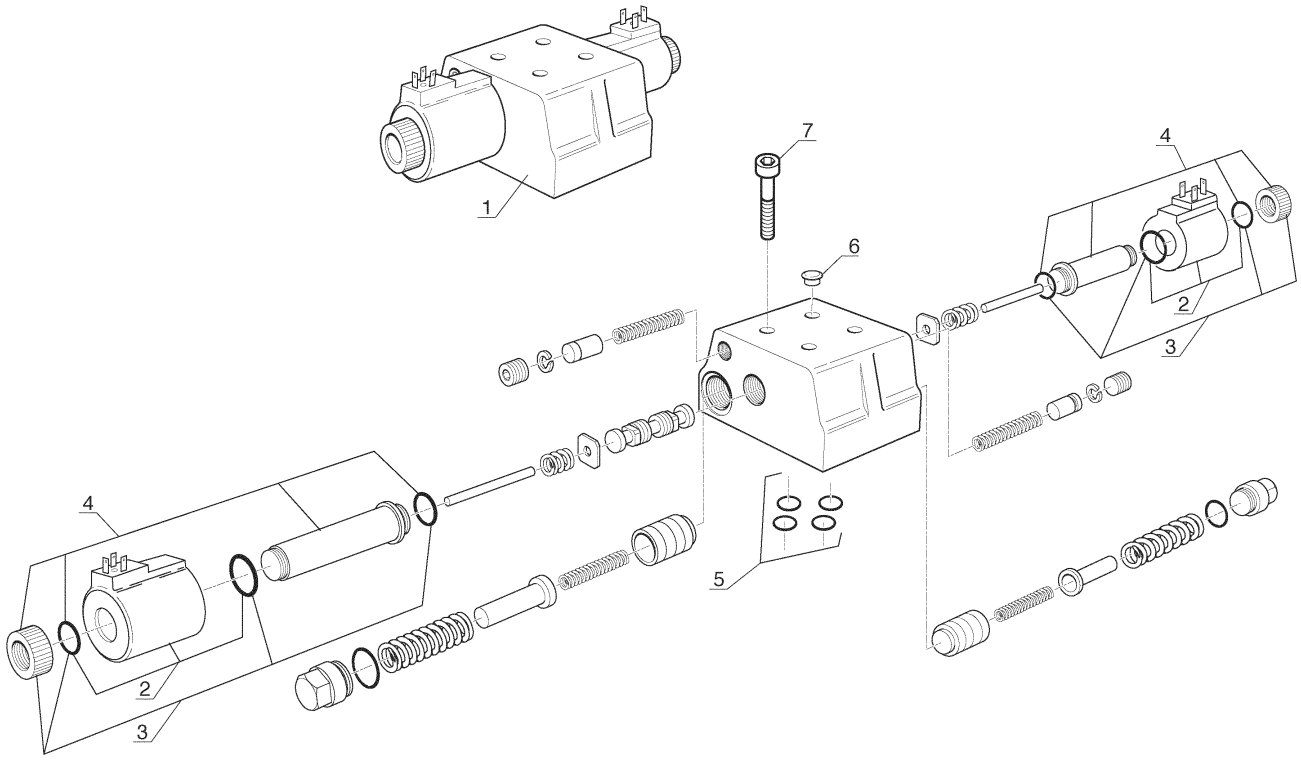

BP 203

Ref. No.	Part No.	Description	Qty. Req.
01	219648	Electrical Control Valve	1
02	216990	Solenoid *(w/seals as shown)*	2
03	216991	Seal Kit, Solenoid/Coil	2
04	216987	Solenoid Valve *(w/seals as shown)*	2
05	219329	Seal Kit *(o-rings)*	1
06	219334	Plug	4
07	219324	Bolt, Socket Head *(Not included with item #1.)*	4
		-- ITEMS NOT SHOWN --	
00	216989	Small Parts Kit *(includes items 5-7)*	AR

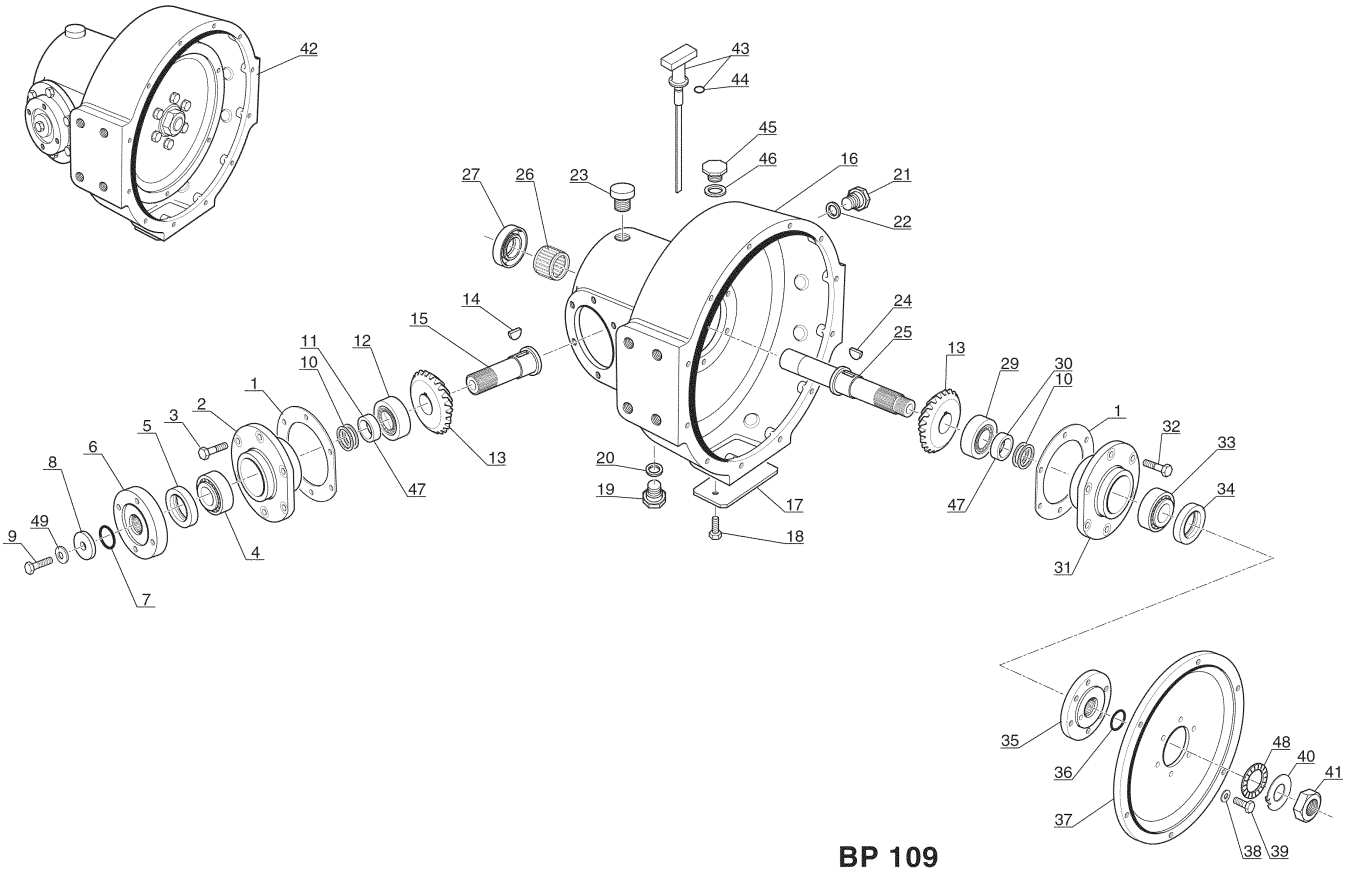
42
43
44
45
46
16
21
22
27
26
23
14
15
24
25
11
12
10
1
2
3
5
6
8
9
49
7
4
13
47
20
19
17
18
13
29
30
10
1
32
33
34
47
31
35
36
37
48
40
41
38
39

BP 109

Ref. No.	Part No.	Description	Qty. Req.
01	218102	Shim, 0.50 mm	AR
	218103	Shim, 0.25 mm	AR
	218104	Shim, 0.10 mm	AR
	218105	Shim, 0.075 mm	AR
	218106	Shim, 0.050 mm	AR
02	219438	Flange	1
03	219192	Bolt	6
04	218297	Bearing	1
05	219196	Seal	1
06	219193	Coupling flange	1
07	219195	O-ring	1
08	219194	Washer	1
09	219312	Bolt	1
10[a]	218107	Shim, 0.50 mm	AR
	218108	Shim, 0.25 mm	AR
	218109	Shim, 0.10 mm	AR
	218110	Shim, 0.075 mm	AR
	218111	Shim, 0.050 mm	AR
11[a]	219197	Spacer	1
12	219443	Bearing	1
13	219512	Bevel gear assy	1
14	219199	Key	1
15	219440	Pin	1
16	219439	Housing	1
17	219210	Cover	1
18	219211	Bolt	2
19	219209	Plug	1
20	219208	Seal	1
21	219201	Plug	1
22	219200	Seal	1
23	218299	Air breather	1
24	219199	Key	1
25	219442	Drive shaft	1
26	219434	Roller bearing	1
27	219441	Seal	1
29	219198	Bearing	1
30[a]	219197	Spacer	1
31	219212	Flange	1
32	219192	Bolt	6
33	219198	Bearing	1
34	219196	Seal	1
35	219207	Flange	1
36	219195	O-ring	1
37	219202	Flange	1
38	219203	Washer	6
39	219204	Bolt	6
40	219205	Lock washer	1
41	219206	Nut	1
42	218566	Bevel drive	1
43	219683	Gauge	1
44	218336	O-ring	1
45	219201	Plug	1
46	219200	Seal	1
47[b]	218221	Spacer, 11.63mm / 11.65mm	AR
	218222	Spacer, 11.66mm / 11.68mm	AR
	218223	Spacer, 11.69mm / 11.71mm	AR
	218224	Spacer, 11.72mm / 11.74mm	AR
	218225	Spacer, 11.75mm / 11.77mm	AR
	218226	Spacer, 11.78mm / 11.80mm	AR
	218227	Spacer, 11.81mm / 11.83mm	AR
	218228	Spacer, 11.84mm / 11.86mm	AR
	218229	Spacer, 11.87mm / 11.89mm	AR
	218230	Spacer, 11.90mm / 11.92mm	AR
	218231	Spacer, 11.93mm / 11.95mm	AR
	218232	Spacer, 11.96mm / 11.98mm	AR
	218254	Spacer, 11.57mm / 11.59mm	AR
	218255	Spacer, 11.60mm / 11.62mm	AR
	218256	Spacer, 11.99mm / 12.01mm	AR
	218257	Spacer, 12.02mm / 12.04mm	AR
48[c]	219205	Washer	1
49[d]	215938	Washer	1

a *If equipped with item #10, then use item #11 and item #30. Do not use item #47.*

b *If not equipped with item #10, do not use items #11 or #30. Use only item #47.*

c *Used on Transfer Case SN B04.24929 and before. (Do not use item #49)*

d *Used on Transfer Case SN B04.24930 and up. (Do not use item #48)*

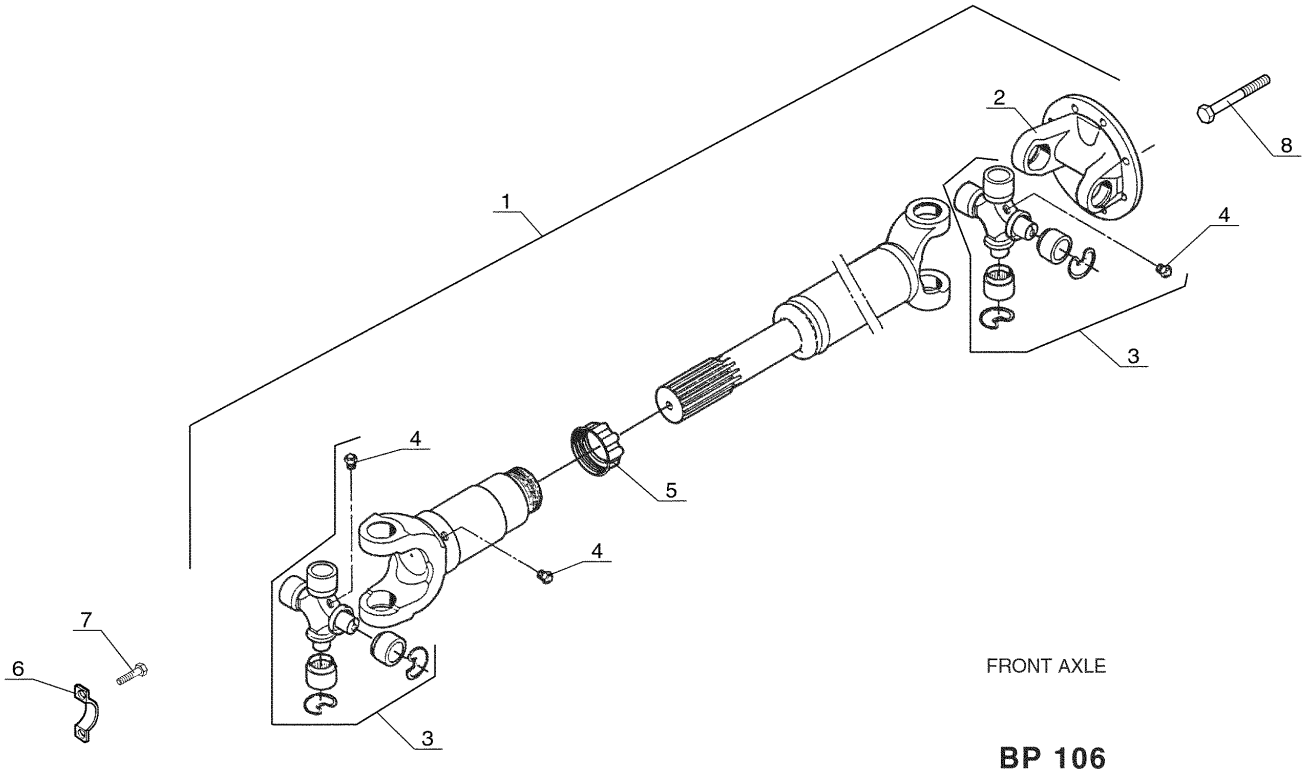

Ref. No.	Part No.	Description	Qty. Req.	Ref. No.	Part No.	Description	Qty. Req.
01	218596	Driveshaft Assembly	1	05	218309	Seal	1
02	218310	Flange yoke	1	06	218305	Half-clamp	2
03	218307	Universal Joint	2	07	218306	Bolt	4
04	218308	Grease Zerk	3	08	219020	Bolt	8

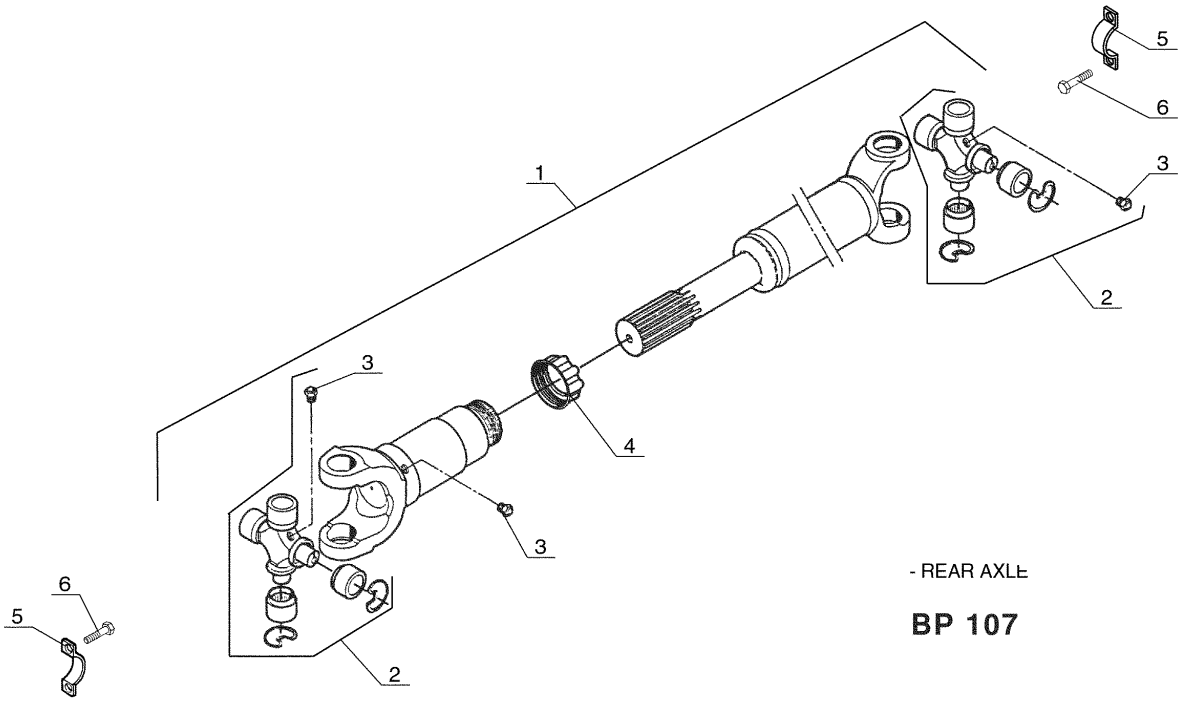

Ref. No.	Part No.	Description	Qty. Req.	Ref. No.	Part No.	Description	Qty. Req.
01	218597	Driveshaft Assembly	1	04	218309	Seal	1
02	218307	Universal Joint	2	05	218305	Half-clamp	4
03	218308	Grease Zerk	3	06	218306	Bolt	8

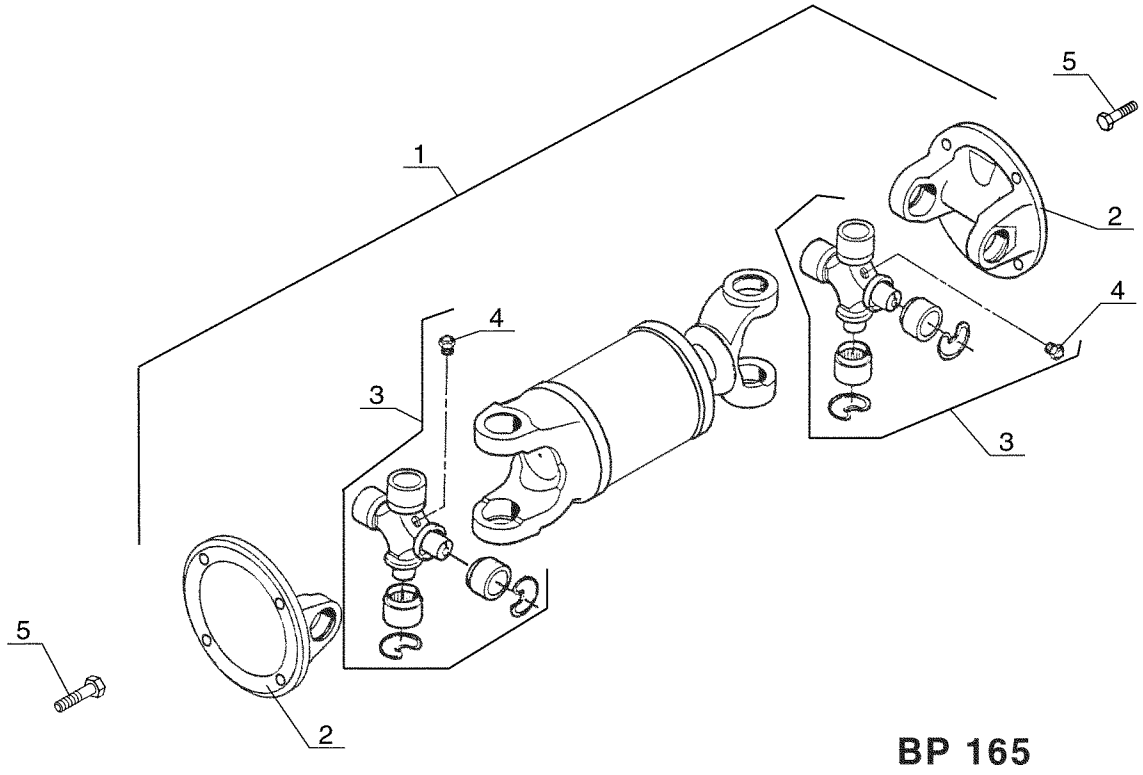
1
2
3
4
5
BP 165

Ref. No.	Part No.	Description	Qty. Req.
01	215982	Driveshaft Assembly *(includes item #5)*	1
02	219435	Flange yoke	2
03	219220	U-Joint	2
04	218308	Grease zerk	2
05	218806	Bolt	8

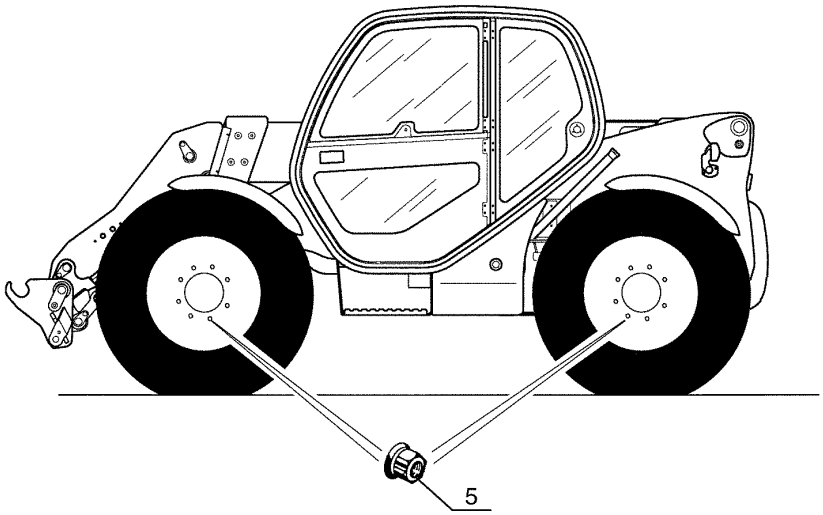

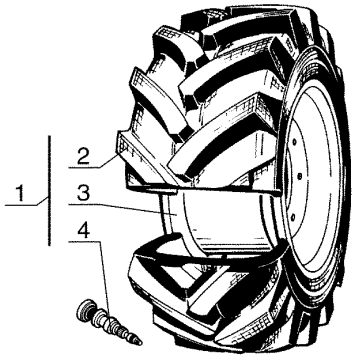

3 AA 203

Ref. No.	Part No.	Description	Qty. Req.
01	NSS	Complete Wheel	4
02[a]	NSS	Tire, 17.5LR24	4
03	103211	Wheel rim, W14 L24	4
04	219848	Valve	4
05	219000	Wheel Nut	AR

a *Obtain locally; Michelin17.5LR24TL, 145A8XM27*

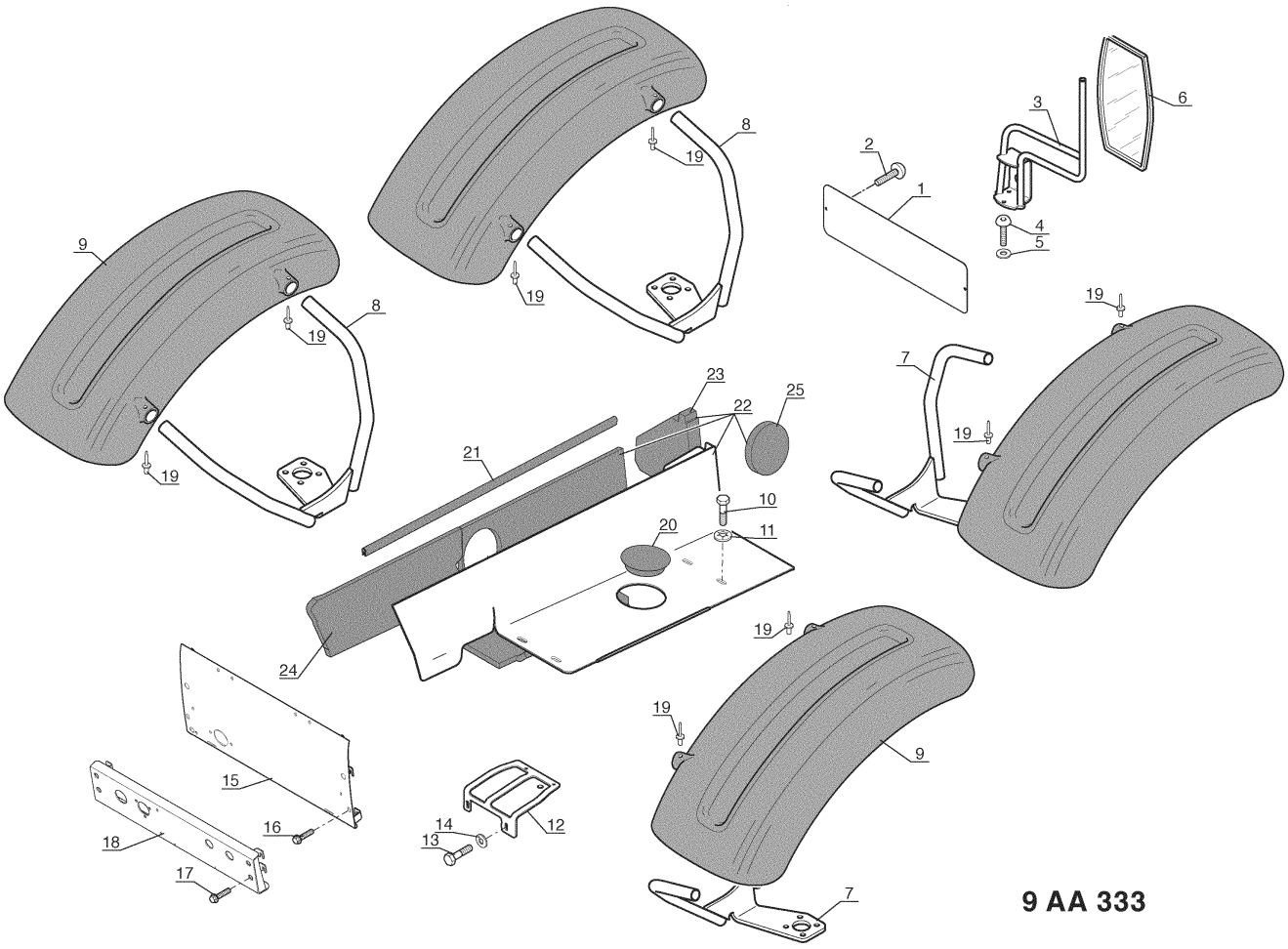

Ref. No.	Part No.	Description	Qty. Req.
01	217625	Cover	1
02	217691	Bolt	2
03	218723	Rearview mirror bracket	1
04	218755	Bolt	3
05	218510	Washer	3
06	215314	Rearview mirror	1
07	218863	R.H. fender bracket	2
08	218862	L.H. fender bracket	2
09	218579	Fender	4
10	219184	Bolt	4
11	219867	Washer	4
12	215379	Rear bracket	1
13	219055	Bolt	2
14	218510	Washer	2
15	215378	Rear Cover	1
16	218907	Bolt	4
17	218907	Bolt	4
18	218906	Rear Cover	1
19	219920	Rivet	8
20	218541	Plug	1
21	218788	Weatherstrip	1
22	106341	Center housing cover	1
23	218833	Sound-proofing foam	1
24	215380	Sound-proofing foam	1
25	215939	Sound-proofing foam	1

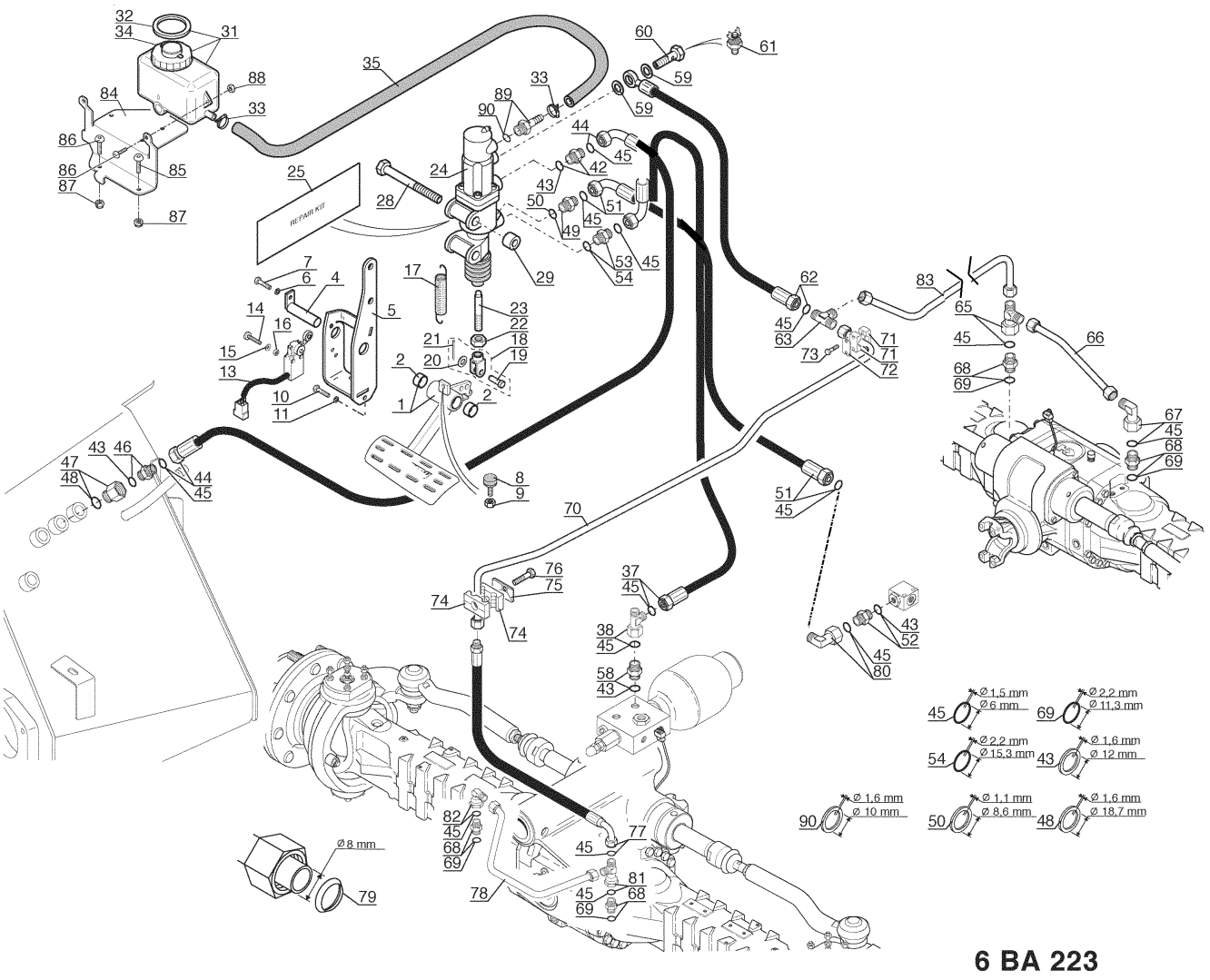
REPAIR KIT
Ø 8 mm
Ø 1,5 mm
Ø 6 mm
Ø 2,2 mm
Ø 11,3 mm
Ø 2,2 mm
Ø 15,3 mm
Ø 1,6 mm
Ø 12 mm
Ø 1,6 mm
Ø 10 mm
Ø 1,1 mm
Ø 8,6 mm
Ø 1,6 mm
Ø 18,7 mm
6 BA 223

Ref. No.	Part No.	Description	Qty. Req.
01	215345	Brake pedal	1
04	218039	Articulating pin	1
05	218034	Brake pedal bracket	1
06	218510	Washer	1
07	218495	Bolt, M8-16	1
08	218442	Rubber stop	1
09	217979	Nut, M8	1
10	219184	Bolt, M8-16	1
11	219054	Washer	1
13	219954	Transmission cut-off switch	1
14	219849	Bolt, M4-25	2
15	219926	Washer	2
16	219023	Nut, M4	2
17	218099	Spring	1
18	219268	Complete fork joint	1
19	219060	Pin	1
20	219028	Washer	1
21	219853	Pin	1
22	219422	Nut	1
23	215940	Master cylinder pusher	1
24	218038	Complete master cylinder	1
25	219987	Repair kit	1
28	219863	Bolt	2
29	218021	Spacer	2
31	218857	Brake fluid tank	1
32	219676	Seal	1
33	218737	Clamp	2
34	219677	Plug	1
35	215344	Hose, Brake Supply	1
37	218055	Hose *(1900 mm long)*	1
42	218453	Adapter	1
43	217929	Seal	AR
44	218006	Hose	1
45	217943	O-ring	AR
46	218453	Adapter	1
47	218095	Adapter	1
48	217933	Seal	AR
49	217990	Adapter	1
50	217985	Seal	AR
51	217982	Hose	1
52	218453	Adapter	1
53	215941	Adapter	1
54	217923	O-ring	AR
56	218443	Adapter	1
58	218453	Adapter	1
59	217897	Copper seal	2
60	217945	Hollow bolt	1
61	217932	Stop switch	1
62	219940	Hose	1
63	219923	Adapter	1
65	218443	Adapter	1
66	218565	Tube	1
67	219156	Adapter	1
68	218388	Adapter	4
69	217928	O-ring	AR
70	218679	Tube	1
71	218378	Half-clamp	2
72	218364	Protection plate	1
73	219171	Bolt	2
74	218367	Half-clamp	2
75	218361	Protection plate	1
76	219617	Bolt	1
77	218771	Hose	1
78	218770	Tube	1
79	217927	Seal	AR
80	219156	Adapter	1
81	218443	Adapter	1
82	219156	Adapter	1
83	218680	Tube	1
84	215343	Bracket, Brake Reservoir	1
85	217523	Bolt, M4	1
86	218511	Bolt, M4-12	3
87	219150	Nut, FR M4	2
88	219023	Nut, M4	2
89	215342	Adapter, Brake Hose	1
90	216767	Seal	AR

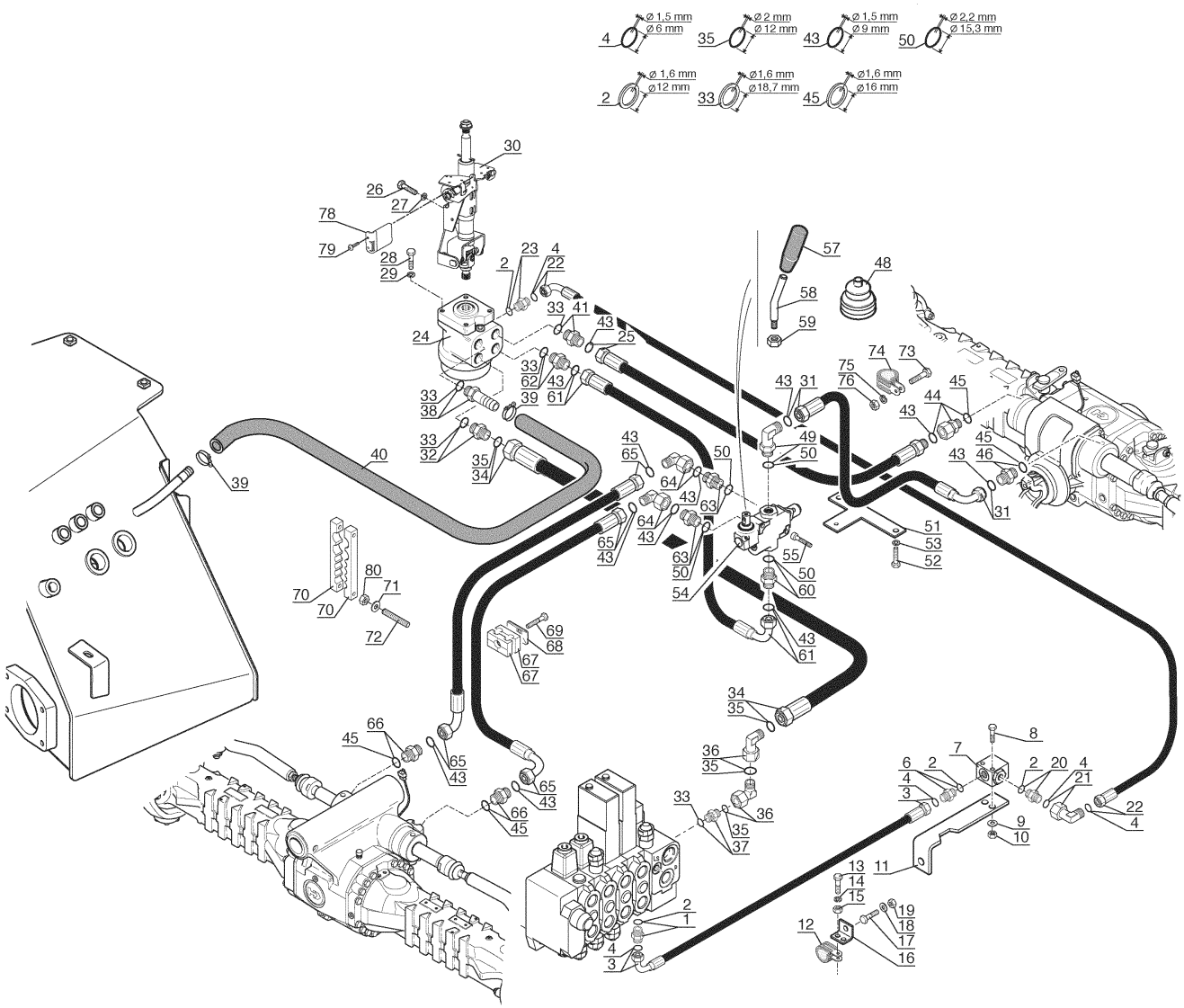
4 Ø 1,5 mm Ø 6 mm
35 Ø 2 mm Ø 12 mm
43 Ø 1,5 mm Ø 9 mm
50 Ø 2,2 mm Ø 15,3 mm
2 Ø 1,6 mm Ø 12 mm
33 Ø 1,6 mm Ø 18,7 mm
45 Ø 1,6 mm Ø 16 mm

10 BA 307

Ref. No.	Part No.	Description	Qty. Req.
01	218453	Adapter	1
02	217929	Seal	AR
03	217984	Hose	1
04	217943	O-ring	AR
06	218453	Adapter	1
07	218090	Valve	1
08	217901	Bolt	2
09	218439	Washer	2
10	218344	Nut	2
11	218015	Valve bracket	1
12	218391	Clamp	1
13	219872	Bolt	1
14	219054	Washer	1
15	219616	Nut	1
16	218433	Bracket	1
17	219868	Bolt	1
18	219051	Washer	1
19	219422	Nut	1
20	218453	Adapter	1
21	219156	Adapter	1
22	217984	Hose	1
23	218453	Adapter	1
24	218474	Steer Motor	1
25	218531	Hose *(1450 mm long)*	1
26	219021	Bolt, M6-16	4
27	218439	Washer, M6	4
28	219613	Bolt, M0-25	4
29	219051	Washer, W10	4
30	215277	Steering Column	1
31	218525	Hose *(1300 mm long)*	2
32	219148	Adapter	1
33	217933	Seal	AR
34	218037	Hose	1
35	217942	O-ring	AR
36	218464	Adapter	2
37	219148	Adapter	1
38	215275	Adapter	1
39	218497	Clamp	2
40	218815	Hose	1
41	218450	Adapter	1
43	217947	O-ring	AR
44	218554	Adapter	1
45	217833	Seal	AR
46	219045	Adapter	1
48	218736	Bellows	1
49	218793	Adapter	1
50	217923	O-ring	AR
51	218796	Bracket	1
52	219055	Bolt	2
53	219054	Washer	2
54	218695	Valve bank	1
55	219166	Bolt	2
57	218492	Handle	1
58	218789	Lever	1
59	219616	Nut	1
60	218362	Adapter	1
61	218498	Hose	1
62	218450	Adapter	1
63	218362	Adapter	2
64	218473	Adapter	2
65	218534	Hose	2
66	219045	Adapter	2
67	218363	Half-clamp	2
68	218361	Protection plate	1
69	219617	Bolt	1
70	218812	Half-clamp	2
71	218439	Washer	2
72	218837	Bolt	2
73	219610	Bolt	1
74	218391	Clamp	1
75	219054	Washer	1
76	219616	Nut	1
77	219022	Nut	2
78	215276	Lever	1
79	218511	Bolt, M4-12	2

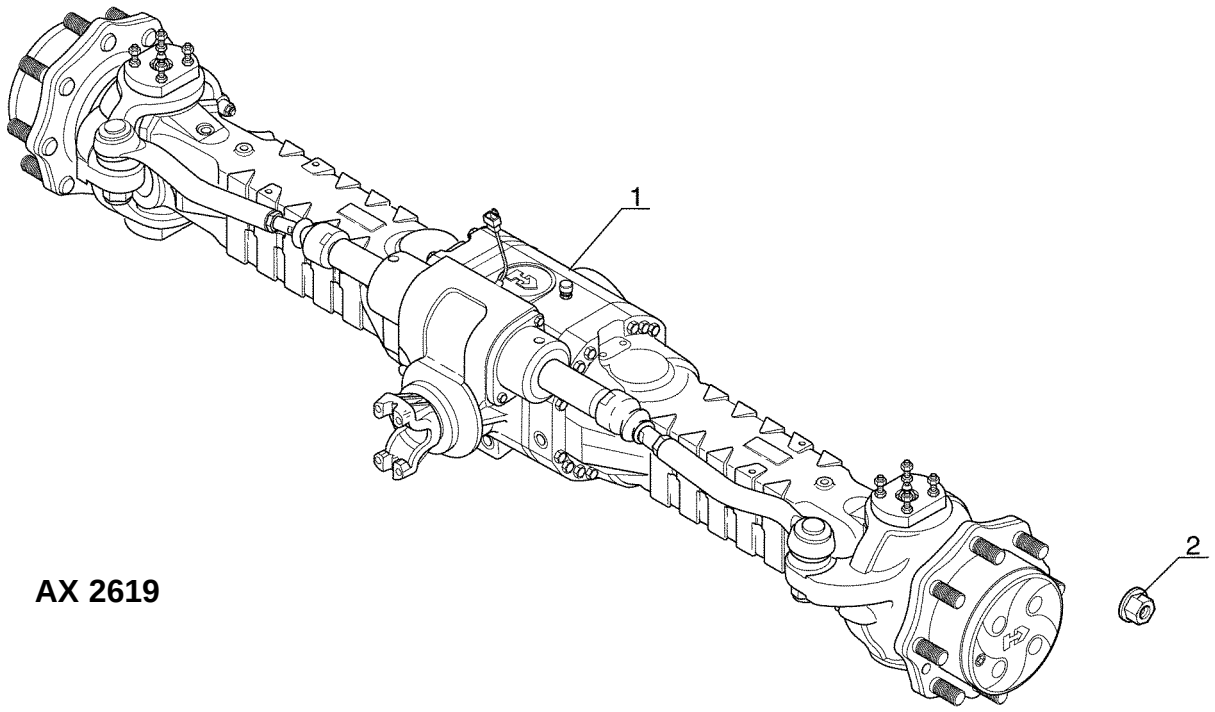

AX 2619

Ref. No.	Part No.	Description	Qty. Req.
01	218908	Front axle	1
02	219000	Wheel nut	16

NOTE: *Refer to Chassis Section - Frame and Axle Mount for information regarding front axle mount.*

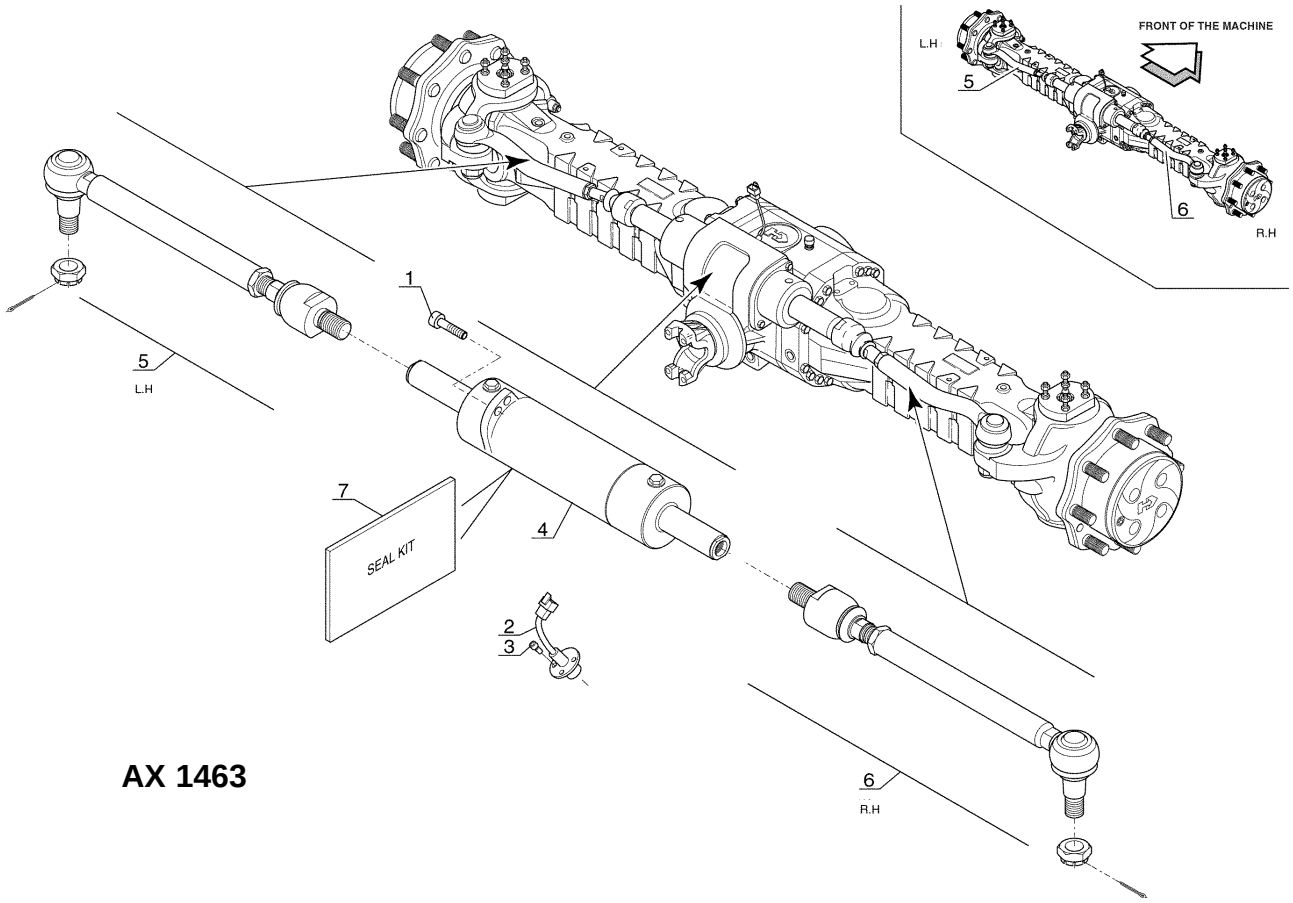

AX 1463

Ref. No.	Part No.	Description	Qty. Req.
01	219371	Bolt	4
02	219710	Wheel alignment switch	1
03	219144	Bolt	3
04	219546	Steering cylinder	1
05	219547	Linked tie-rod	1
06	219548	Linked tie-rod	1
07	219385	Seal kit	1

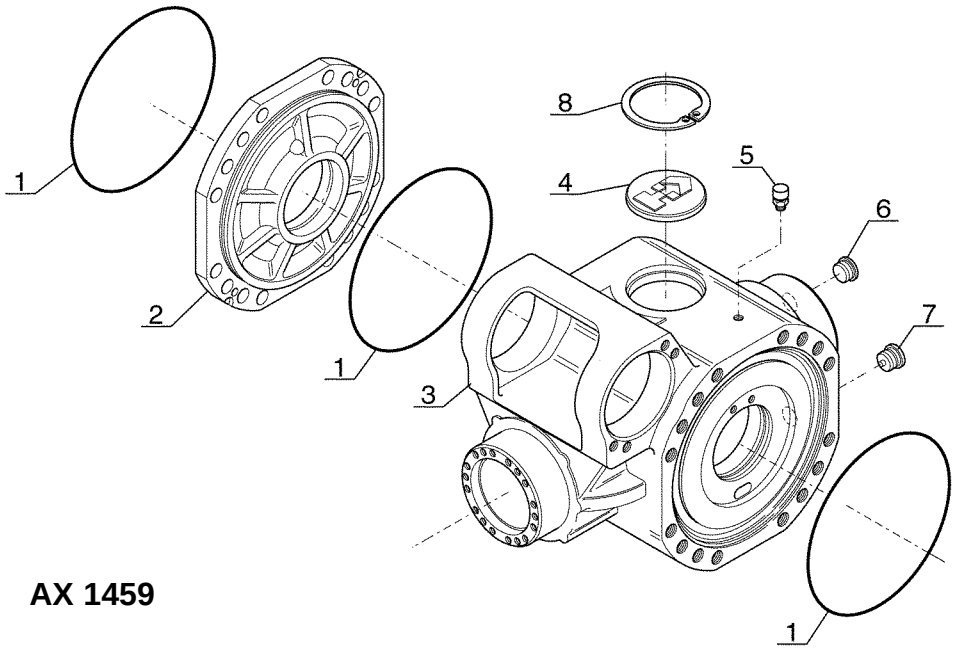

AX 1459

Ref. No.	Part No.	Description	Qty. Req.	Ref. No.	Part No.	Description	Qty. Req.
01	218263	O-ring	3	05	219340	Air breather	1
02	219372	Housing	1	06	219700	Plug	1
03	219706	Housing	1	07	219701	Magnetic plug	1
04	219681	Plug	1	08	218317	Snap ring	1

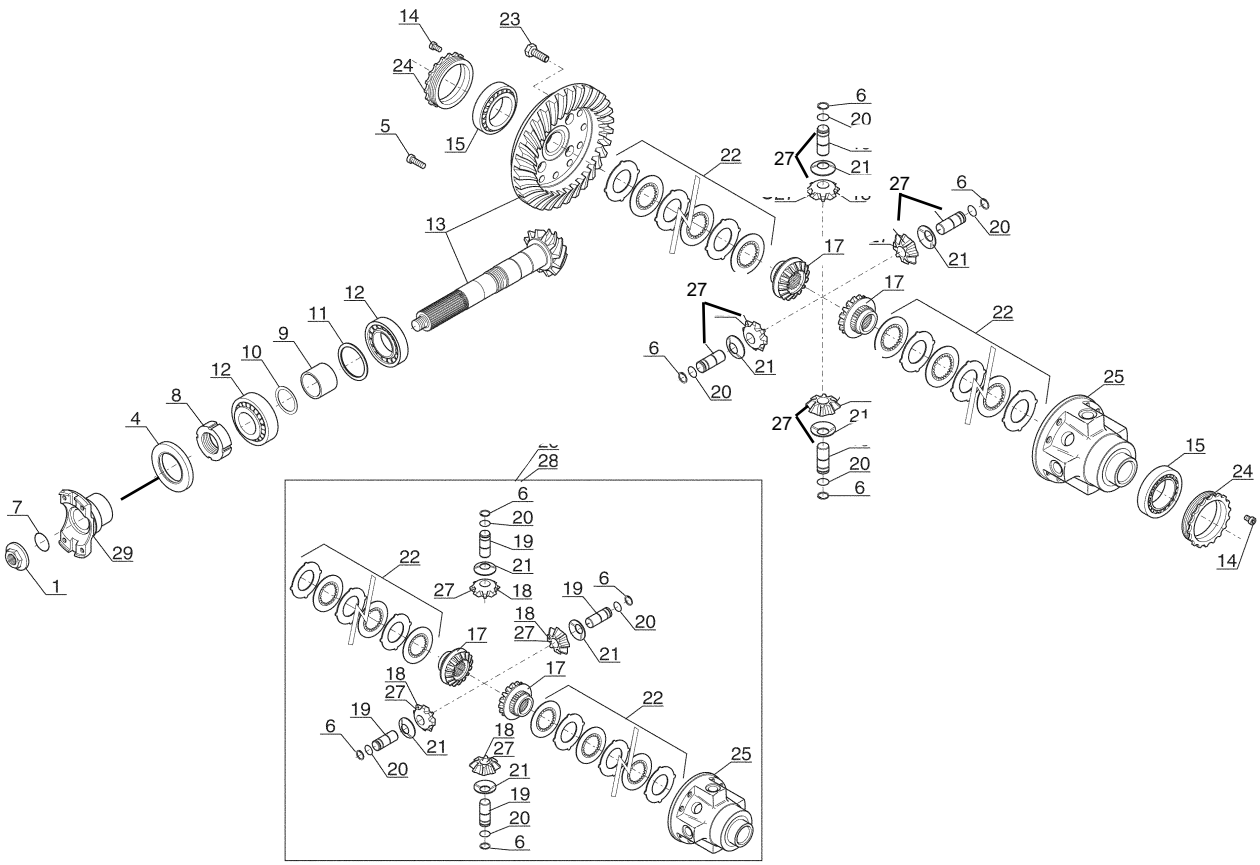

AX 1461

Ref. No.	Part No.	Description	Qty. Req.
01	218138	Nut	1
04	218266	Seal	1
05	218321	Bolt	4
06	219353	Snap ring	4
07	219341	O-ring	1
08	218322	Nut	1
09	219351	Spacer	1
10		Shim	AR
	218100	Shim, 0.15 mm	
	218101	Shim, 0.20 mm	
	218114	Shim, 0.40 mm	
	218118	Shim, 0.50 mm	
11		Shim	AR
	218086	Shim, 0.20 mm	
	218087	Shim, 0.30 mm	
	218113	Shim, 0.15 mm	
	218117	Shim, 0.10 mm	
12	218318	Bearing	2
13	219635	Bevel drive gear	1
14	218314	Bolt	2
15	218264	Bearing	2
17	NSS	Planetary	2
20	219347	Snap ring	4
21	219348	Washer	4
22	219679	Clutch disc kit	2
23	219656	Bolt	12
24	219342	Nut	2
25	219402	Differential housing	1
26	NSS	(Order item # 28)	1
27	215419	Kit/ Gear-Pin Replacement	4
28	219898	Differential kit	1
29	216978	Flange	1

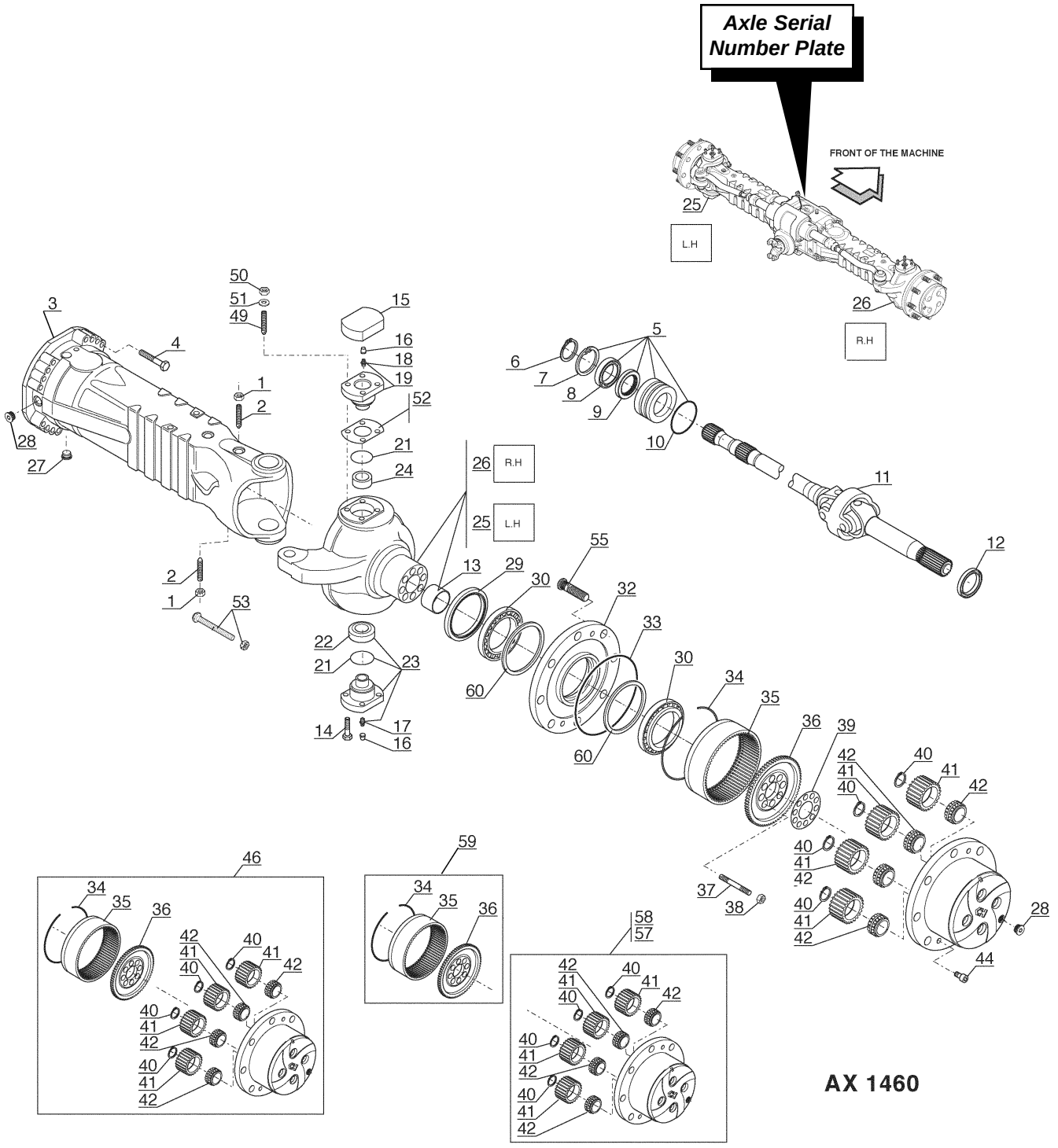
Axle Serial Number Plate
FRONT OF THE MACHINE
L.H
R.H
AX 1460

Front Axle - Outer End Group

Ref. No.	Part No.	Description	Qty. Req.
01	218319	Nut	4
02	219374	Needle valve	4
03	219658	Axle Case Housing	2
04	219883	Bolt	32
05	219499	Flange	2
06	218260	Snap ring	2
07	218317	Snap ring	2
08	218259	Bearing	2
09	218271	Seal	2
10	219375	O-ring	2
11	219404	U-Joint	2
12	219703	Seal	2
13	219143	Bushing	2
14	219343	Bolt	8
15	219638	Cover	2
16	218270	Plug	4
17	218320	Grease Zerk	2
18	219560	Grease Zerk	2
19	219559	Pivot pin	2
21	219354	Seal	4
22	219355	Bushing	2
23	219595	Pivot pin	2
24	219702	Bushing	2
25	219705	Steering case	1
26	219704	Steering case	1
27	219701	Magnetic plug	2
28	219700	Plug	4
29	219714	Seal	2
30	219356	Bearing	4
32	219657	Wheel hub	2
33	218263	O-ring	2
34	219362	Snap ring	2
35	219545	Planetary Hub Gear Ring	2
36	219608	Planetary Gear	2
37	219360	Stud-bolt	16
38	219361	Nut	16
39	219363	Locking plate	2
40	219357	Snap Ring	8
41	219358	Planetary Wheel	8
42	219359	Bearing	8
44	219640	Bolt	4
46[a]	219690	Planetary Wheel Kit	2
49	219712	Stud-bolt	8
50	219641	Nut	8
51	219642	Washer	8
52	218172	Shim, 0.15 mm	AR
	218173	Shim, 0.20 mm	AR
	218174	Shim, 0.50 mm	AR
53	219895	Adjusting bolt	4
55	219897	Wheel stud	16
58	215460	Planetary Wheel Kit	2
59[b]	215459	Planetary Ring Gear Kit	2
60	216249	Shim	AR

a *Axle SN F.ITA.787 427 and before*
b *Axle SN F.ITA.787 428 and up*

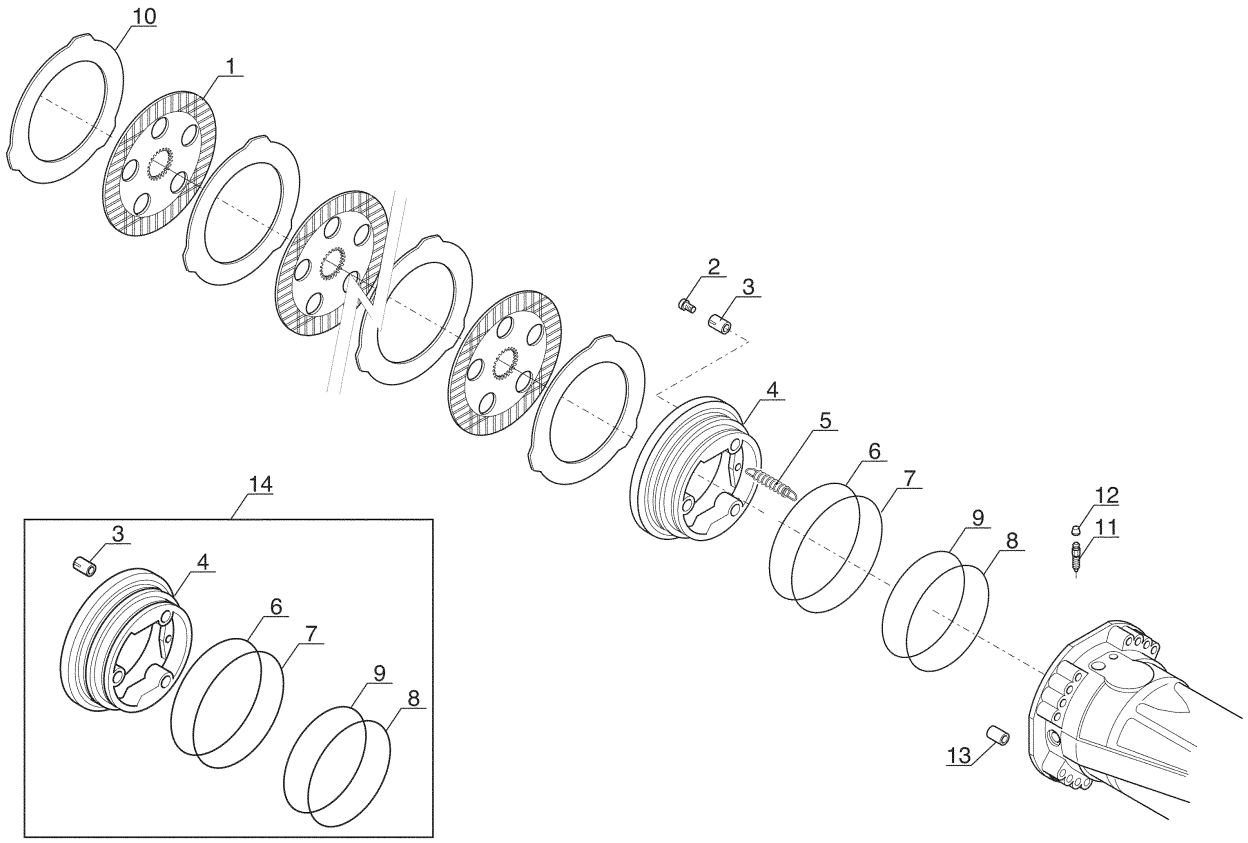

AX 1462

Ref. No.	Part No.	Description	Qty. Req.
01	219364	Brake Disc	8
02	215160	Adjusting Bolt	6
03	219682	Spring	6
04	219501	Piston *(sold only as kit; item #14)*	2
05	219365	Spring	6
06	219366	Anti-extrusion Seal	2
07	219367	O-ring	2
08	219368	Anti-extrusion Seal	2
09	219369	O-ring	2
10	219370	Intermediate Disc	10
11	218261	Bleeder Bolt	2
12	218270	Plug	2
13	218269	Centering Pin	2
14	219501	Piston Kit	2

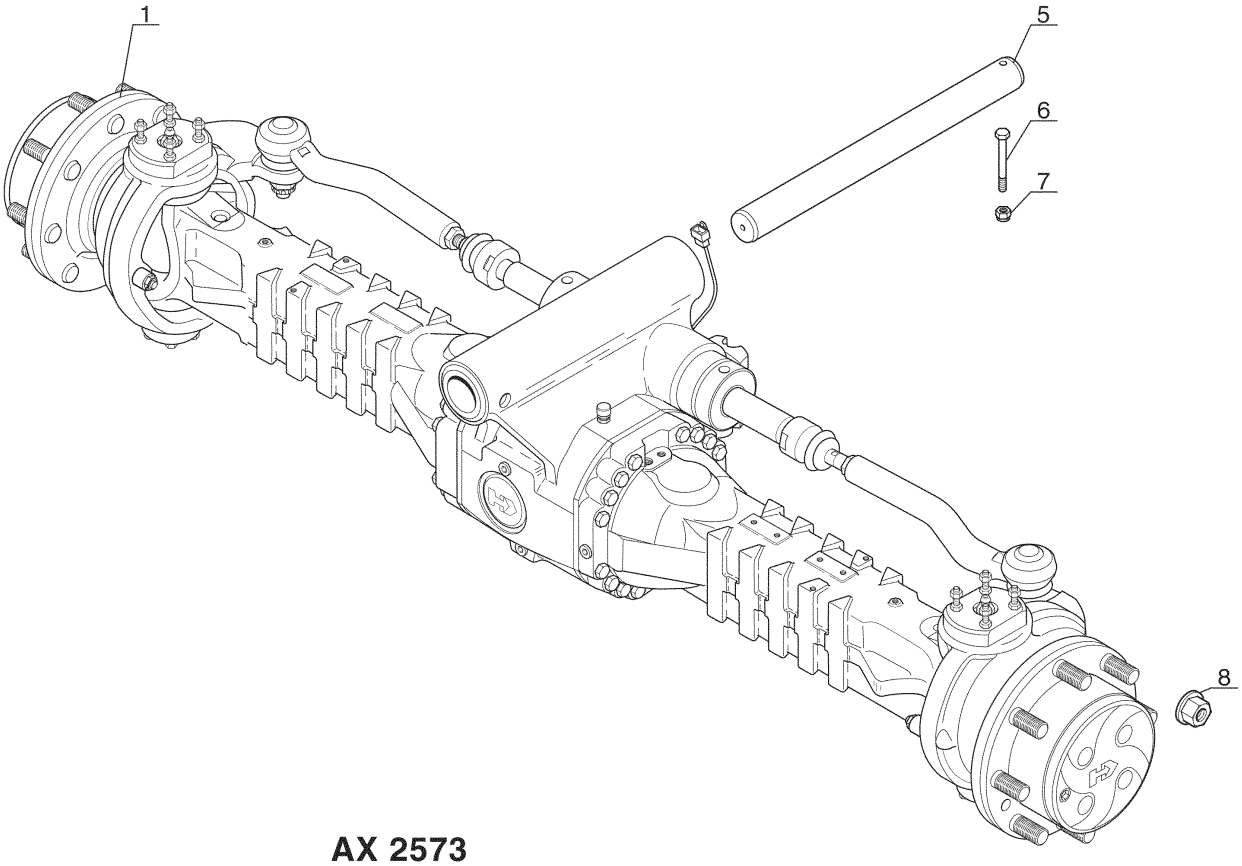

AX 2573

Ref. No.	Part No.	Description	Qty. Req.	Ref. No.	Part No.	Description	Qty. Req.
01	218909	Rear axle	1	07	219269	Nut	1
05	218583	Articulating pin	1	08	219000	Wheel nut	16
06	218358	Bolt	1				

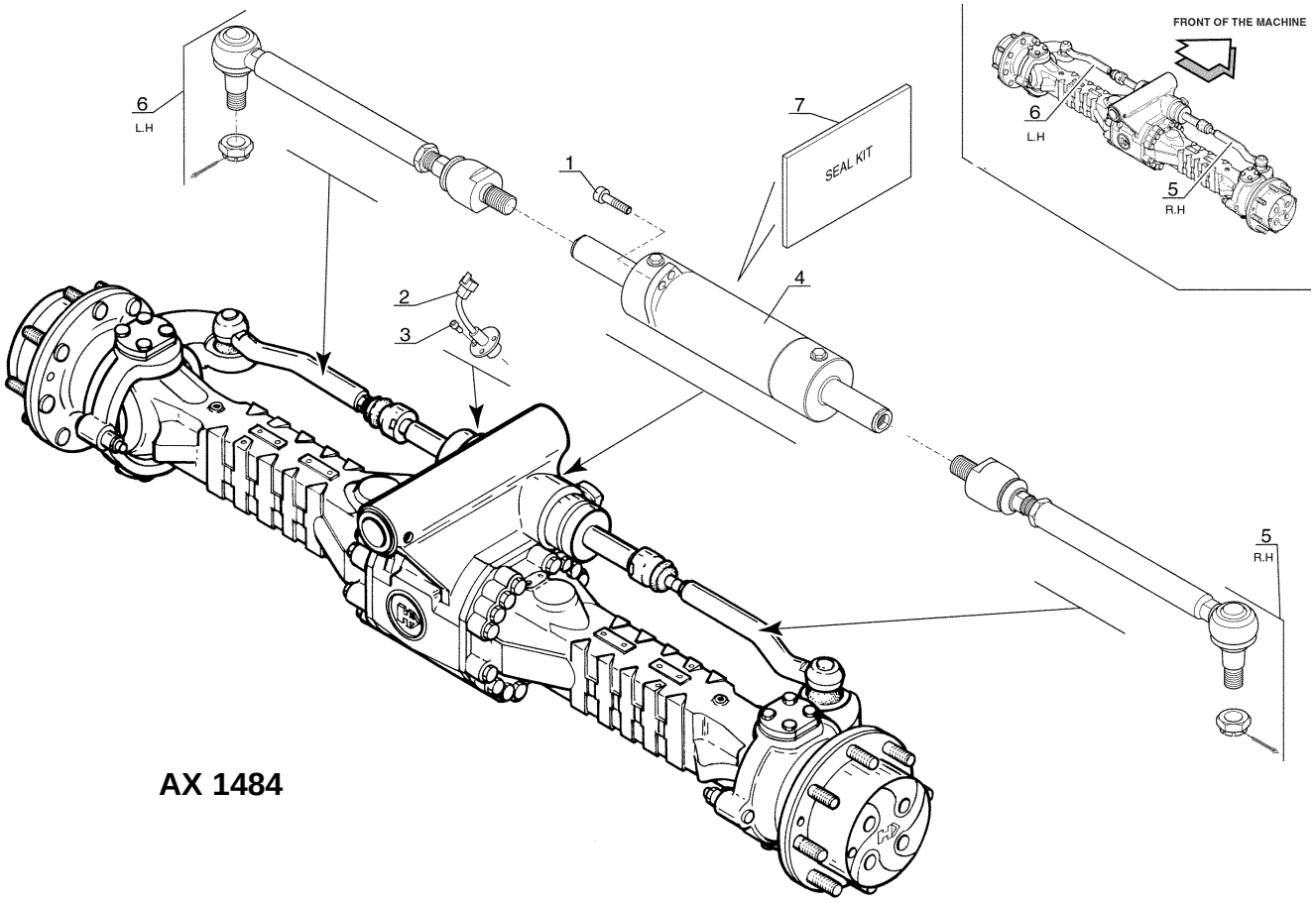

Ref. No.	Part No.	Description	Qty. Req.
01	219371	Bolt	4
02		Wheel alignment switch	1
	219710	*Note a*	
	215219	*Note b*	
03	219144	Bolt	3
04	219549	Steering cylinder	1
05	219547	Linked tie-rod	1
06	219548	Linked tie-rod	1
07	219385	Seal kit	1

a *Axle SN H.ITA.718 575 and before*
b *Axle SN H.ITA.718 576 and up*

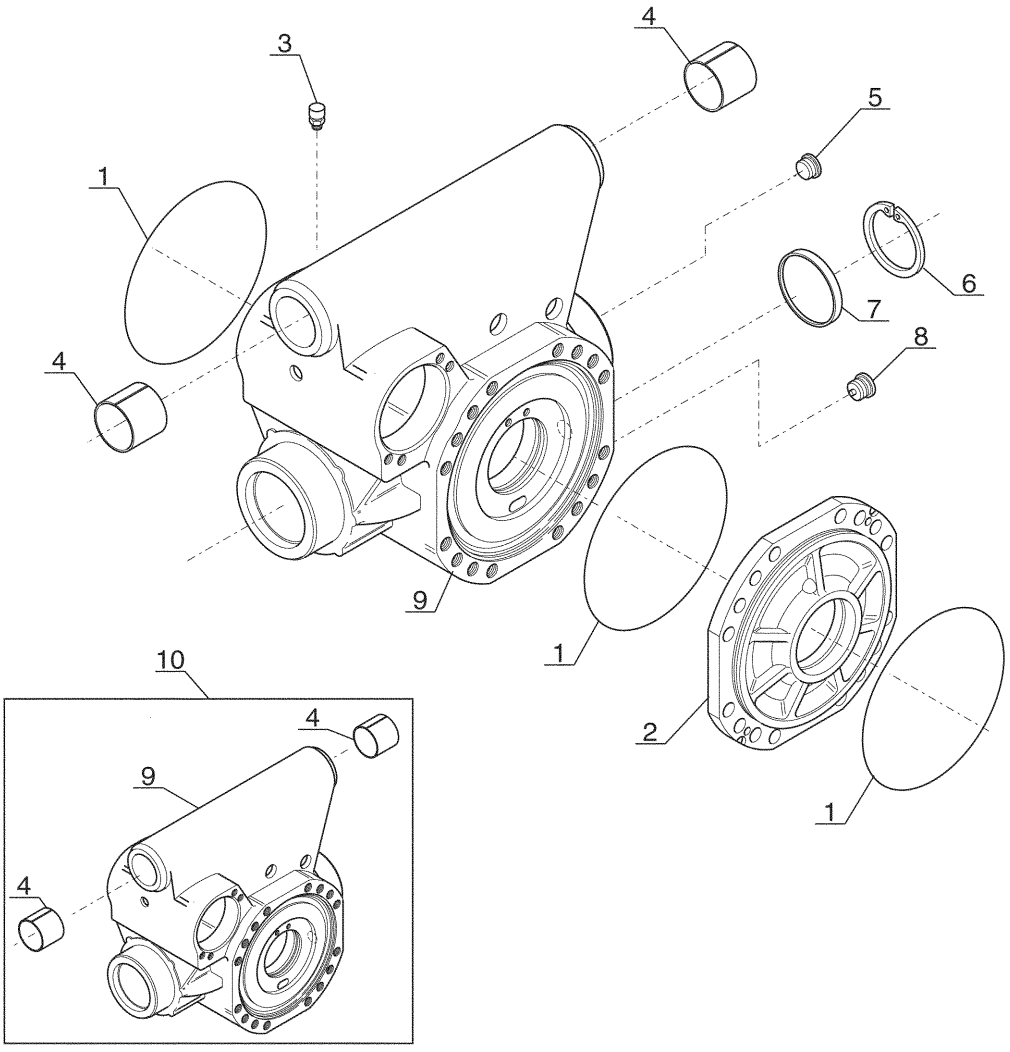

AX 1480

Ref. No.	Part No.	Description	Qty. Req.	Ref. No.	Part No.	Description	Qty. Req.
01	218263	O-ring	3	06	218317	Snap ring	1
02	219372	Housing	1	07	219681	Plug	1
03	219340	Air breather	1	08	219701	Magnetic plug	1
04	219649	Bushing	2	09	219659	Central casing	1
05	219700	Plug	1	10	219884	Housing kit	1

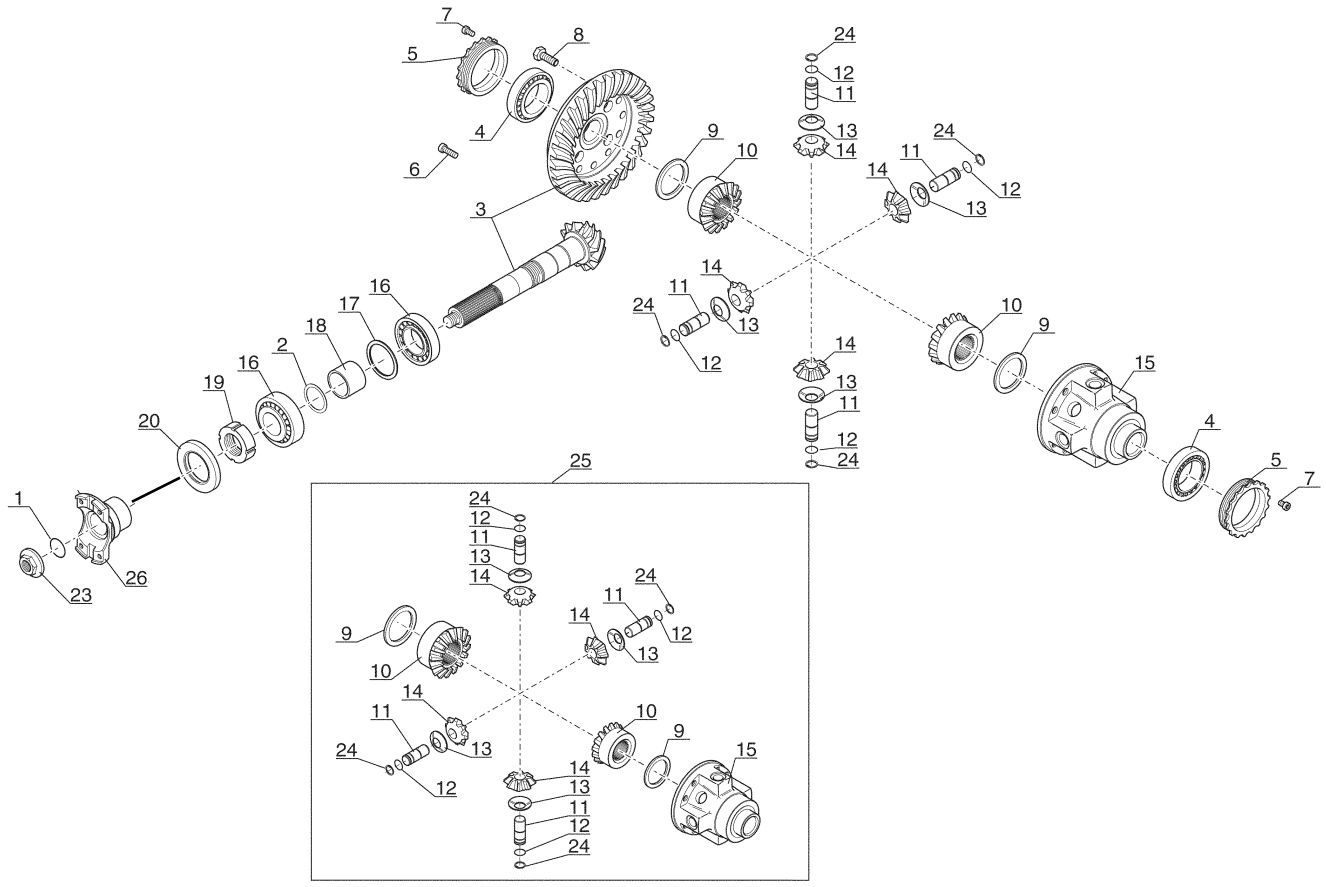

Ref. No.	Part No.	Description	Qty. Req.
01	219341	O-ring	1
02		Shim	AR
	218100	Shim, 0.15 mm	
	218101	Shim, 0.20 mm	
	218114	Shim, 0.40 mm	
	218118	Shim, 0.50 mm	
03	219635	Bevel drive gear	1
04	218264	Bearing	2
05	219342	Nut	2
06	218321	Bolt	4
07	218314	Bolt	2
08	219656	Bolt	12
09	219344	Washer	2
10	219345	Planetary	2
11	215419	Pin	4
12	219347	Snap ring	4
13	219348	Washer	4
14	215455	Planet wheel	4
15	219350	Differential housing	1
16	218318	Bearing	2
17		Shim	AR
	218086	Shim, 0.20 mm	
	218087	Shim, 0.30 mm	
	218113	Shim, 0.15 mm	
	218117	Shim, 0.10 mm	
18	219351	Spacer	1
19	218322	Nut	1
20	218266	Seal	1
23	218138	Nut	1
24	219353	Snap ring	4
25	219636	Rear axle differential	1
26	216978	Flange	1

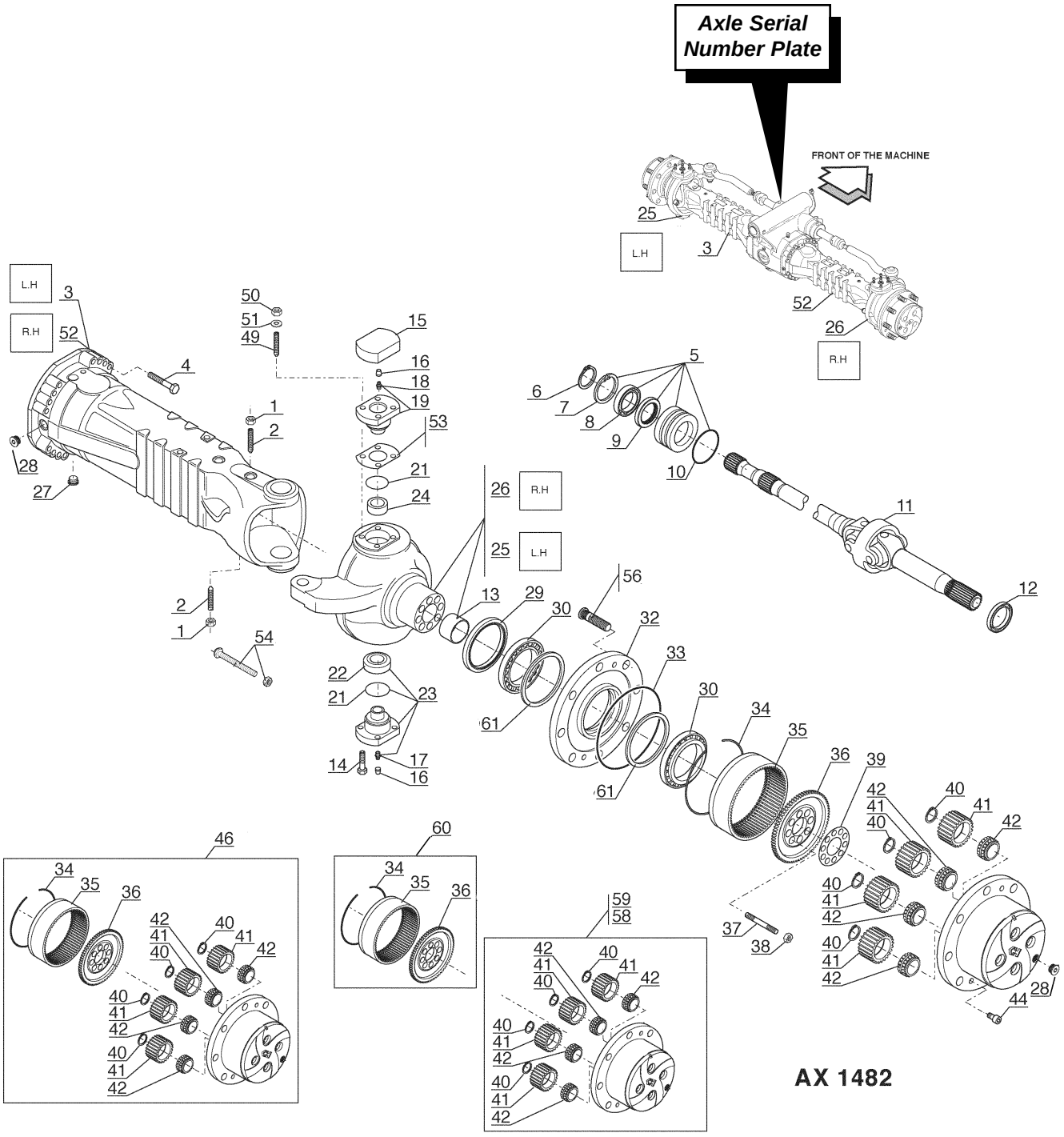
Axle Serial Number Plate
FRONT OF THE MACHINE
L.H
R.H
AX 1482

Ref. No.	Part No.	Description	Qty. Req.
01	218319	Nut	4
02	219374	Needle valve	4
03	219658	Lateral axle case	2
04	219883	Bolt	32
05	219499	Flange	2
06	218260	Snap ring	2
07	218317	Snap ring	2
08	218259	Bearing	2
09	218271	Seal	2
10	219375	O-ring	2
11	219404	U-Joint	2
12	219703	Seal	2
13	219143	Bushing	2
14	219343	Bolt	8
15	219638	Cover	2
16	218270	Plug	4
17	218320	Grease Zerk	2
18	219560	Grease Zerk	2
19	219559	Pivot pin	2
21	219354	Seal	4
22	219355	Bushing	2
23	219595	Pivot pin	2
24	219702	Bushing	2
25	219704	Steering case	1
26	219705	Steering case	1
27	219701	Magnetic plug	2
28	219700	Plug	4
29	219714	Seal	2
30	219356	Bearing	4
32	219657	Wheel hub	2
33	218263	O-ring	2
34	219362	Snap ring	2
35	219545	Gear ring	2
36	219608	Ring gear bracket	2
37	219360	Stud-bolt	16
38	219361	Nut	16
39	219363	Locking plate	2
40	219357	Snap ring	8
41	219358	Planet wheel	8
42	219359	Bearing	8
44	219640	Bolt	4
46[a]	219690	Planet wheel kit	2
49	219712	Stud-bolt	8
50	219641	Nut	8
51	219642	Washer	8
52	219660	Axle Housing	1
53	218172	Shim, 0.15 mm	AR
	218173	Shim, 0.20 mm	AR
	218174	Shim, 0.50 mm	AR
54	219895	Adjusting bolt	4
56	219897	Wheel stud	16
59	215460	Planetary Gear Kit	2
60[b]	215459	Planetary Gear Kit	2
61	216249	Shim	AR

a *Axle SN G.ITA.702 434 and before*
b *Axle SN G.ITA.702 435 and up*

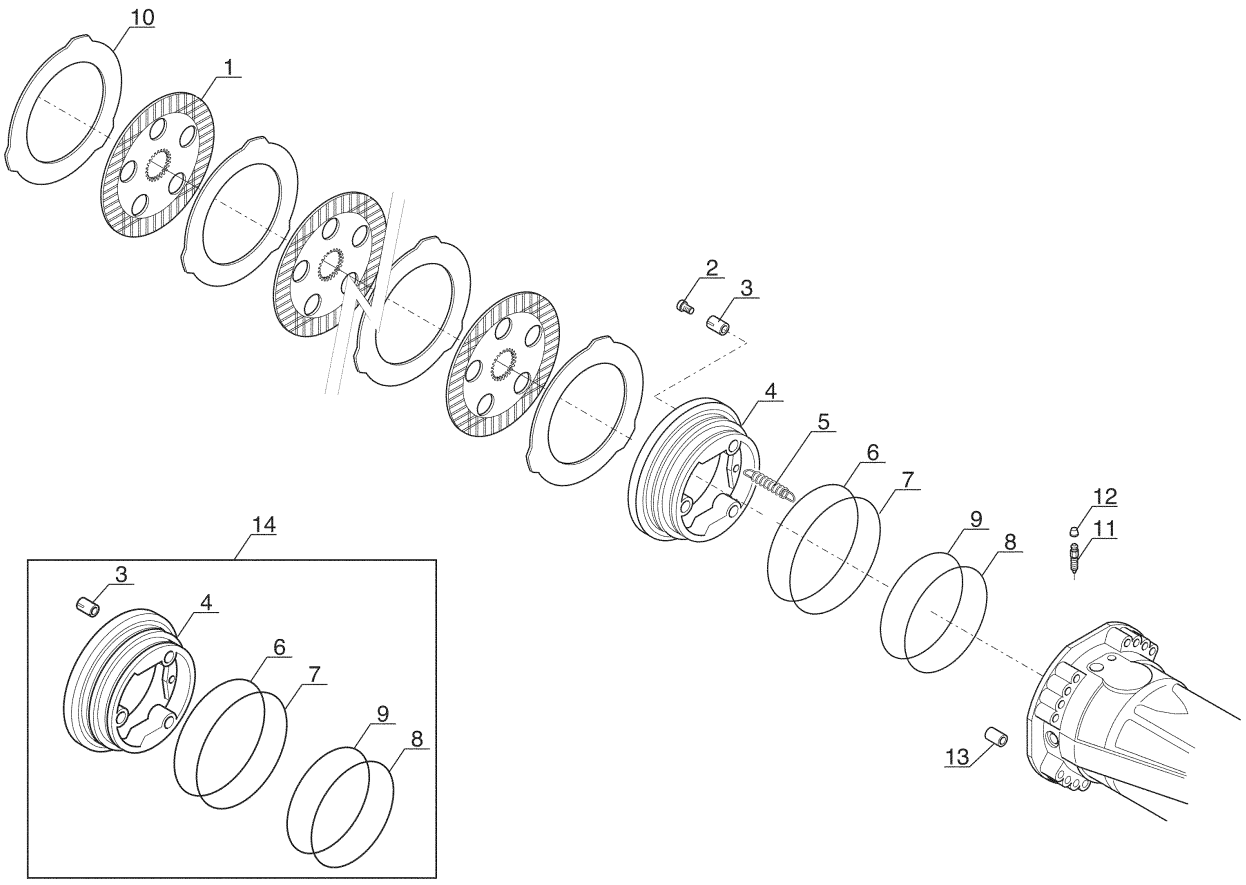

AX 1483

Ref. No.	Part No.	Description	Qty. Req.
01	219364	Brake disc	8
02	215160	Adjusting bolt	6
03	219682	Spring	6
04	219501	Piston *(sold only as kit; item #14)*	2
05	219365	Spring	6
06	219366	Anti-extrusion seal	2
07	219367	O-ring	2
08	219368	Anti-extrusion seal	2
09	219369	O-ring	2
10	219370	Intermediate disc	10
11	218261	Bleeder bolt	2
12	218270	Plug	2
13	218269	Centering pin	2
14	219501	Piston Kit	2

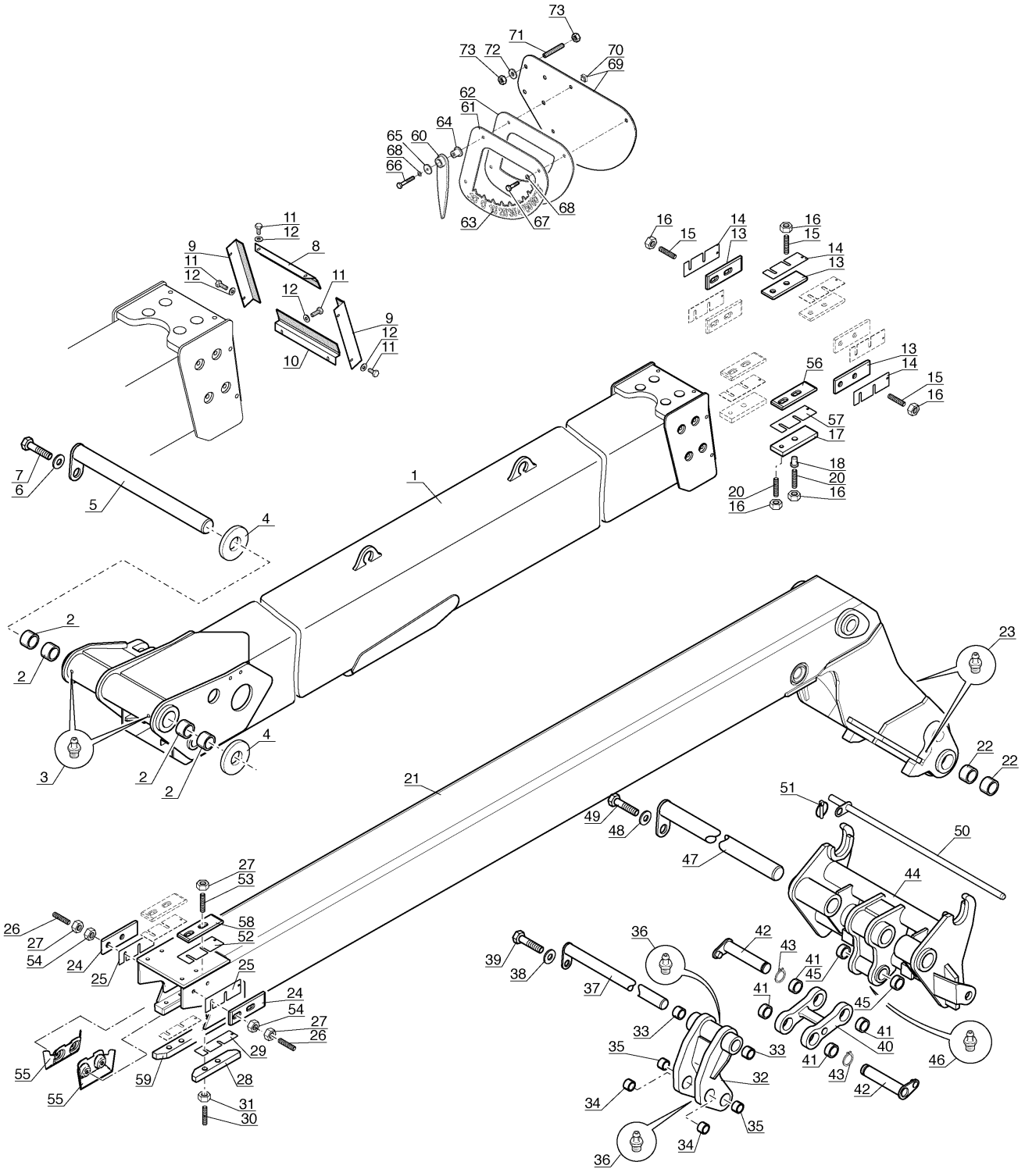

5 BA 443

Ref. No.	Part No.	Description	Qty. Req.
01	218865	Outer Boom with bushing	1
02	218496	Bushing	4
03	218320	Straight grease zerk	2
04	217905	Washer, 67x100x2	AR
	217906	Washer, 67x100x3	AR
05	218568	Articulating pin	1
06	219906	Washer, 21x50x6	1
07	219631	Bolt.	1
08	217960	Upper flap	1
09	217966	Side flap.	2
10	217793	Lower flap	1
11	219159	Bolt.	8
12	218379	Washer, M6	8
13	218558	Slide block	6
14	217937	Shim, 65X200X1 mm	AR
	217938	Shim, 65x200x2 mm.	AR
	217939	Shim, 65x200x4 mm.	AR
	215970	Shim, 65x200x0.5 mm	AR
15	217941	Set Screw, M12-40	AR
	217959	Set Screw, M12-45	AR
	217962	Set Screw, M12-60	AR
	217980	Set Screw, M12-50	AR
16	218319	Nut, M12	16
17	218483	Shim.	2
18	218452	Bushing	2
20	217962	Bolt, M12-60-33 H	2
	217994	Bolt, M12-65-33 H	2
21	218046	Inner telescope with bushing	1
22	218514	Bushing	4
23	218320	Straight grease zerk	2
24	218558	Slide block	2
25	218016	Shim, 54x216x0.5 mm	AR
	218017	Shim, 54x216x1 mm.	AR
	218018	Shim, 54x216x2 mm.	AR
26	217941	Set Screw, M12-40	AR
	217959	Set Screw, M12-45	AR
	217980	Set Screw, M12-50	AR
27	218319	Nut, M12	AR
28	215972	Slide block, L.H.	1
29	217965	Shim, 50x200x1 mm.	AR
	217967	Shim, 50x200x2 mm.	AR
	217968	Shim, 50x200x4 mm.	AR
	217674	Shim, 50x200x0.5 mm	AR
30	217941	Set Screw, M12-40-33HZN8.	AR
31	218319	Nut, M12	4
32	218045	Rod with bushing	1
33	217995	Bushing	2
34	217964	Bushing	2
35	217996	Bushing	2
36	218320	Straight grease zerk	2
37	215974	Articulating pin	1
38	219067	Washer	1
39	219699	Bolt.	1
40	215975	Rod with bushing	1
41	217964	Bushing	4
42	217998	Articulating pin	2
43	217956	Snap ring	2
44	218001	Carrier	1
45	217974	Bushing	2
46	218320	Straight grease zerk	1
47	218568	Articulating pin	1
48	219906	Washer	1
49	219631	Bolt, M18-40 8.8	1
50	218547	Spindle	1
51	219038	Pin	1
52	217987	Shim, 75X250X1 mm	AR
	217988	Shim, 75X250X2 mm	AR
	216300	Shim, 75X250X0.5 mm.	AR
	216258	Shim, 75X250X4 mm	AR
53	217959	Set Screw, M12-45-33H-ZN8	AR
	217962	Set Screw, M12-60-33H-ZN8	AR
	217980	Set Screw, M12-50-33H-ZN8	AR
54	219157	Nut, M12	4
55	218946	Protection plate	2
56	218559	Side Block	2
57	217987	Shim, 75X250X1 mm	AR
	217988	Shim, 75X250X2 mm	AR
	216300	Shim, 75X250X0.5 mm.	AR
	216258	Shim, 75X250X4 mm	AR
58	218559	Slide block	2
59	215972	Slide block, R.H.	1
60	217681	Pendulum.	1
61	217685	Level Indicator Plate	1
62	217683	Level Indicator Plate w/notches.	1
63	217684	Decal	1
64	217682	Bushing	1
65	219061	Washer	1
66	219861	Bolt, M8-40	1
67	219184	Bolt, M8-16	2
68	219054	Washer, M8	3
69	215978	Bracket.	1
70	217687	Nut, M8	3
71	217980	Set Screw, M12-50	6
72	219856	Washer, M12	2
73	218319	Nut, M12	AR

Work Lights (Option) - Early Style

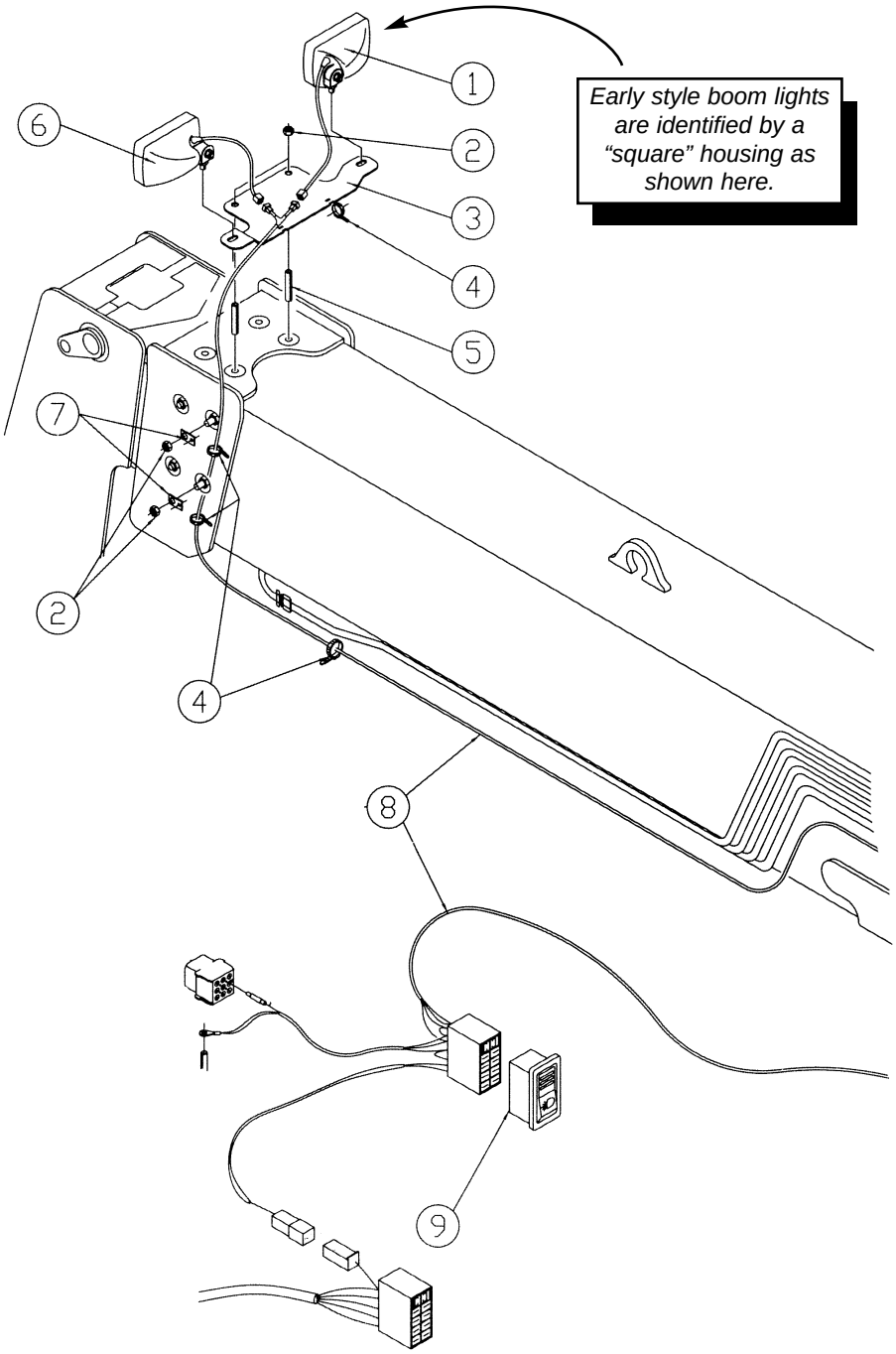

Ref. No.	Part No.	Description	Qty. Req.	Ref. No.	Part No.	Description	Qty. Req.
01	217800	Work Light	1	06	217801	Work Light	1
02	218319	Nut, M12-8	4	07	217009	Bracket	2
03	215774	Bracket	1	08	215768	Wire Harness, Boom Lights	1
04	215851	Clamp	32	09	215767	Switch	1
05	217994	Bolt, M12-65	2				

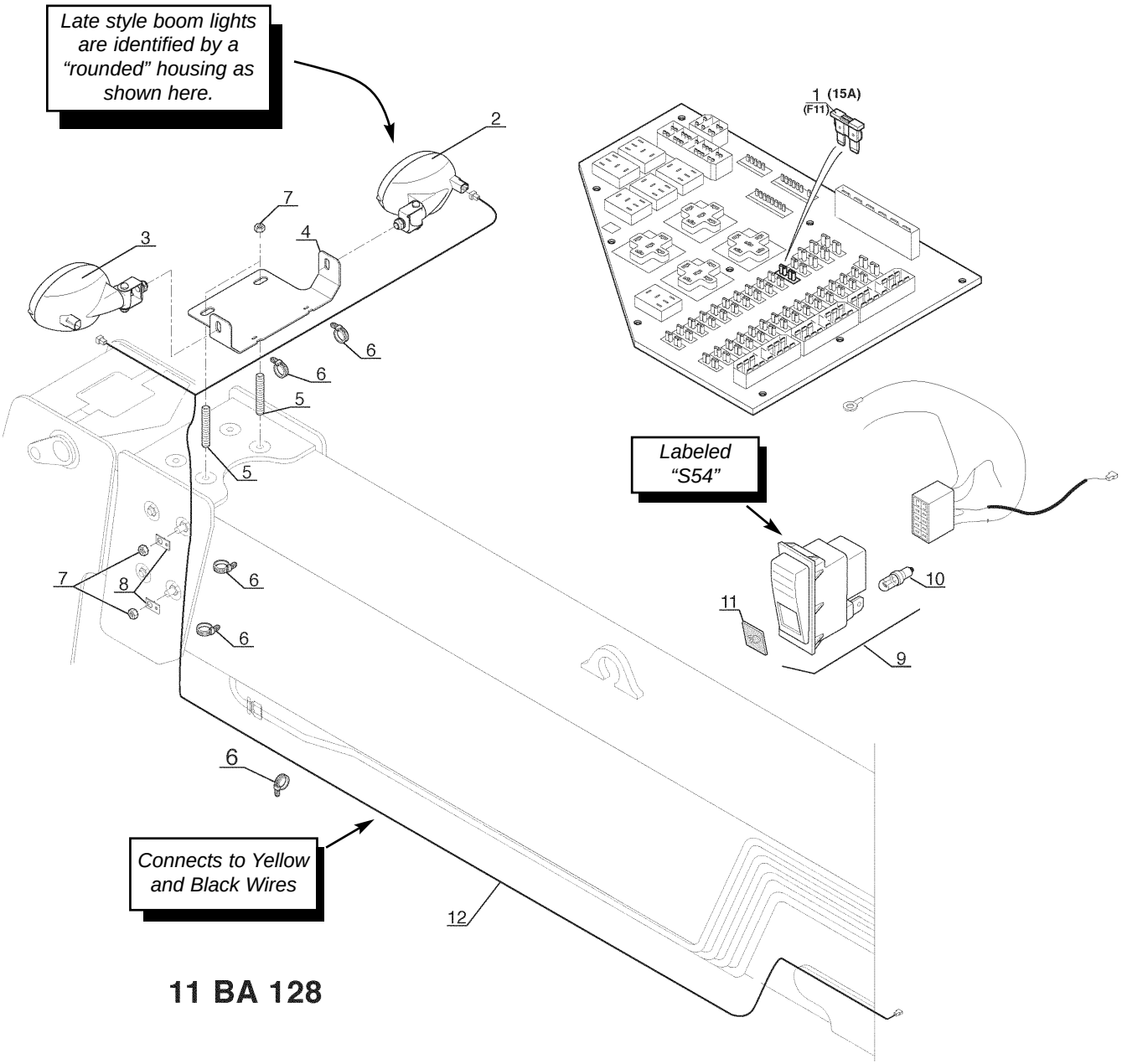

Ref. No.	Part No.	Description	Qty. Req.
01	219952	Fuse (15A)	1
02	215198	Work Light	1
03	215203	Work Light	1
04	215097	Work Light Bracket	1
05	217994	Bolt, M12x65	2
06	215851	Clamp	32
07	218319	Nut, M12	4
08	217009	Bracket	2
09	215767	Switch	1
10	217924	Bulb	1
11	215094	Lens	1
12	215096	Wire Harness, Boom Lights	1

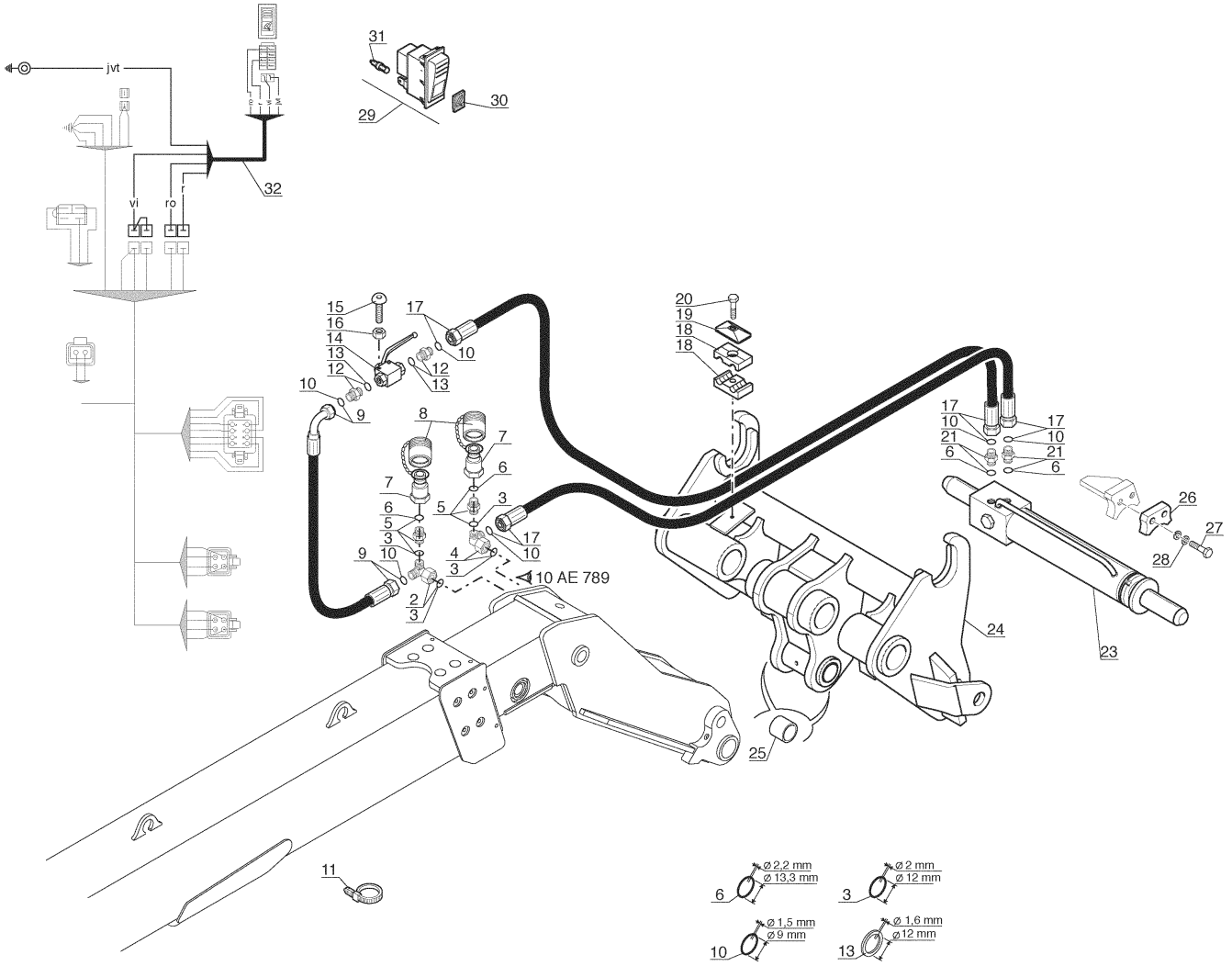

jvt
vi
ro
r
31
30
29
32
15
16
14
13
12
17
10
12
13
10
9
8
7
6
7
6
5
3
5
3
10
9
4
3
17
10
10 AE 789
2
3
20
19
18
18
17
10
21
6
17
10
21
6
26
27
28
24
23
25
11
ø 2,2 mm
ø 13,3 mm
6
ø 2 mm
ø 12 mm
3
ø 1,5 mm
ø 9 mm
10
ø 1,6 mm
ø 12 mm
13

10 AF 601

Ref. No.	Part No.	Description	Qty. Req.
02	218014	Adapter	1
03	217942	O-ring	AR
04	215873	Adapter	1
05	215281	Adapter	2
06	217920	O-ring	AR
07[a]	215291	Quick Male Connection	2
08	215280	Quick Coupler Cover	2
09	219943	Hose (330 mm long)	1
10	217947	O-ring	AR
11	219790	Clamp	1
12	217103	Adapter	2
13	217929	Seal	AR
14	217106	Valve	1
15	215279	Bolt, M5-45	2
16	219168	Nut, M5	2
17	215872	Hose	2
18	218363	Half Clamp	2
19	218361	Plate	1
20	219861	Bolt, M8-40	1
21	218356	Adapter	2
23	215416	Cylinder	1
24	215871	Carrier	1
25	217974	Bushing	2
26	217111	Stop	1
27	217112	Bolt	2
28	219050	Washer	2
29	215870	Switch	1
30	215869	Lens	1
31	217924	Bulb	1
32	215278	Wire Harness	1

a Some machines are equipped with a male coupler PN 215291 and a female coupler PN 215290.

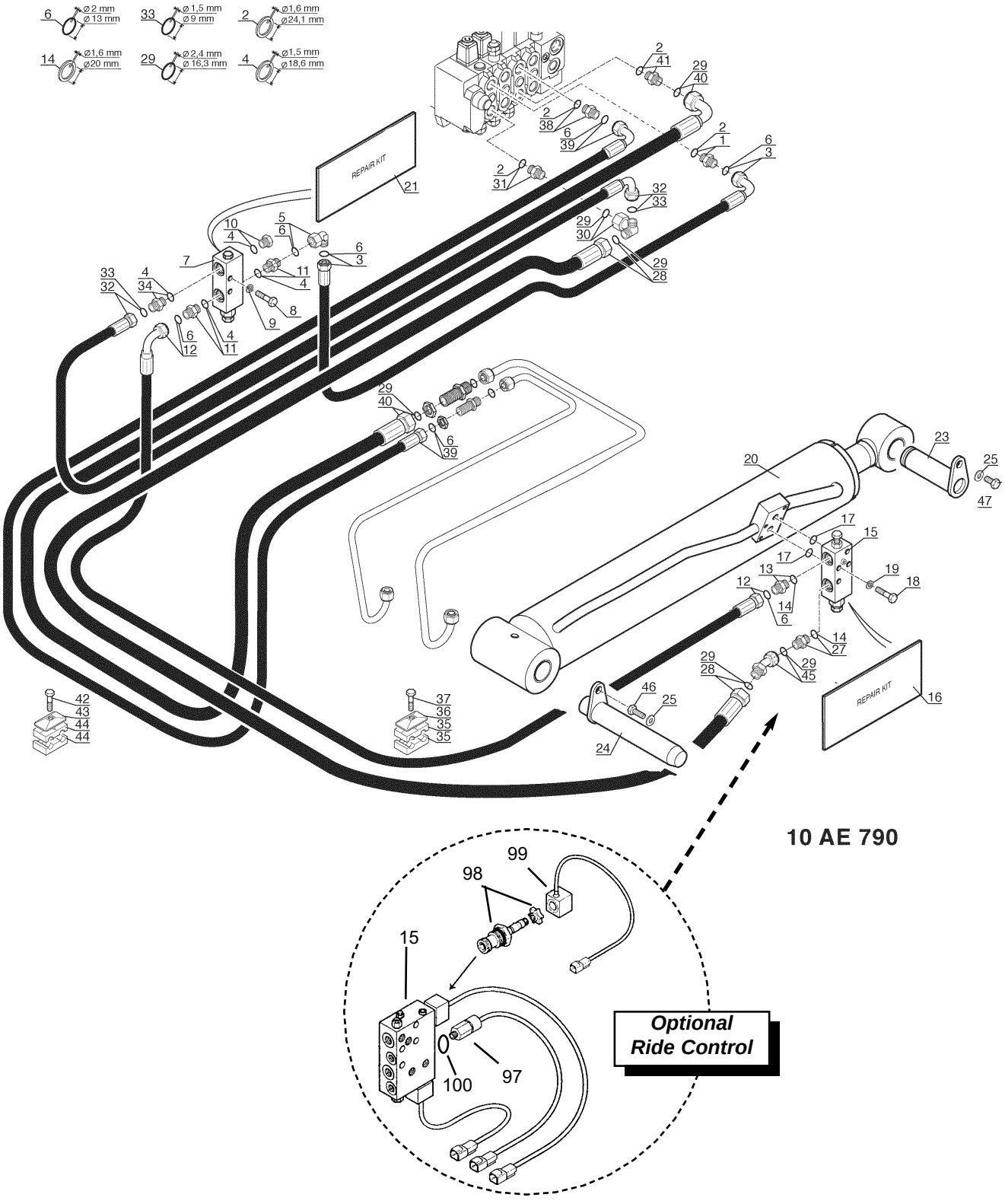
6 Ø2 mm Ø13 mm
33 Ø1,5 mm Ø9 mm
2 Ø1,6 mm Ø24,1 mm
14 Ø1,6 mm Ø20 mm
29 Ø2,4 mm Ø16,3 mm
4 Ø1,5 mm Ø18,6 mm
REPAIR KIT
21
REPAIR KIT
16
10 AE 790
99
98
15
100
97
Optional Ride Control

Ref. No.	Part No.	Description	Qty. Req.
01	217952	Adapter	1
02	217950	Seal	AR
03	218068	Hose	1
04	217933	O-ring	AR
05	218464	Adapter	1
06	215294	Seal	AR
07	218025	Valve	1
08	219618	Bolt	2
09	219054	Washer	2
10	218455	Plug	1
11	219148	Adapter	1
12	217792	Hose	1
13	219149	Adapter	1
14	217930	Seal	AR
15		Valve	1
	219957	*(Standard)*	
	215647	*(With Optional Ride Control)(Note b)*	
16	219984	Repair kit	1
17	218440	O-ring	2
18	219618	Bolt	4
19	219054	Washer	4
20	218905	Lift cylinder	1
21	215289	Seal Kit	1
23	218713	Pin	1
24	218822	Pin	1
25	219067	Washer	2
27	218441	Adapter	1
28	218079	Hose	1
29	217909	O-ring	AR
30	218013	Adapter	1
31	218091	Adapter	1
32	218073	Hose	1
33	217947	O-ring	AR
34	218450	Adapter	1
35	218811	Half-clamp	2
36	218365	Protection plate	1
37	219618	Bolt	1
38	217952	Adapter	1
39	215288	Hose *(1700 mm long)*	1
40	215287	Hose *(1720 mm long)*	1
41	218091	Adapter	1
42	219617	Bolt, M8-45	1
43	218365	Protection Plate	2
44	218811	Clamp	4
45	218790	Adapter	1
46	219007	Bolt, M10-16	1
47	219699	Bolt, M10-16	1
97[a]	215648	Low-Pressure Sensor/Switch	1
	106320	Seal	1
98[a]	215562	Electro valve	2
99[a]	215561	Solenoid	2
100	106320	Seal Bushing	1

a *When equipped with optional ride control.*

b *Includes items 98 and 99.*

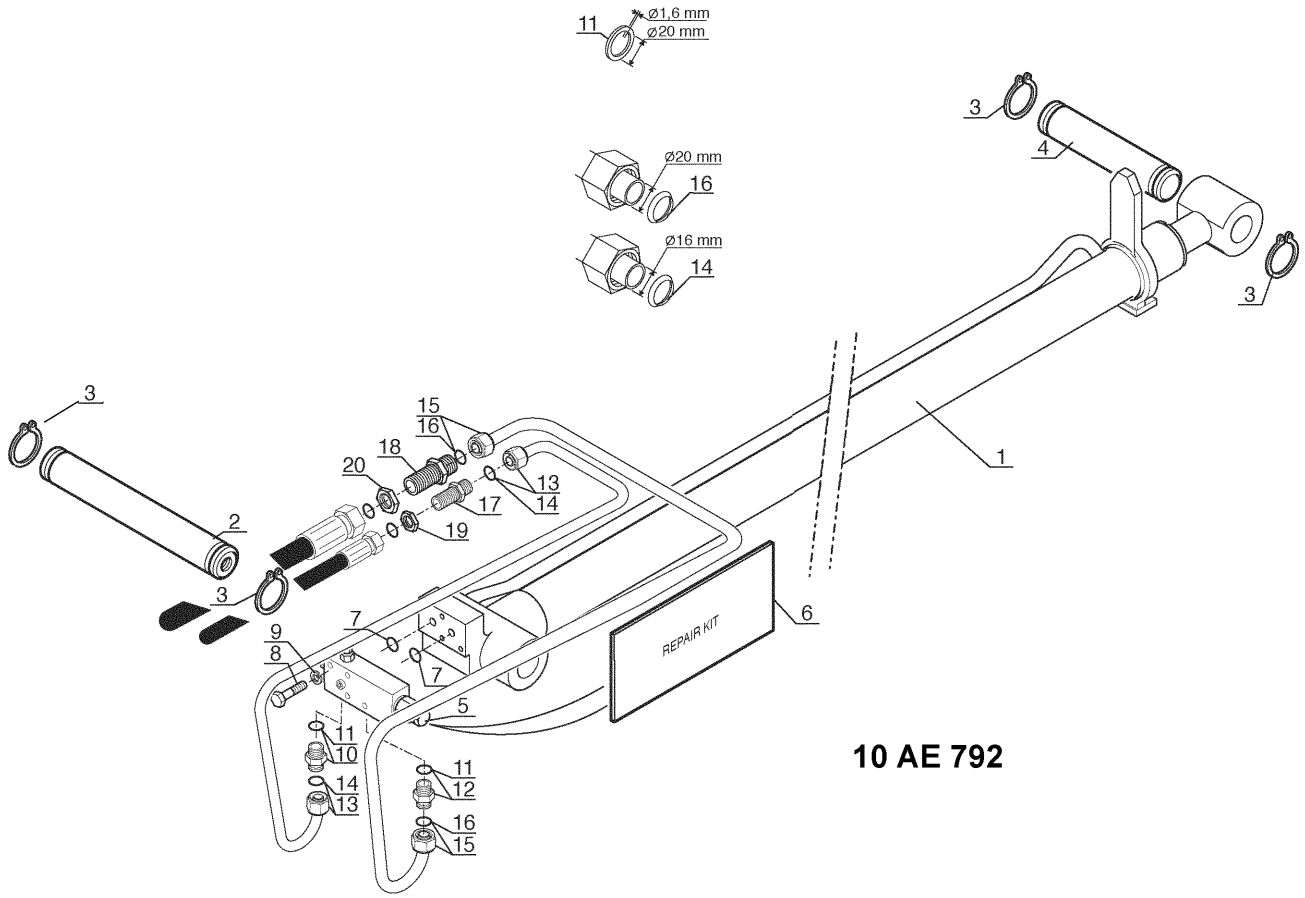
11
Ø1,6 mm
Ø20 mm
Ø20 mm
16
Ø16 mm
14
3
4
3
1
3
2
3
15
16
18
20
13
14
17
19
6
REPAIR KIT
9
8
7
7
5
11
10
14
13
11
12
16
15
10 AE 792

Ref. No.	Part No.	Description	Qty. Req.
01	*Note a*	Extend Cylinder	1
02	215283	Pin, Extend Cyl. Base End	1
03	219024	Snap ring	4
04	215282	Pin, Extend Cyl. Rod End	1
05	219961	Valve	1
06	219988	Repair Kit	1
07	218440	O-Ring	2
08	219618	Bolt, M8-50	4
09	219054	Washer, W8	4
10	219149	Adapter	1
11	217930	Seal	AR
12	218441	Adapter	1
13	215286	Hydraulic Tube	1
14	217921	Seal	AR
15	215285	Hydraulic Tube	1
16	217922	Seal	AR
17	218871	Adapter	1
18	218873	Adapter	1
19	219043	Nut	1
20	218872	Nut	1

a *Refer to the Hydraulic Components section for cylinder information.*

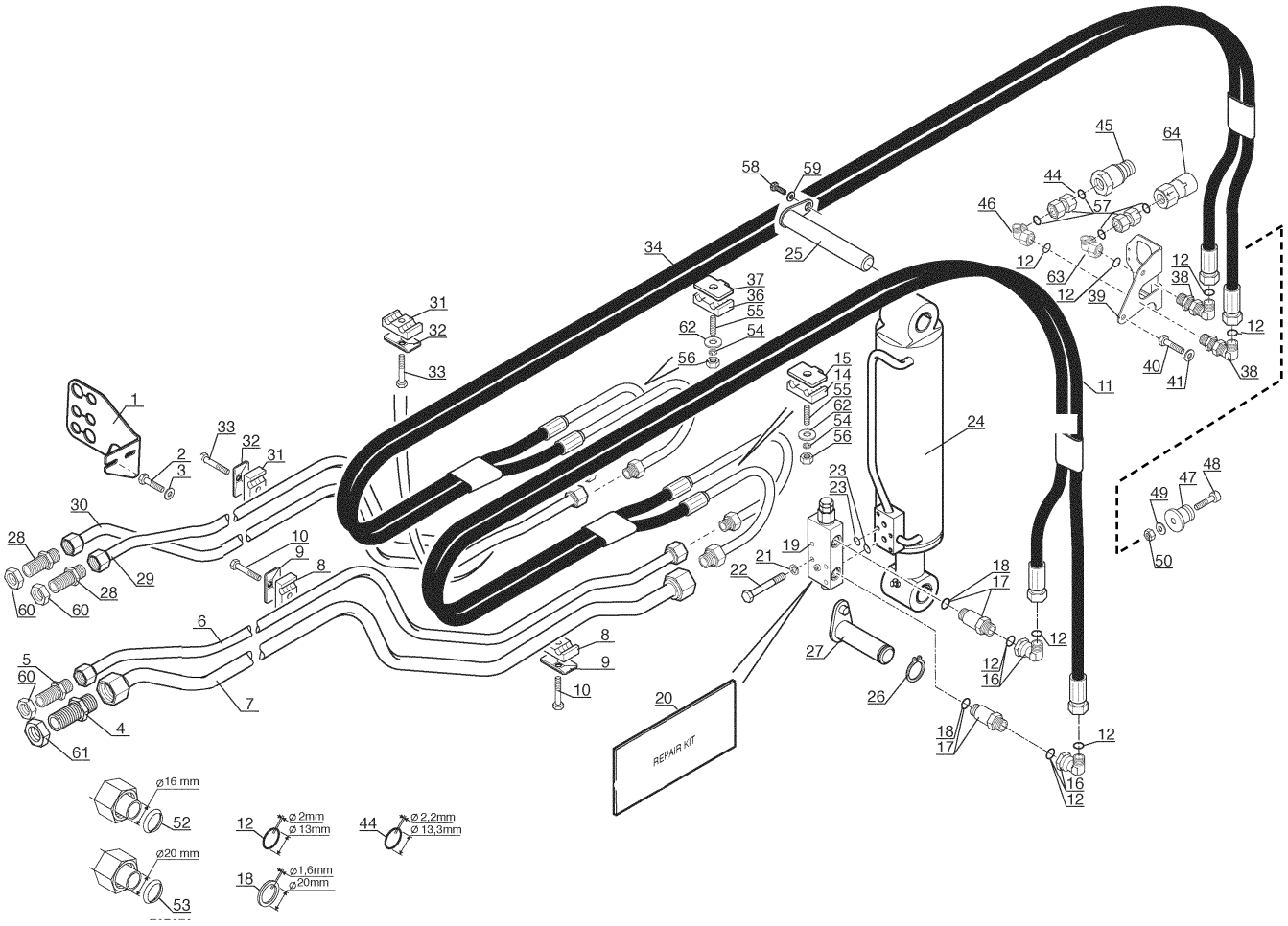
REPAIR KIT
ø16 mm
52
ø20 mm
53
12 ø 2mm ø 13mm
18 ø1,6mm ø20mm
44 ø 2,2mm ø 13,3mm

10 AE 789

Ref. No.	Part No.	Description	Qty. Req.
01	215295	Bracket	1
02	219055	Bolt	2
03	218510	Washer	2
04	218873	Adapter	1
05	218871	Adapter	1
06	218882	Tube	1
07	218881	Tube	1
08	218380	Half-clamp	2
09	218365	Protection plate	2
10	219852	Bolt	2
11	215100	Hose	1
12	215294	O-ring	AR
14	218363	Half-clamp	1
15	218733	Fastening plate	1
16	218464	Adapter	2
17	217977	Adapter	2
18	217930	Seal	AR
19	219957	Balancing valve	1
20	219984	Repair kit	AR
21	219054	Washer	4
22	219618	Bolt	4
23	218440	O-ring	2
24	*Note a*	Tilt cylinder	1
25	215293	Pin	1
26	217956	Snap ring	1
27	218000	Articulating pin	1
28	218871	Adapter	2
29	218880	Tube	1
30	218879	Tube	1
31	218363	Half-clamp	2
32	218361	Protection plate	2
33	219872	Bolt	2
34	218888	Hose	1
36	218363	Half-clamp	1
37	218733	Fastening plate	1
38	219046	Adapter	2
39	215292	Bracket	1
40	215309	Bolt, M8-10	2
41	218510	Washer, M8	2
44	217920	O-Ring	AR
45	215291	Quick Connector *(male)*	1
46	215873	Adapter	1
47	215873	Plug	2
48	217361	Bolt, M8-35	2
49	218510	Washer, M8	2
50	219616	Nut, M8	2
52	217921	Seal	AR
53	217922	Seal	AR
54	219054	Washer	2
55	218340	Bolt	2
56	219616	Nut	2
57	218022	Adapter	2
58	219699	Bolt	1
59	219067	Washer	1
60	219043	Nut	3
61	218872	Nut	1
62	218510	Washer	2
63	218014	Adapter	1
64	215290	Quick Coupler *(female)*	1

a *Refer to the Hydraulic Components section for information regarding the tilt cylinder.*

NOTE: *A conversion kit is also available to change the fittings from metric to SAE; 820280 Adapter Kit consists of (2) 103589 adapters, (1) L71686 and (1) L71687 flat face coupler.*

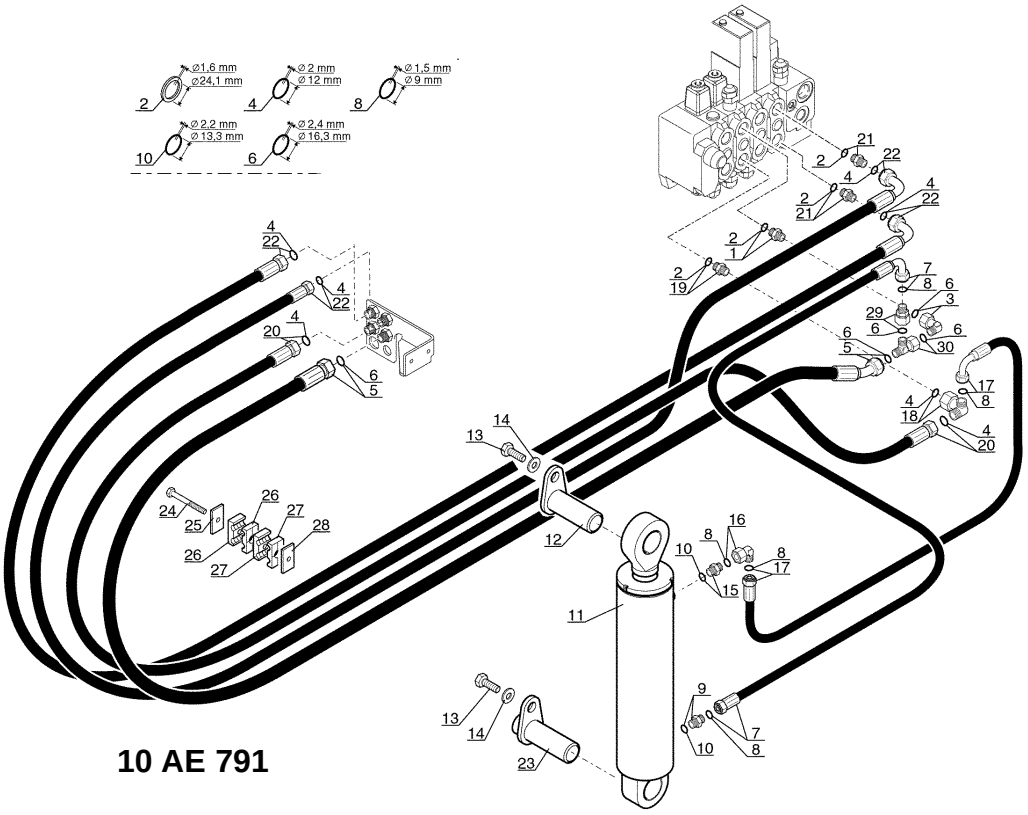
Ø1,6 mm
Ø24,1 mm
Ø 2 mm
Ø 12 mm
Ø1,5 mm
Ø 9 mm
Ø 2,2 mm
Ø 13,3 mm
Ø 2,4 mm
Ø 16,3 mm

10 AE 791

Ref. No.	Part No.	Description	Qty. Req.
01	218091	Adapter	1
02	217950	Seal	AR
03	218552	Adapter	1
04	217942	O-ring	AR
05	218081	Hose	1
06	217909	O-ring	AR
07	218072	Hose	1
08	217947	O-ring	AR
09	218356	Adapter	1
10	217920	O-ring	AR
11	*Note a*	Slave cylinder	1
12	218515	Articulating pin	1
13	219699	Bolt	2
14	219067	Washer	2
15	218356	Adapter	1
16	218473	Adapter	1
17	218080	Hose *(880 mm long)*	1
18	218014	Adapter	1
19	217952	Adapter	1
20	218074	Hose *(1450 mm long)*	1
21	217952	Adapter	2
22	218070	Hose *(1620 mm long)*	2
23	218754	Articulating pin	1
24	215284	Bolt, M8-130	1
25	218365	Protection plate	1
26	218372	Half-clamp	2
27	218811	Half-clamp	2
28	218825	Protection plate	1
29	219913	Adapter	1
30	218640	Adapter	1

a *Refer to the Hydraulic Components section for cylinder information.*

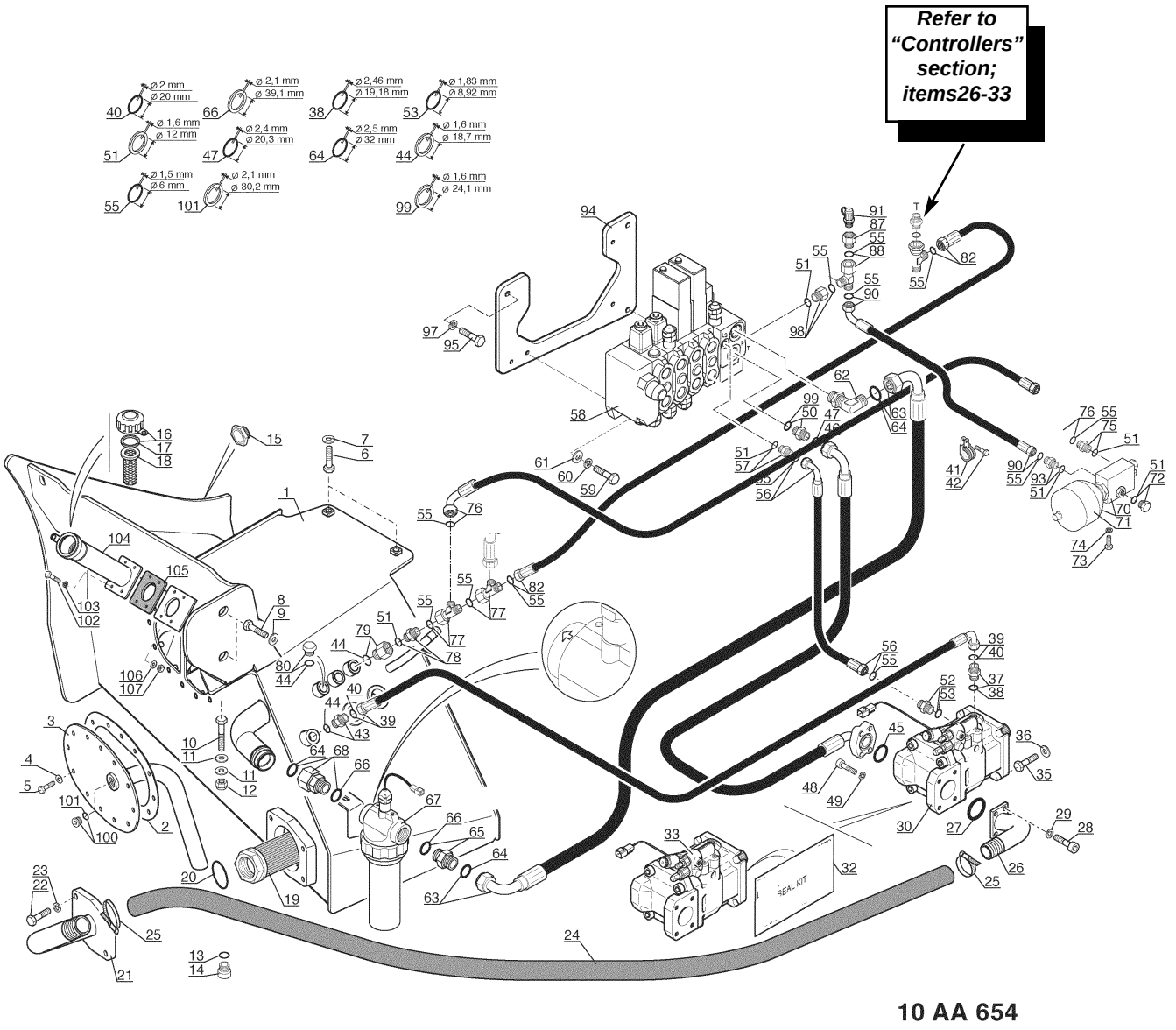
Refer to "Controllers" section; items26-33
Ø 2 mm
Ø 20 mm
Ø 2,1 mm
Ø 39,1 mm
Ø 2,46 mm
Ø 19,18 mm
Ø 1,83 mm
Ø 8,92 mm
Ø 1,6 mm
Ø 12 mm
Ø 2,4 mm
Ø 20,3 mm
Ø 2,5 mm
Ø 32 mm
Ø 1,6 mm
Ø 18,7 mm
Ø 1,5 mm
Ø 6 mm
Ø 2,1 mm
Ø 30,2 mm
Ø 1,6 mm
Ø 24,1 mm
SEAL KIT
10 AA 654

Ref. No.	Part No.	Description	Qty. Req.
01	218061	Hydraulic tank	1
02	218729	Seal	1
03	218026	Cover	1
04	218510	Washer	12
05	219610	Bolt	12
06	219623	Bolt	2
07	219918	Washer	2
08	219870	Bolt	2
09	219918	Washer	2
10	219626	Bolt	1
11	219918	Washer	2
12	219063	Nut	1
13	218437	Seal	2
14	218436	Drain plug	2
15	219151	Gauge	1
16	219937	Cap	1
17	218265	Seal	1
18	219864	Filter	1
19	219945	Primary circuit strainer	1
20	218644	O-ring	1
21	215313	Flange / Hydraulic Tank	1
22	219870	Bolt	4
23	219050	Washer	4
24	218646	Hose	1
25	218393	Clamp	2
26	218060	Delivery port adapter	1
27	219066	O-ring	1
28	218023	Bolt	4
29	217900	Washer	4
30	218059	Complete Pump	1
32	218252	Seal kit	1
33	218059	Complete Pump	1
35	218963	Bolt	2
36	219919	Washer	2
37	218503	Adapter	1
38	219152	O-ring	AR
39	218050	Hose	1
40	217944	O-ring	AR
41	218391	Clamp	1
42	219610	Bolt	1
43	216120	Adapter	1
44	217933	Seal	AR
45	217899	O-ring	1
46	106802	Hose	1
47	217949	O-ring	AR
48	217904	Bolt	4
49	219905	Washer	4
50	217958	Adapter	1
51	217929	Seal	AR
52	218010	Adapter	1
53	217907	O-ring	AR
55	217943	O-ring	AR
56	218065	Hose	1
57	218453	Adapter	1
58	215312	Main Hydraulic Valve *(complete)*	1
59	219868	Bolt	3
60	219051	Washer	3
61	219028	Washer	3
62	218011	Adapter	1
63	218012	Hose	1
64	217961	O-ring	AR
65	218643	Adapter	1
66	217951	Seal	AR
67	218083	Filter	1
68	218642	Adapter	1
70	218082	Complete hydraulic accumulator	1
71	218200	Hydraulic accumulator	1
72	217989	Plug	1
73	219055	Bolt	2
74	219054	Washer	2
75	218453	Adapter	1
76	217986	Hose	1
77	218443	Adapter	1
78	218453	Adapter	1
79	218095	Adapter	1
80	218455	Plug	1
82	218093	Hose	1
87	218097	Adapter	1
88	218443	Adapter	1
90	218064	Hose	1
91	219899	Pressure test	1
93	218453	Adapter	1
94	218049	Bracket	1
95	219621	Bolt	3
97	219051	Washer	3
98	218094	Adapter	1
99	217950	Seal	AR
100	217993	Plug	1
101	217948	Seal	AR
102	219620	Bolt	4
103	219051	Washer	4
104	218829	Tube	1
105	218830	Gasket	1
106	219028	Washer	4
107	219422	Nut	4

NOTE: *For testing pressures, order 215371 Test Hose and 215372 Adapter for Gauge.*

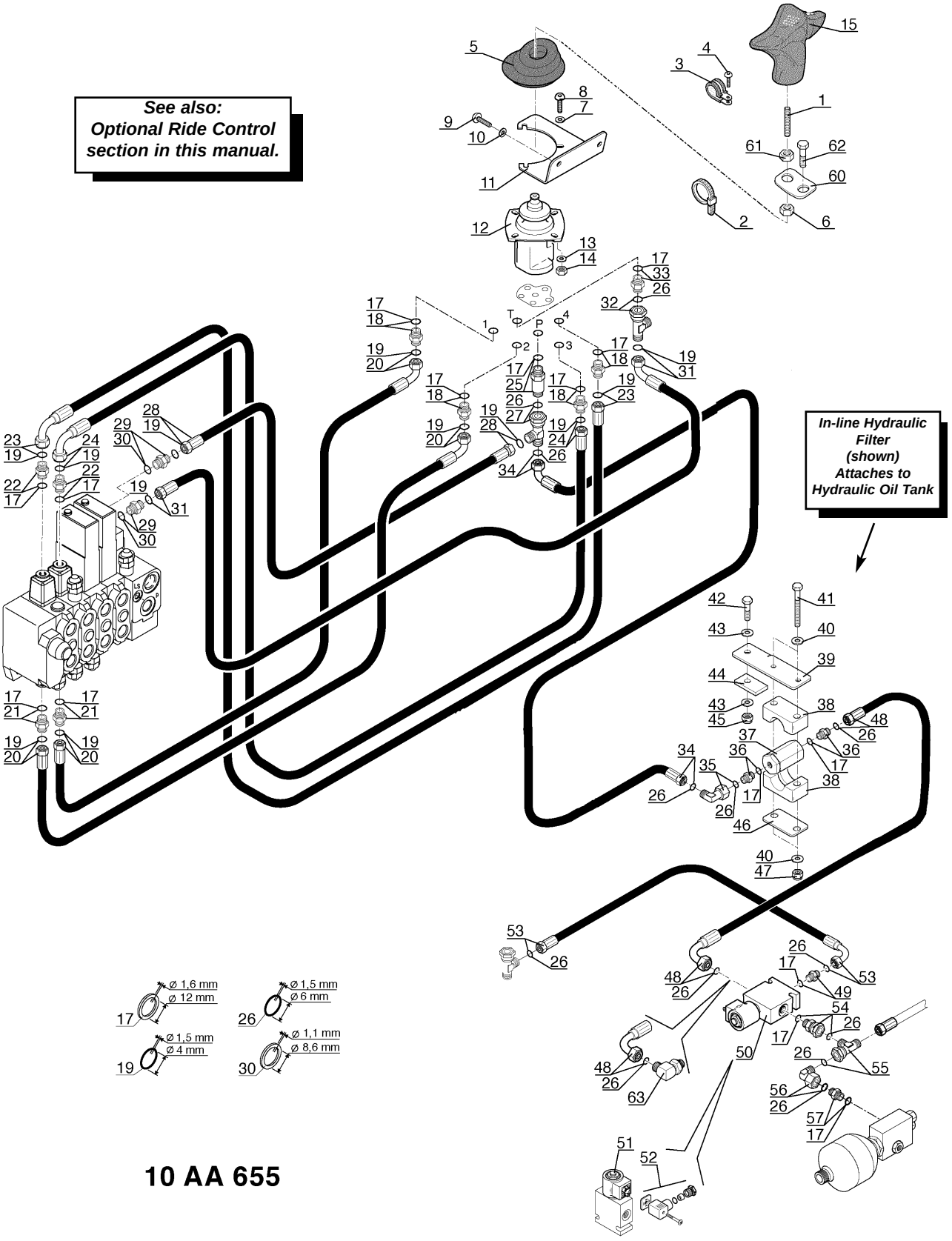
See also:
Optional Ride Control
section in this manual.
In-line Hydraulic
Filter
(shown)
Attaches to
Hydraulic Oil Tank
Ø 1,6 mm
Ø 12 mm
Ø 1,5 mm
Ø 4 mm
Ø 1,5 mm
Ø 6 mm
Ø 1,1 mm
Ø 8,6 mm

10 AA 655

Ref. No.	Part No.	Description	Qty. Req.
01	217980	Bolt, M12-50	1
02	218347	Clamp	3
03	217908	Clamp	1
04	219929	Bolt, M5-10	1
05	215311	Bellows	1
06	219157	Nut, M12	1
07	215789	Washer, M6	3
08	218507	Bolt, M6-20	3
09	218049	Bolt, M6-16	2
10	218439	Washer, M6	2
11	215297	Bracket.	1
12	218024	Joystick Control Valve	1
13	218439	Washer, M6	3
14	219022	Nut, M6	3
15	215310	Controller, Multifunction	1
17	217929	Seal.	AR
18	217992	Adapter	4
19	218092	O-ring	AR
20	218075	Hose *(850 mm long)*	2
21	217992	Adapter	2
22	217992	Adapter	2
23	218077	Hose *(950 mm long)*	1
24	218076	Hose *(900 mm long)*	1
25	217983	Adapter	1
26	217943	O-Ring	AR
27	218443	Adapter	1
28	218078	Hose *(550 mm long)*	1
29	218098	Adapter	2
30	217985	Seal.	AR
31	218053	Hose	1
32	218443	Adapter	1
33	218453	Adapter	1
34	215537	Hose *(980 mm long)*	1
35	219156	Adapter	1
36	218453	Adapter	2
37	215532	Filter, In-Line	1
38	215536	Clamp	2
39	215535	Filter Bracket	1
40	218439	Washer, M6	4
41	218350	Bolt, M6-80	2
42	219872	Bolt, M8-30	1
43	218510	Washer, M8	2
44	215534	Plate.	1
45	219169	Nut, M8	1
46	216665	Protection Plate	1
47	218344	Nut, M6	2
48	218065	Hose *(450 mm long)*	1
50	215309	Control Valve *(complete)*	1
51	215308	Solenoid, Electric.	1
52	215301	Connector, Electrical	1
53	215300	Hose *(520 mm long)*	1
54	218094	Adapter	1
55	218443	Adapter	1
56	219156	Adapter	1
57	218453	Adapter	1
60	215299	Bracket.	1
61	218319	Nut, M12	1
62	218341	Bolt, M12-16	1
63	215298	Adapter	1

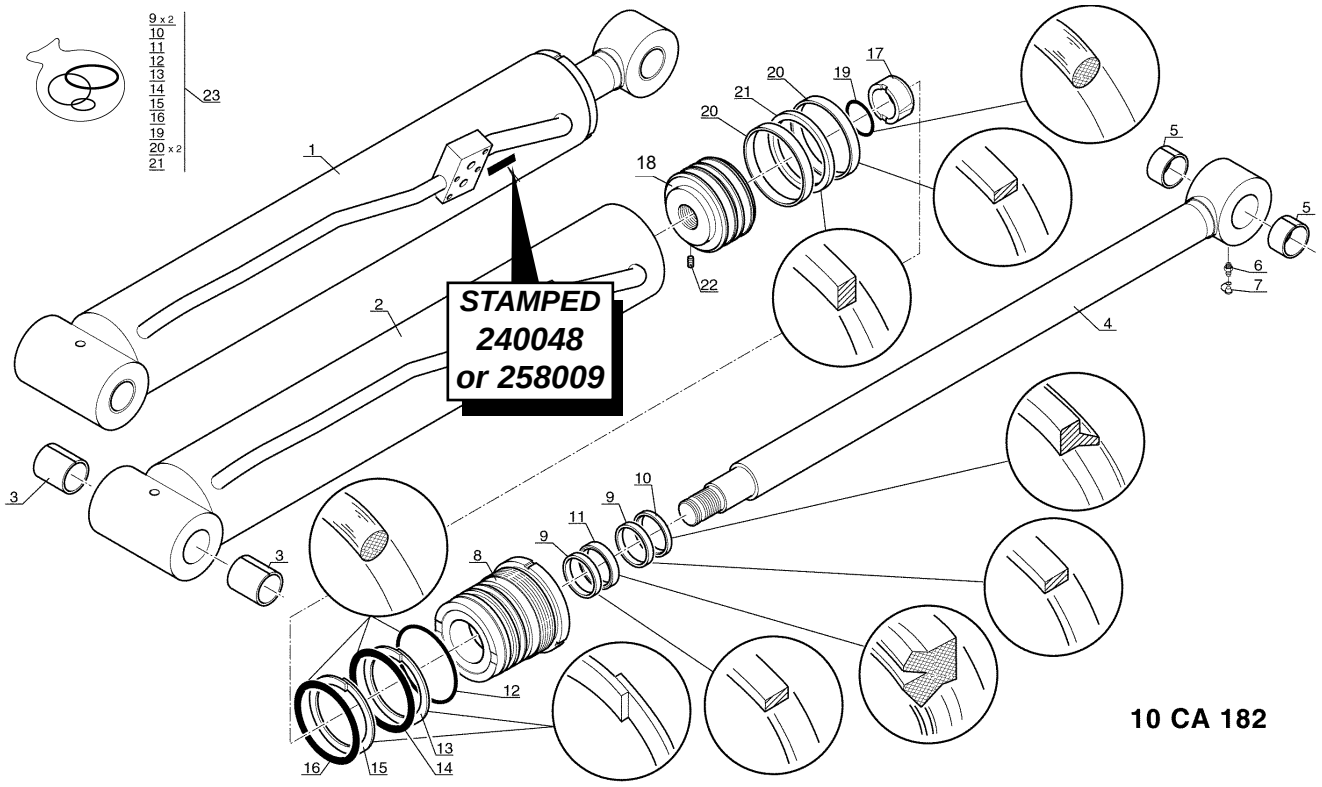

Ref. No.	Part No.	Description	Qty. Req.
01	218905	Lifting cylinder	1
02	NSS	Cylinder body	1
03	218538	Bushing	2
04	219396	Cylinder rod	1
05	219229	Bushing	2
06	218316	Grease zerk	1
07	218460	Cap	1
08	219395	Fastening ring	1
09	219272	Seal	2
10	219162	Seal	1
11	219161	Seal	1
12	218426	O-ring	1
13	219707	Anti-extrusion seal	1
14	219709	O-ring	1
15	219708	Anti-extrusion seal	1
16	219674	O-ring	1
17	219397	Bushing	1
18	219400	Cylinder piston	1
19	219044	O-ring	1
20	219398	Seal	2
21	219399	Seal	1
22	218484	Bolt	1
23	219978	Seal kit	1

NOTE: *Before ordering service parts, be sure to verify that the cylinder body is stamped 240 048 or 258 009 as shown in figure 10 CA 182, above.*

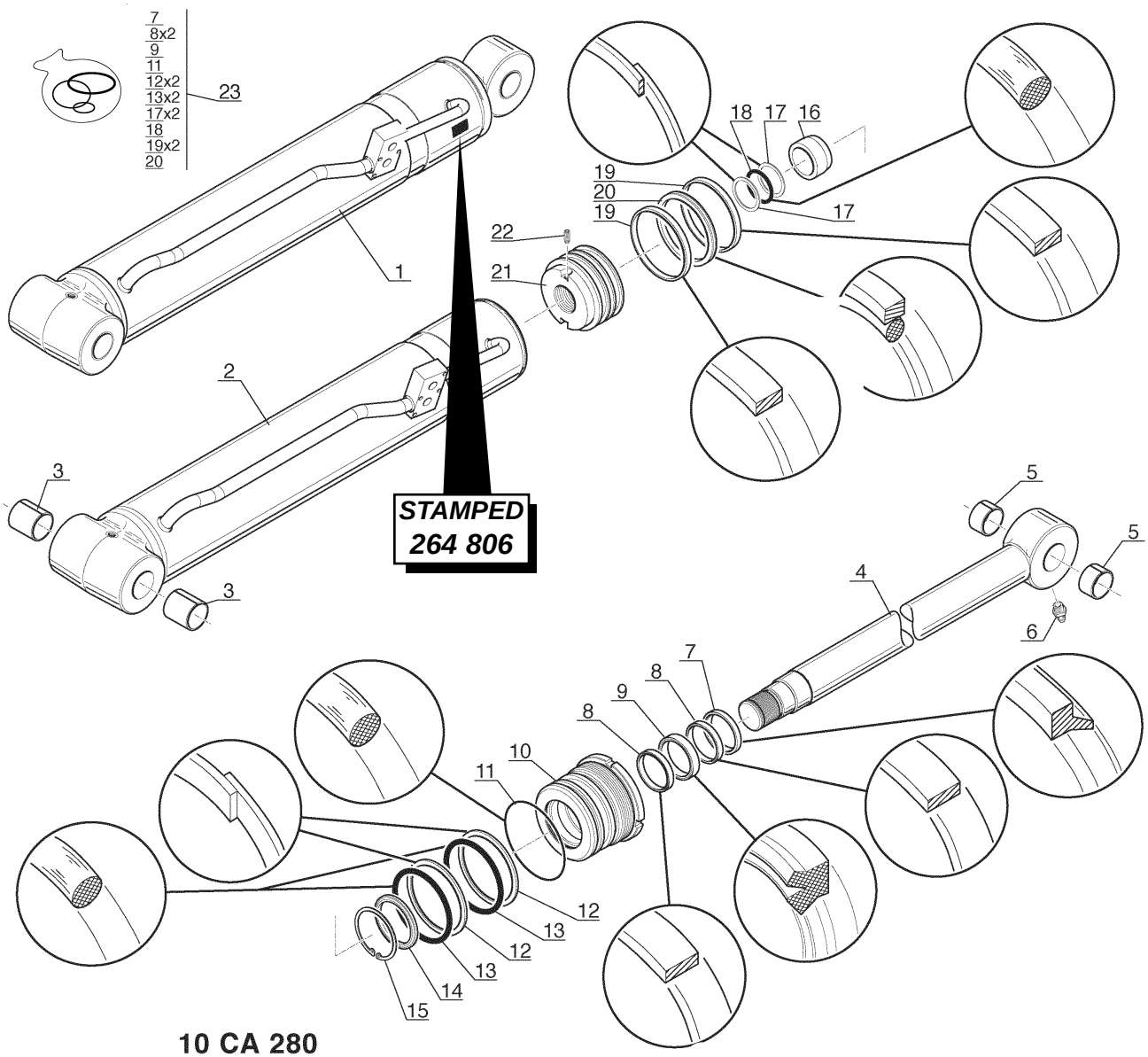

10 CA 280

Ref. No.	Part No.	Description	Qty. Req.
01	106811	Lifting cylinder	1
02	NSS	Cylinder body	1
03	218538	Bushing	2
04	215274	Cylinder rod	1
05	219229	Bushing	2
06	218316	Grease zerk	1
07	215272	Wiper Seal	1
08	215271	Seal	2
09	215270	Rod Seal	1
10	215269	Fastening Ring	1
11	215268	O-ring	1
12	215267	Anti-extrusion Seal	2
13	215266	O-ring	2
14	215265	Socket	1
15	215264	Packing Ring	1
16	215263	Socket	1
17	215262	Anti-extrusion seal	2
18	215261	O-ring	1
19	215260	Seal	1
20	215259	Seal	1
21	215258	Piston	1
22	215433	Screw	1
23	215257	Seal Kit	1

NOTE: *Before ordering service parts, be sure to verify that the cylinder body is stamped 264 806 as shown in figure 10CA280, above.*

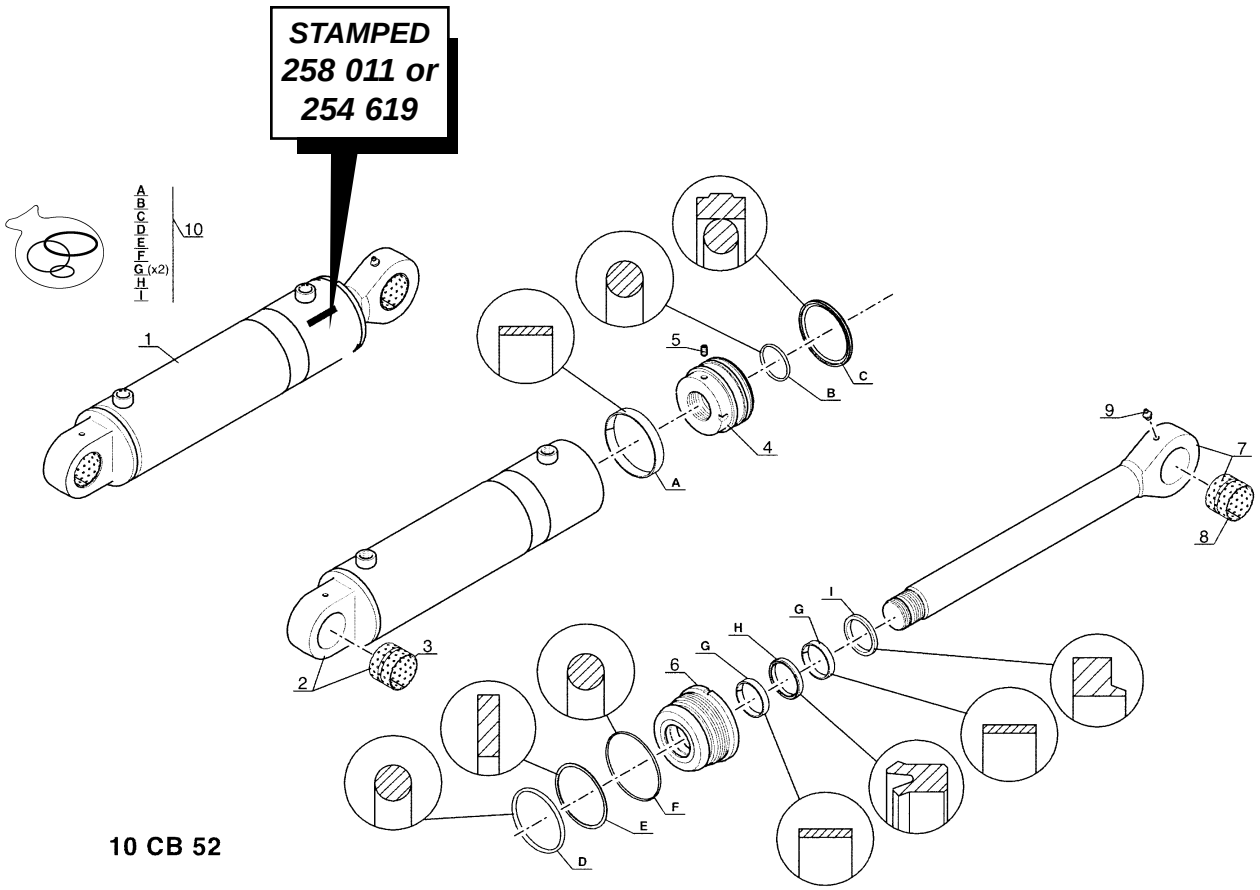

10 CB 52

Slave (Compensation) Cylinder

Ref. No.	Part No.	Description	Qty. Req.
01	215437	Slave Cylinder	1
02	215436	Cylinder body	1
03	218735	Bushing	1
04	215434	Piston	1
05	215433	Bolt	1
06	215432	Ring	1
07	215431	Cylinder rod	1
08	218735	Bushing	1
09	218316	Grease zerk	1
10	215429	Seal kit	1

NOTE: *Before ordering service parts, be sure to verify that the cylinder body is stamped 258 011 or 254 619 as shown in figure 10 CB 52, facing page.*

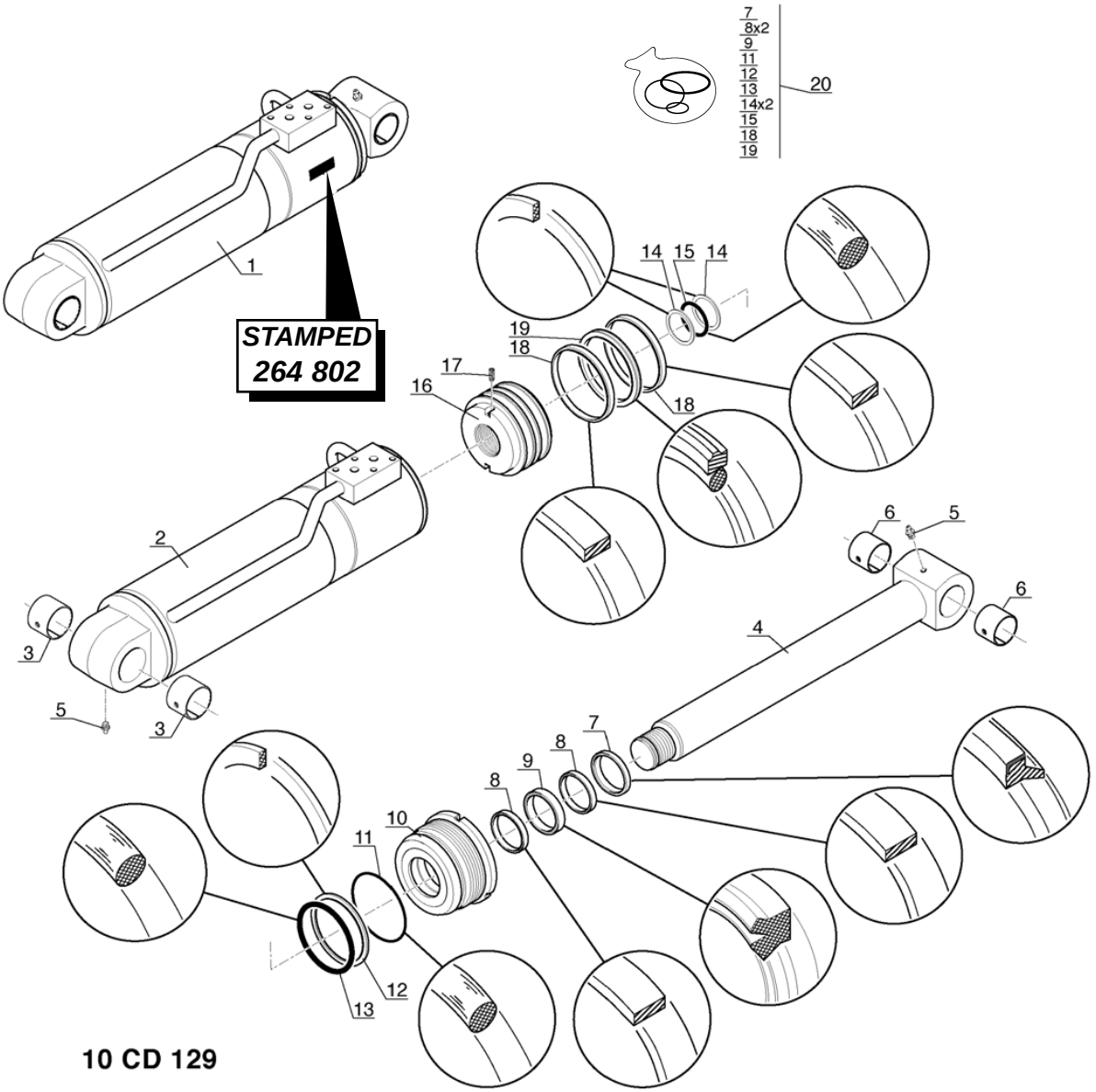

10 CD 129

Ref. No.	Part No.	Description	Qty. Req.
01	106812	Tilt Cylinder	1
02	NSS	Cylinder Housing	1
03	215061	Bushing	2
04	215060	Cylinder Rod	1
05	218316	Grease Zerk	2
06	217974	Bushing	2
07	NSS	Wiper Seal	1
08	NSS	Seal	2
09	NSS	Rod Seal	1
10	215059	End Gland	1
11	NSS	O-Ring	1
12	NSS	Seal	1
13	NSS	O-Ring	1
14	NSS	Seal	2
15	NSS	O-Ring	1
16	215058	Piston	1
17	215433	Bolt	1
18	NSS	Seal	2
19	NSS	Piston Seal	1
20	215062	Seal Kit *(Includes items 7-9, 11-15, 18 & 19)*	1

NOTE: *Before ordering service parts, be sure to verify that the cylinder body is stamped 264 802 as shown in figure 10 CD 129, above.*

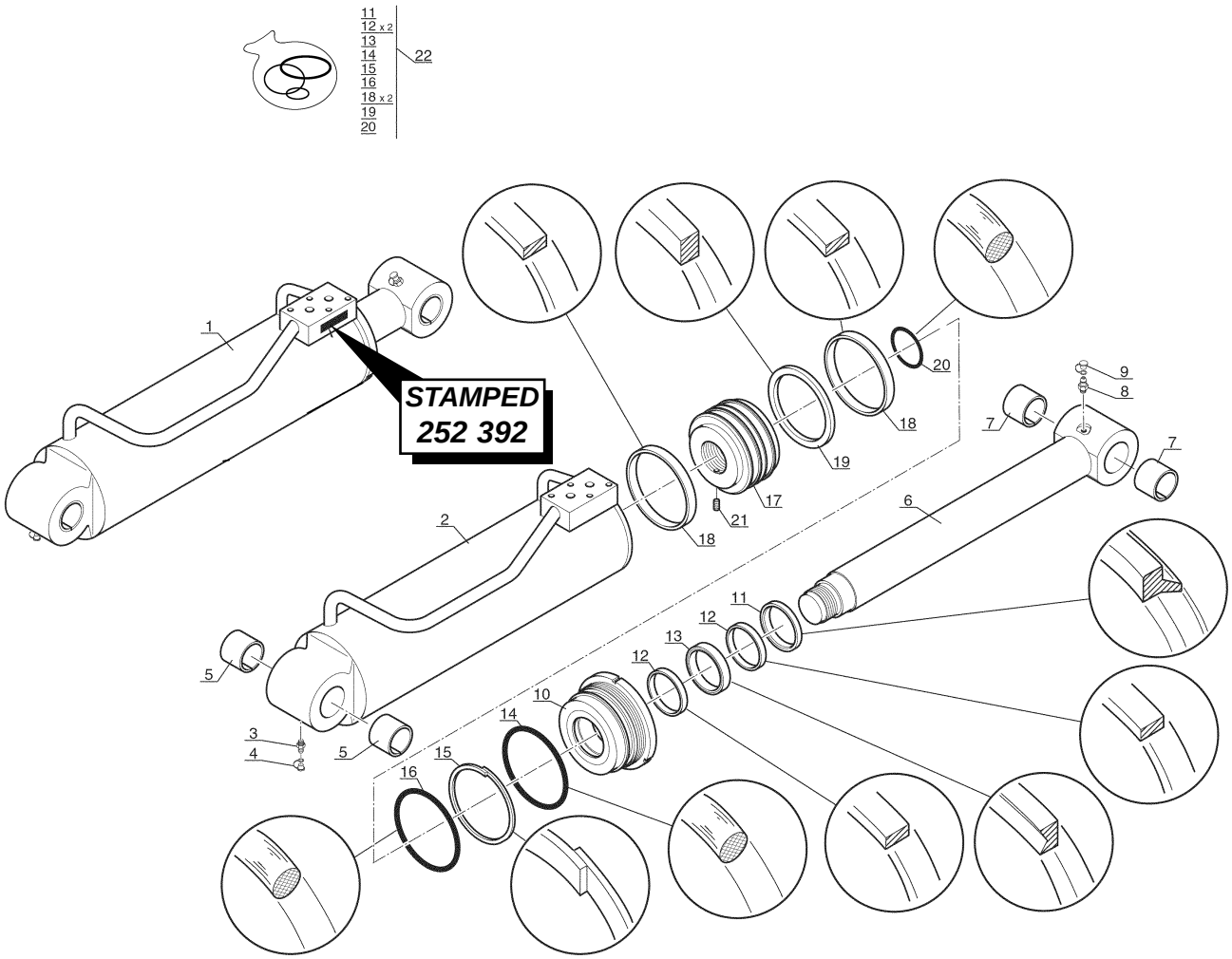

10 CD 98

Ref. No.	Part No.	Description	Qty. Req.
01	218048	Tilt Cylinder	1
02	218206	Cylinder body	1
03	218316	Grease zerk	1
04	218460	Cap	1
05	218735	Bushing	2
06	218143	Cylinder rod	1
07	219176	Bushing	2
08	218316	Grease zerk	1
09	218460	Cap	1
10	218207	Fastening ring	1
11	217963	Seal	1
12	217973	Seal	2
13	217971	Seal	1
14	217934	O-ring	1
15	218142	Anti-extrusion seal	1
16	218196	O-ring	1
17	218144	Cylinder piston	1
18	218208	Seal	2
19	218145	Seal	1
20	219044	O-ring	1
21	218484	Bolt	1
22	219990	Seal kit	1

NOTE: *Before ordering service parts, be sure to verify that the cylinder body is stamped 252 392 as shown in figure 10 CD 98, above.*

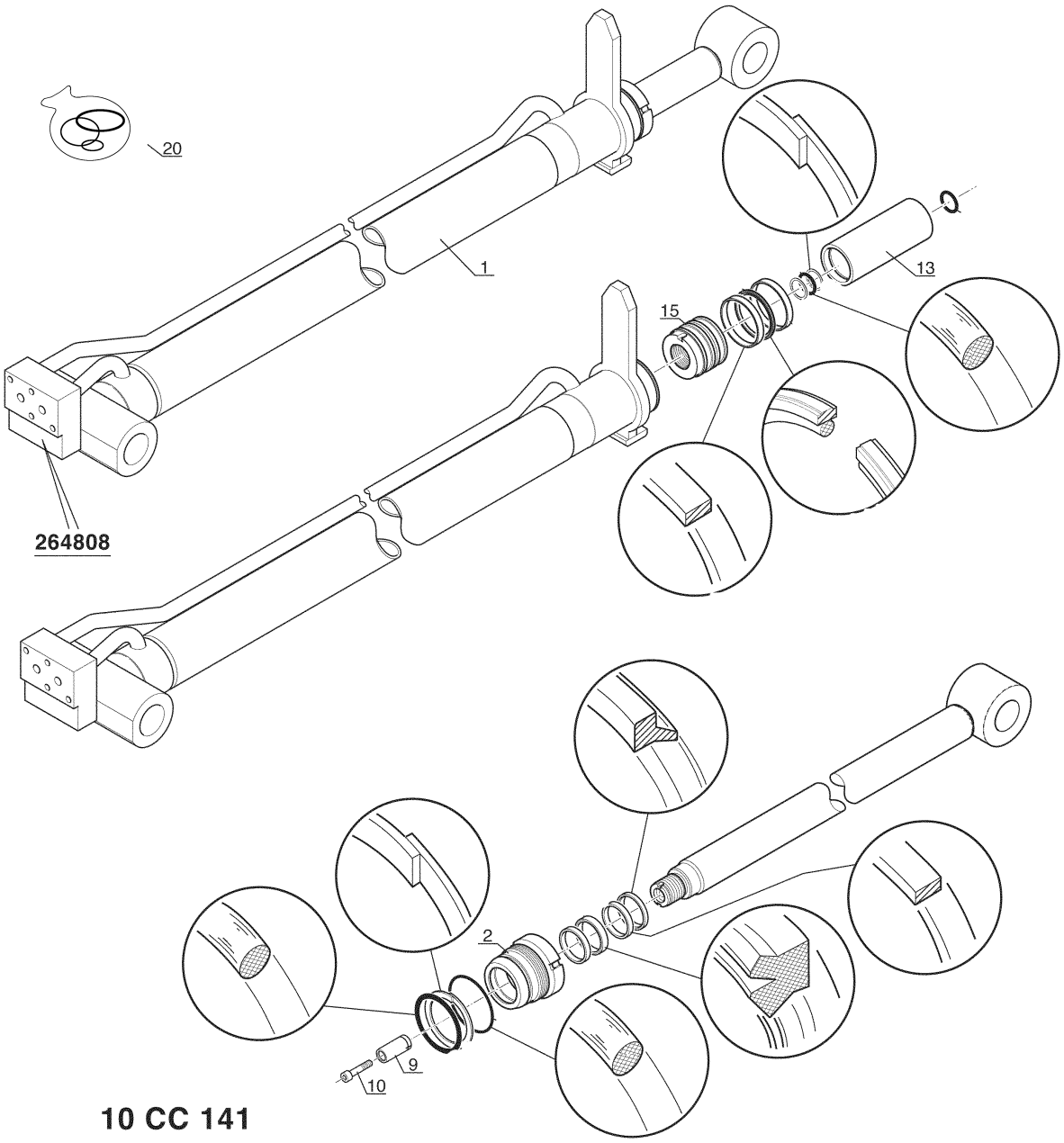

Ref. No.	Part No.	Description	Qty. Req.
01	106807	Telescope cylinder	1
02	215051	Fastening ring	1
09	215047	Socket	1
10	215046	Bolt	1
13	215050	Spacer	1
15	215052	Cylinder Piston	1
20	215044	Seal Kit	1

NOTE: *Before ordering service parts, be sure to verify that the cylinder body is stamped 264 805 as shown in figure 10 CC 141, above.*

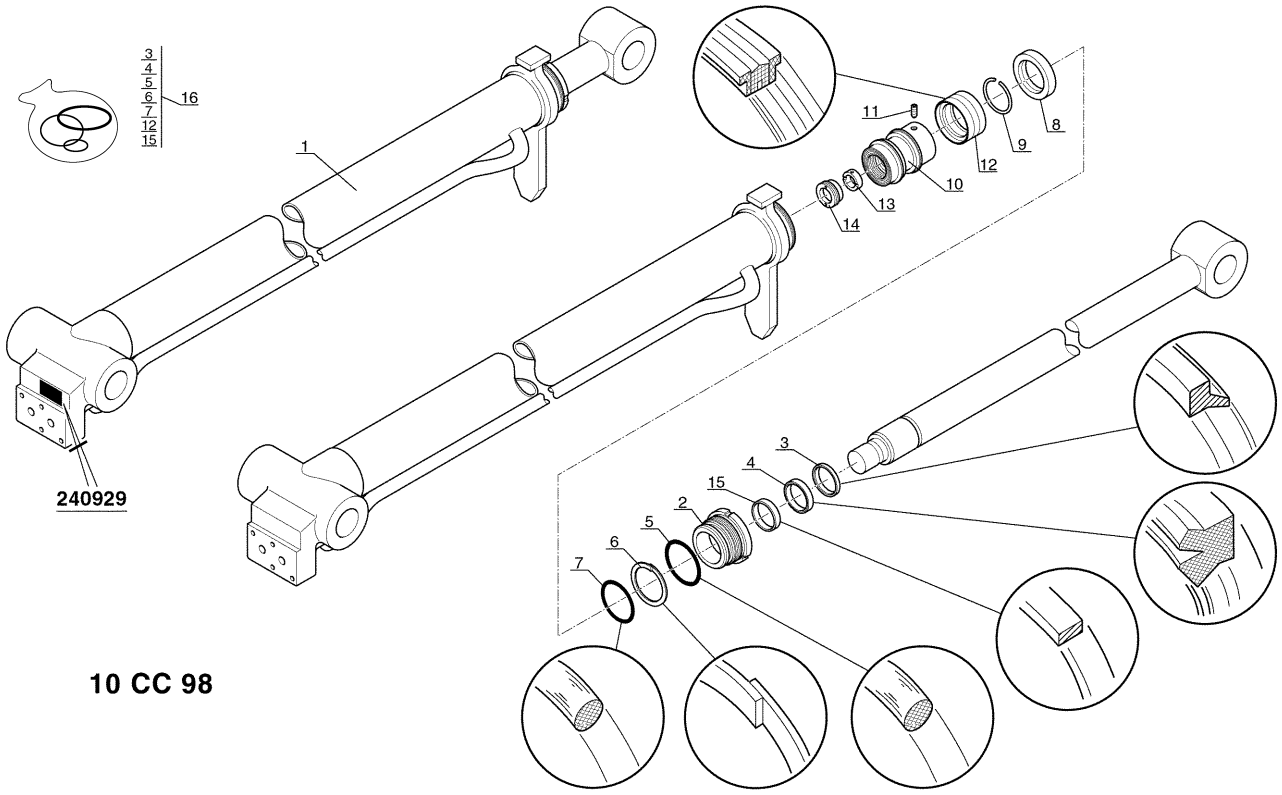

10 CC 98

Ref. No.	Part No.	Description	Qty. Req.
01	218912	Telescope cylinder	1
02	219697	Fastening ring	1
03	219859	Seal	1
04	219854	Seal	1
05	218343	O-ring	1
06	218406	Anti-extrusion seal	1
07	219672	O-ring	1
08	219183	Bushing	1
09	218477	Snap ring	1
10	219403	Cylinder piston	1
11	218112	Bolt	1
12	219182	Seal	1
13	219222	Bushing	1
14	219376	Bushing	1
15	219278	Seal	1
16	219989	Seal kit	1

NOTE: *Before ordering service parts, be sure to verify that the cylinder body is stamped 240 929 as shown in figure 10 CC 98, above.*

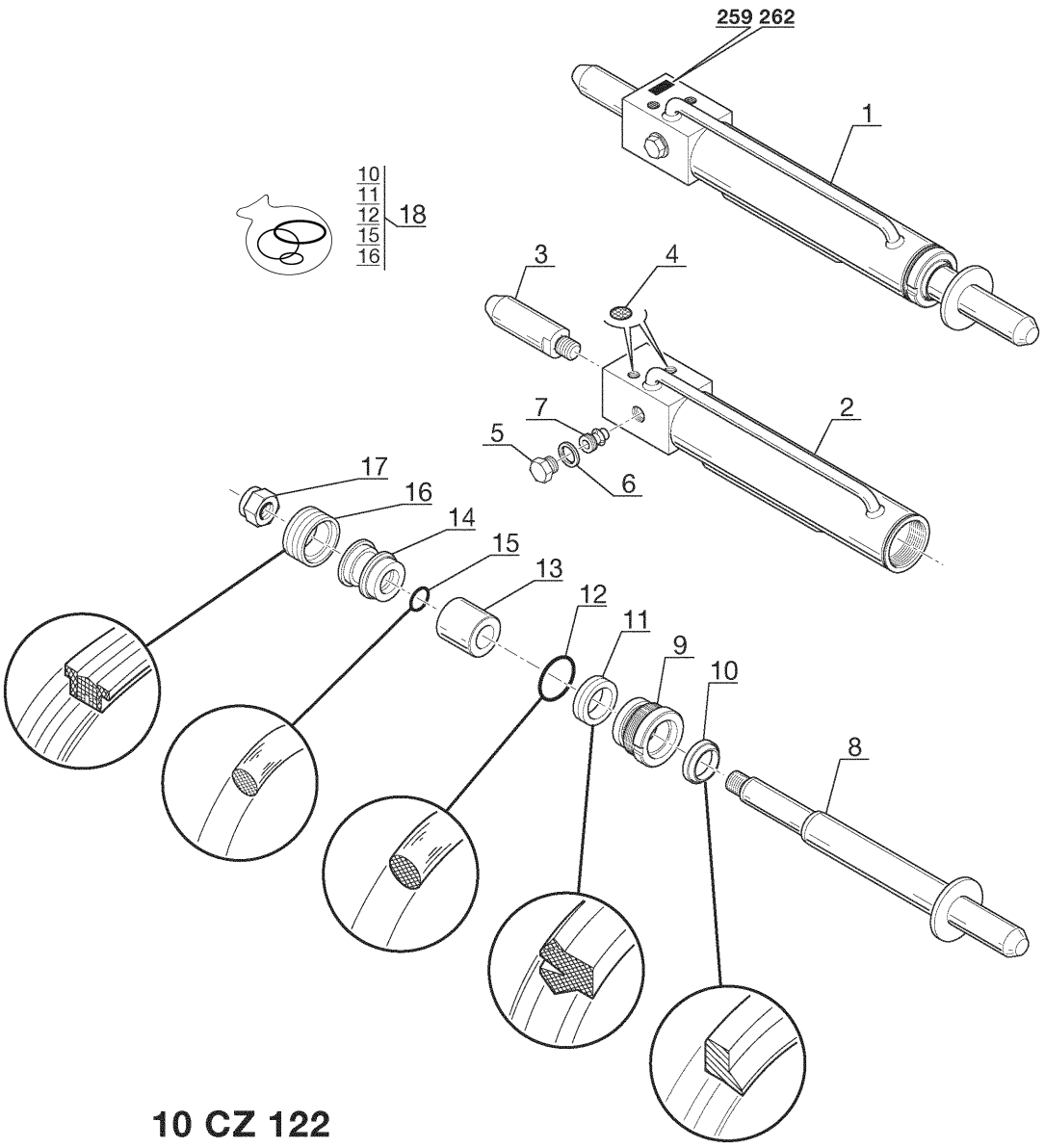

10 CZ 122

Carriage Lock Cylinder

Ref. No.	Part No.	Description	Qty. Req.
01	215416	Cylinder	1
02	NSS	Cylinder Body	1
03	215417	Lock Pin	1
04	217089	Screen	1
05	217090	Plug	1
06	217091	Seal	1
07	217092	Valve	1
08	217093	Cylinder Rod	1
09	217094	Head Gland	1
10	217095	Seal	1
11	217096	Seal	1
12	219158	O-ring	1
13	217097	Spacer	1
14	217098	Cylinder Piston	1
15	217099	O-ring	1
16	217100	Seal	1
17	217101	Nut	1
18	217102	Seal Kit	1

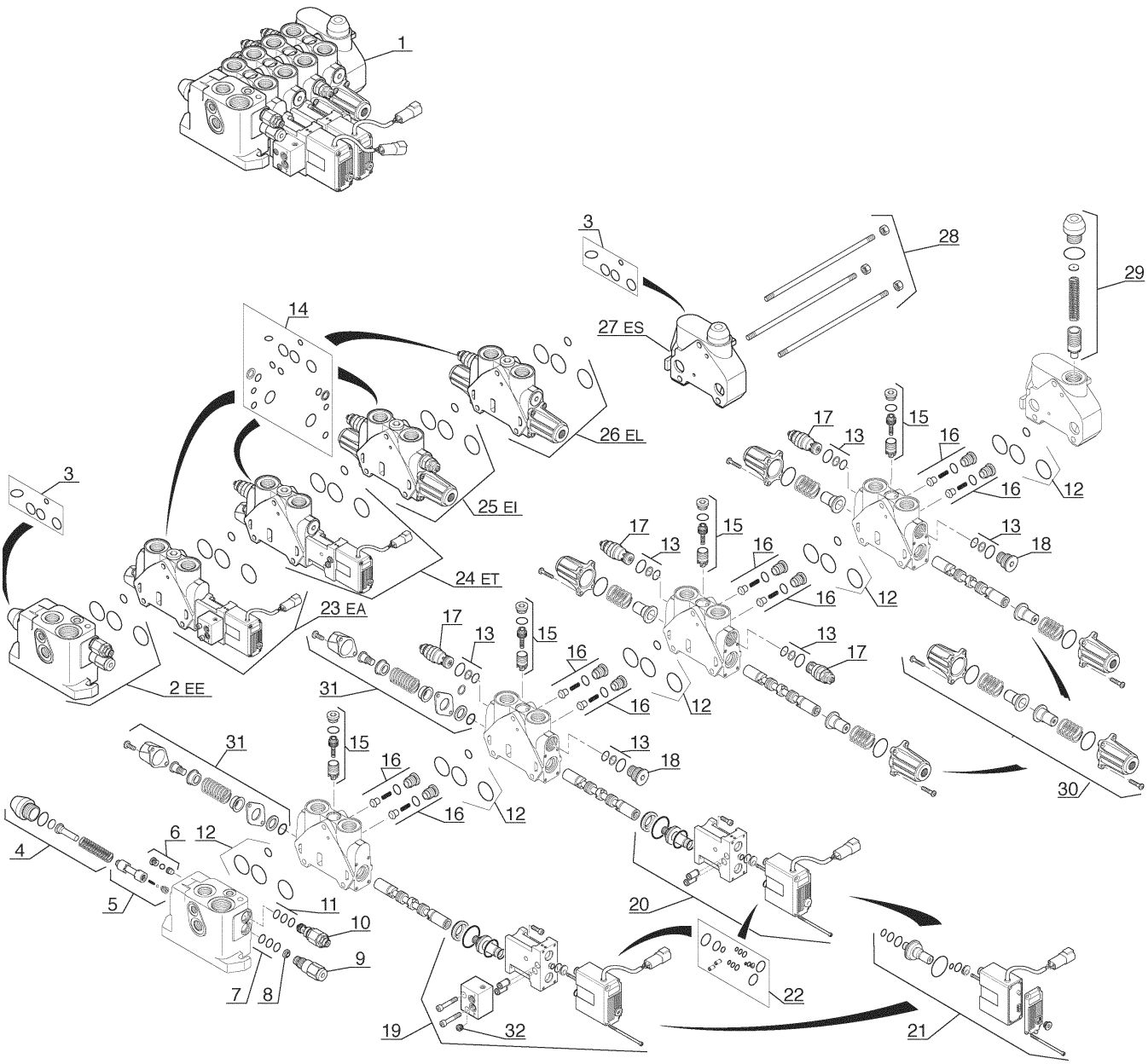
1
3
28
29
27 ES
14
26 EL
25 EI
24 ET
23 EA
2 EE
17
13
15
16
12
18
31
30
6
4
5
11
10
9
7
8
20
22
19
32
21

10 DA 325

Ref. No.	Part No.	Description	Qty. Req.
01	215312	Complete Valve	1
02	218185	Inlet section	1
03	218183	Seal kit	AR
04	218195	Plug kit	1
05	218194	Piston kit	1
06	218186	Selector kit	1
07	218177	Seal	1
08	218190	Filter	1
09	218202	Flow regulator	1
10	218212	Relief valve	1
11	218213	Seal	1
12	218183	Seal kit	AR
13	218179	Seal	6
14	218176	Seal kit	AR
15	218203	Balancing valve	4
16	218182	Valve	8
17	218180	Relief valve	4
18	218181	Plug	2
19	215256	Complete electrical drive	1
20	215255	Complete electrical drive	1
21	218215	Electric control	2
22	218216	Seal kit	AR
23	215254	Work section *(Attachment)*	1
24	218253	Work section *(Telescope)*	1
25	218191	Work section *(Tilting)*	1
26	218175	Work section *(Lifting)*	1
27	218187	End section	1
28	218205	Tie rod *(4 rods and nuts)*	1
29	218204	Relief valve	1
30	218178	Spring return drive	2
31	218219	Drive	2
32	218220	Filter	1

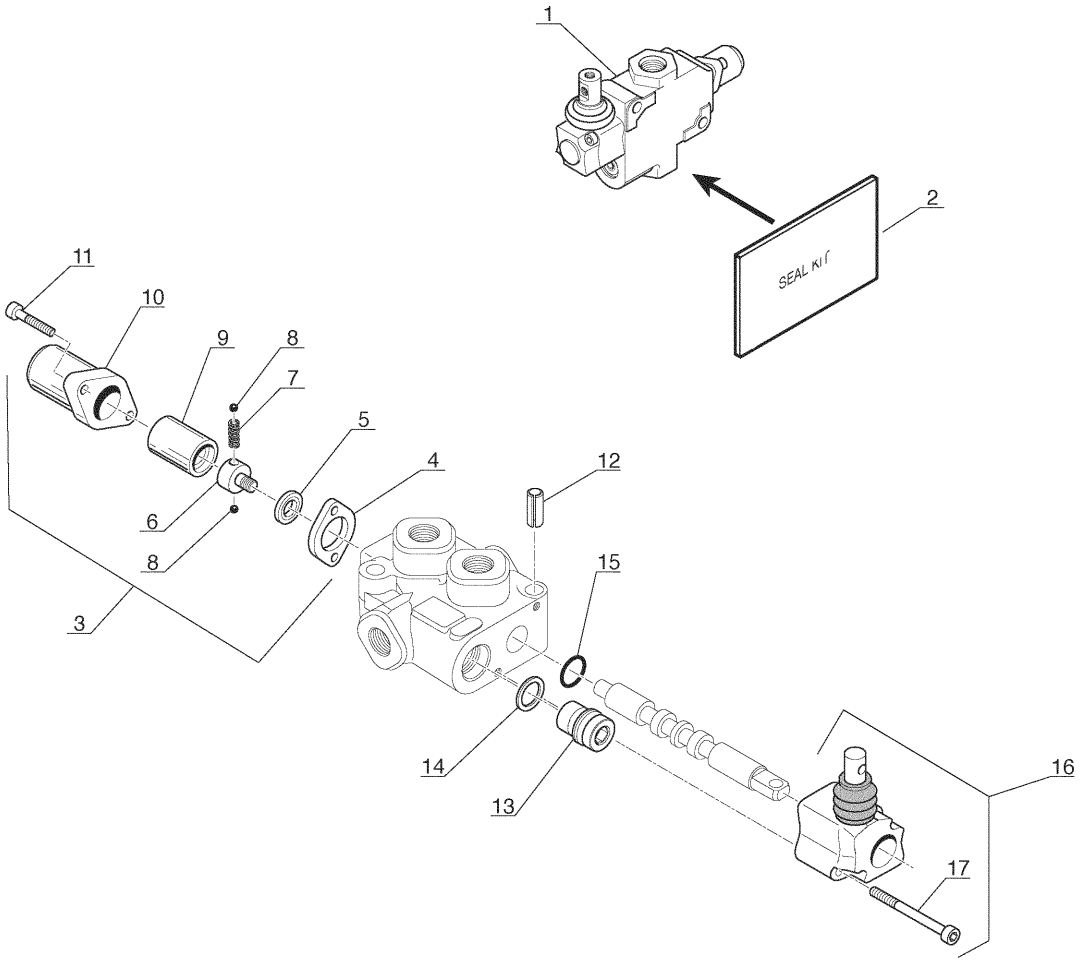

10 DA 118

Ref. No.	Part No.	Description	Qty. Req.
01	218695	Valve	1
02	219124	Seal kit	1
03	219111	Spring return drive	1
04	219119	Spacer	1
05	219117	Washer	1
06	219121	Bolt	1
07	219120	Spring	1
08	219122	Ball	2
09	219126	Coupling	1
10	219118	Cap	1
11	219123	Bolt	2
12	219113	Pin	2
13	219116	Plug	1
14	219115	Washer	1
15	219112	O-ring	2
16	219110	Complete manual drive	1
17	218398	Bolt	2

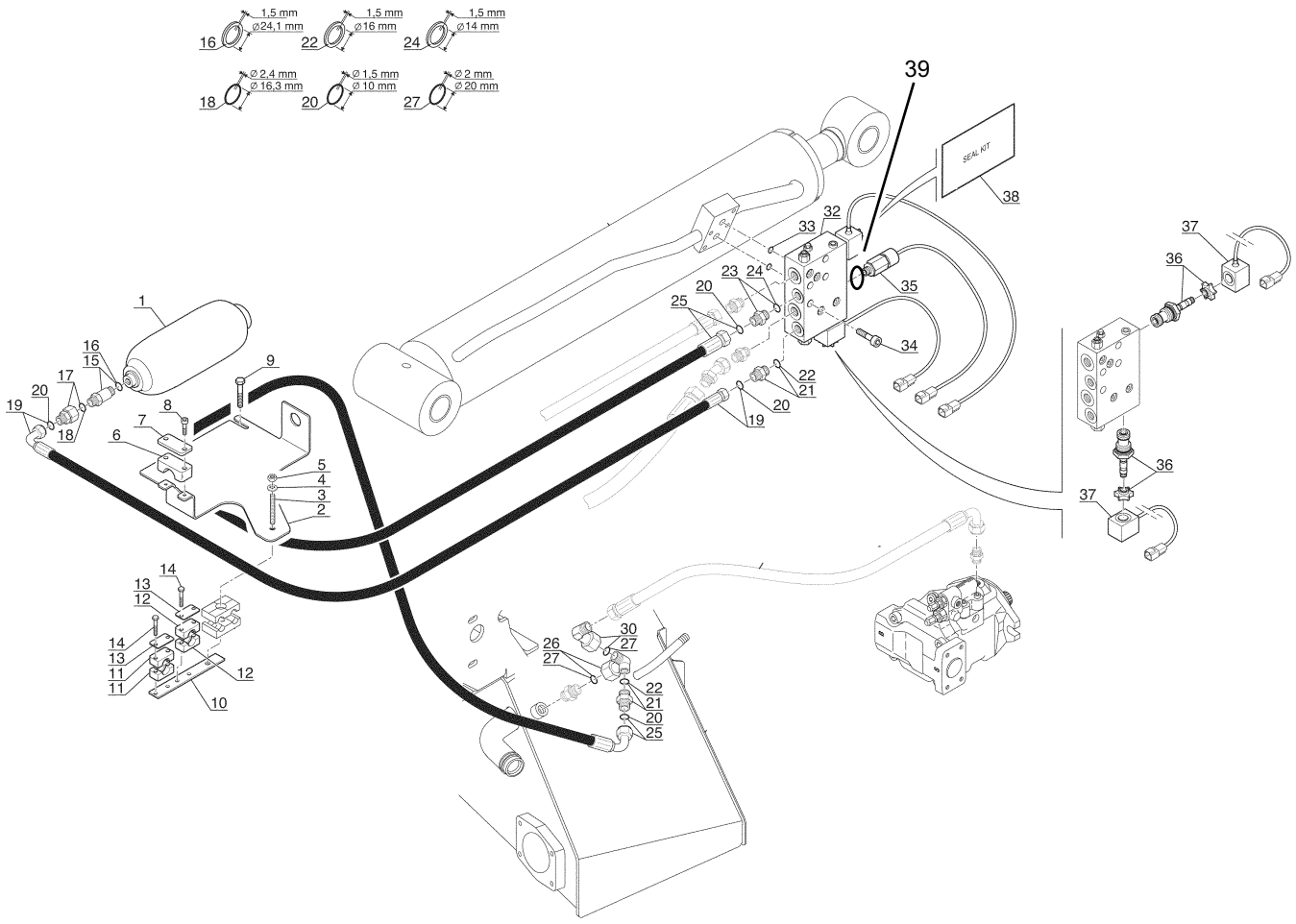
1,5 mm
⌀24,1 mm
16
1,5 mm
⌀16 mm
22
1,5 mm
⌀14 mm
24
⌀ 2,4 mm
⌀ 16,3 mm
18
⌀ 1,5 mm
⌀ 10 mm
20
⌀ 2 mm
⌀ 20 mm
27
39
SEAL KIT
38
32
33
37
36
23
24
20
25
35
34
1
16
15
17
20
19
18
9
8
7
6
5
4
3
2
22
21
19
20
36
37
14
13
12
14
13
11
11
12
10
26
27
30
27
22
21
20
25

10 AF 629

Ref. No.	Part No.	Description	Qty. Req.
01	215650	Accumulator	1
02	215653	Bracket	1
03	215651	Spindle	1
04	219867	Washer	1
05	219616	Nut, M8	1
06	216664	Half Clamp	1
07	216665	Plate	1
08	216089	Bolt, M6-40	2
09	219619	Bolt, M8-60	1
10	215655	Bracket	1
11	217161	Half Clamp	2
12	215654	Half Clamp	2
13	217617	Plate	2
14	216089	Bolt, M6-40	4
15	216474	Adapter	1
16	217950	Seal	AR
17	219913	Adapter	1
18	217909	O-ring	AR
19	215652	Hose	1
20	217947	O-ring	AR
21	219045	Adapter	2
22	217833	Seal	AR
23	215649	Adapter	1
24	215396	Seal	AR
25	215656	Hose	1
26	215657	Adapter	1
27	217944	O-ring	AR
30	217773	Adapter	1
32	215647	Valve *(includes items 36 and 37)*	1
33	218440	O-ring	2
34	219166	Bolt, M8-50	4
35	215648	Low Pressure Sensor/Switch	1
36	215562	Solenoid	2
37	215561	Solenoid	2
38	215395	Seal Kit	1
39	106320	Seal Bushing	1

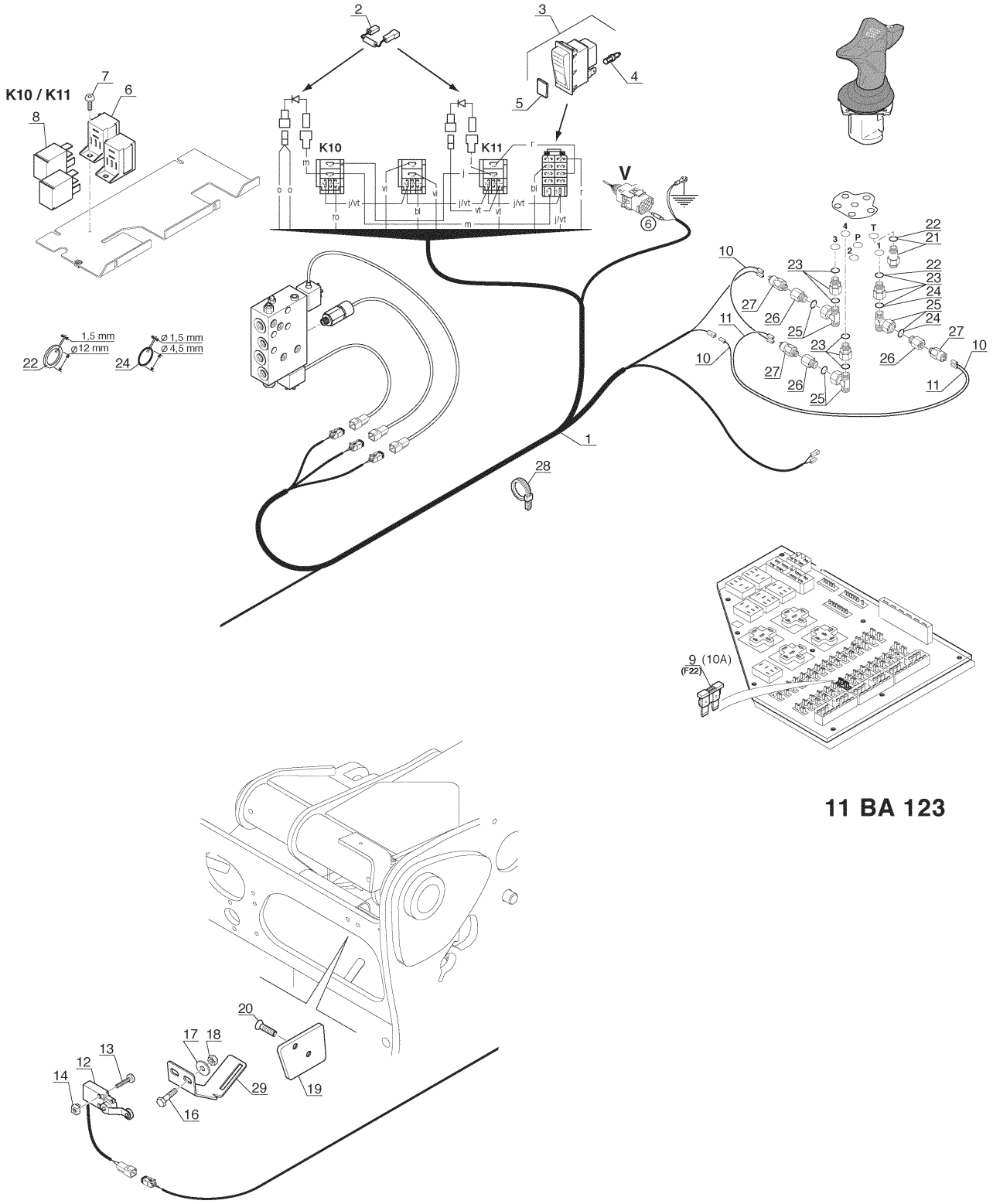
K10 / K11
K10
K11
V
1,5 mm
ø12 mm
ø 1,5 mm
ø 4,5 mm
9 (10A)
(F22)
11 BA 123

Ref. No.	Part No.	Description	Qty. Req.
01	215086	Wire Harness	1
02	217019	Diode	2
03	215629	Switch	1
04	217924	Bulb	1
05	215394	Green Lens	1
06	219691	Relay Bracket	2
07	219929	Bolt, M5-10 10.9	1
08	219948	Relay	2
09	219951	Fuse, 10A	1
10	215636	Wire Harness	2
11	215658	Wire Harness	1
12	215085	Switch	1
13	219036	Bolt, M4-20	2
14	219047	Nut	2
16	219610	Bolt, M8-25 8.8	2
17	219867	Washer	2
18	219616	Nut, M8	2
19	215644	Cam	1
20	215645	Bolt, M8-16 10.9	2
21	217983	Adapter	1
22	217929	Seal	AR
23	215632	Adapter	3
24	218092	O-ring	AR
25	215633	Adapter	3
26	215634	Adapter	3
27	215084	Pressure Switch	3
28	215630	Clamp	5
29	215083	Switch Bracket	1

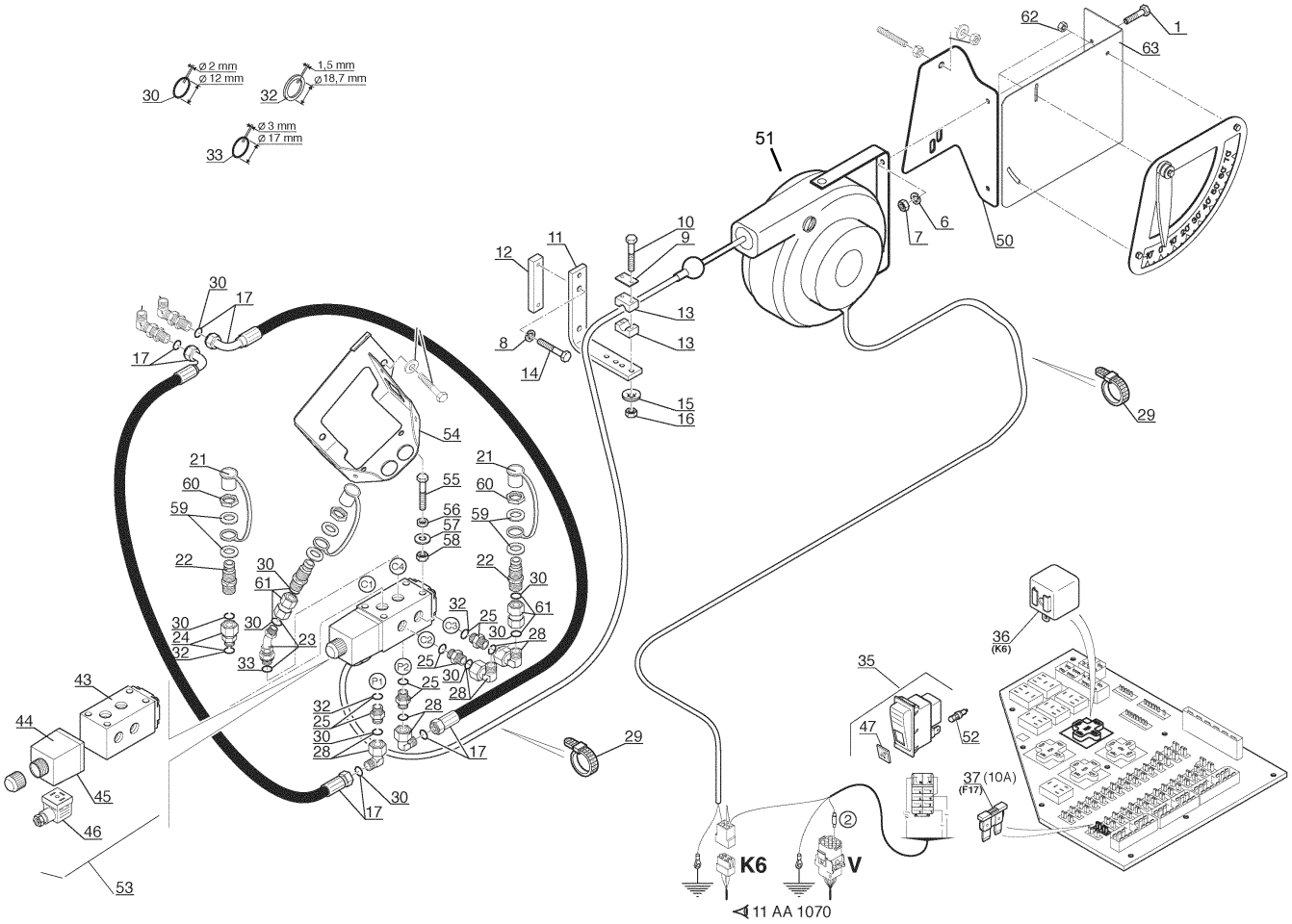

10 AF 628

Ref. No.	Part No.	Description	Qty. Req.
01	219055	Bolt, M8-20	2
06	219054	Washer	8
07	219616	Nut, M8	6
08	219054	Washer, M8	2
09	218364	Plate	1
10	217901	Bolt, M6-45	2
11	215448	Bracket	1
12	215447	Plate	1
13	218378	Clamp	2
14	219872	Nut, M8	2
15	218379	Washer	2
16	219022	Nut, M8	2
17	218068	Hose *(430 mm long)*	2
21	215280	Plug	2
22	215291	Fitting	2
23	215081	Fitting	1
24	215080	Fitting	1
25	219148	Fitting	4
28	218464	Fitting	4
29	215851	Nylon Tie	22
30	215294	O-Ring	AR
32	217933	Seal	AR
33	215079	O-Ring	AR
35	215870	Switch	1
36	219958	Relay	1
37	219951	Fuse (10A)	1
43	215078	Selector Manifold	1
44	215077	Plug	1
45	215076	Solenoid	1
46	215075	Test Port Adapter	1
47	215869	Lens	1
50	215074	Hose Reel Bracket	1
51	215450	Complete Hose Reel	1
52	217924	Bulb	1
53	215443	Selector (complete)	1
54	215073	Selector Bracket	1
55	215439	Bolt M8-80	2
56	215440	Spacer	2
57	218510	Washer, M8	2
58	219169	Nut, M8	2
59	215072	Retainer	4
60	218872	Nut	2
61	215281	Fitting	1
62	219616	Nut	3
63	215071	Bracket	1

GENERAL INFORMATION

CAUTION

ALWAYS read and follow the safety precautions and information shown on decals. If any decals are damaged or unreadable, or if the unit is repainted, the decals must be replaced. If repainting, BE SURE that all decals that apply to your machine are affixed in their proper locations

If there is a decal is affixed to a part that is to be replaced, be sure that the replacement part has the decal applied, or apply a new decal.

Decal location information is provided to assist in the proper selection and application of new decals, in the event the original decals become damaged or the machine is repainted.

For correct replacement of decals, compare the location photographs to the machine before starting to refinish the unit. Check off each required decal using the illustration reference number to find the part number, description and quantity in the list. Refer to the appropriate illustration for replacement locations.

NOTE: *Refer to the Safety chapter of the Operator's Manual for specific information regarding the various safety decals.*

NEW DECAL APPLICATION

Before applying new decals, surfaces must be free from dirt, dust, grease and other foreign material. To apply a solid-formed decal, remove the smaller portion of the decal backing paper and apply this part of the exposed adhesive backing to the clean surface while maintaining proper position and alignment. Slowly peel off the other portion of the backing paper while applying hand pressure to smooth out decal surface. To apply a die-cut decal, first remove the backing paper. Then, properly position the decal onto the clean mounting surface. After the decal is firmly applied and smoothly pressed down, remove the front covering paper.

Decal Kits

215070 CT7-23 Turbo Telescopic Handler

NOTE: *Decals may be purchased in kits or individually.*

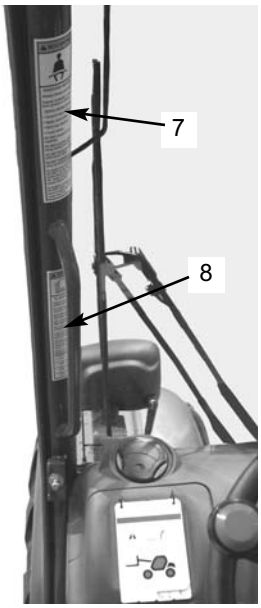

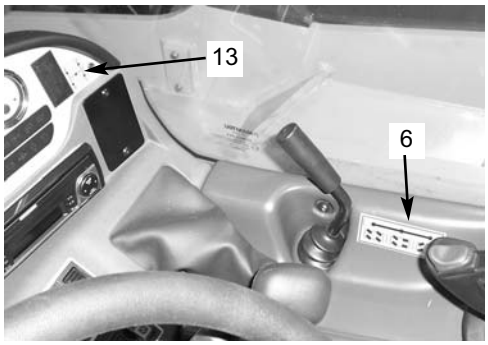

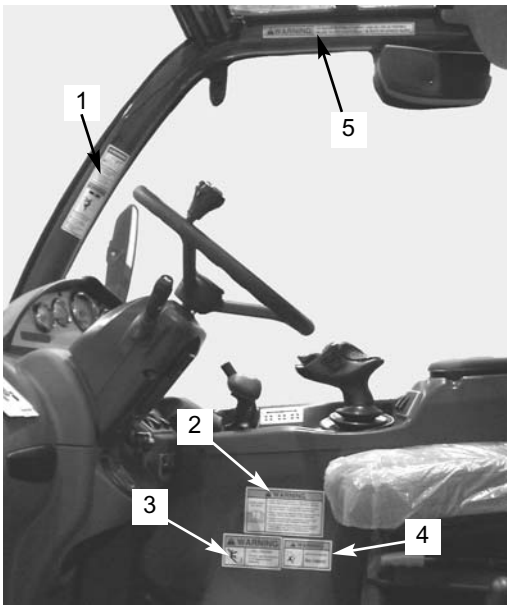

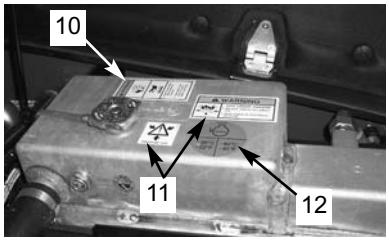

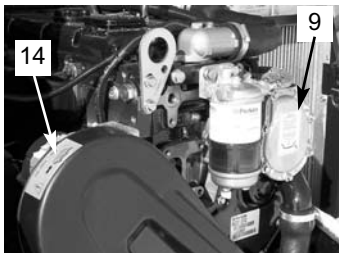

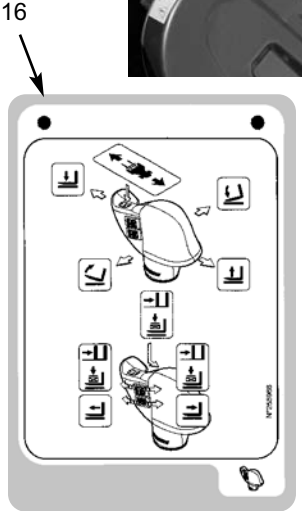

Ref. No.	Part No.	Description	Qty. Req.
01	L70307	Decal - Danger Hi-Volt	1
02	100359	Decal - Operator Manual	1
03	L65928	Decal - Personlift	1
04	L65932	Decal - Warning No Riders	1
05	093475	Decal - Warning Carry Load	1
06	218418	Decal - Steer Mode	1
07	101506	Decal - Seat Belt and Park Brake	1
08	L70306	Decal - Warning Tilt Hazard	1
09	215188	Decal - Fuel/Water Separator	1
10	L65924	Decal - Danger Rotating	1
11	072798	Decal - Coolant Under Pressure	1
12	218843	Decal - Engine Coolant	1
13	219039	Decal - Shift Pattern	1
14	215822	Belt Guard	1
15[a]	216390	Cover Chart	1
16[a]	215187	Joystick Control Chart	1
17[a]	215057	De-clutch Control Chart	1
18[a]	218915	Proper Operation Chart	1

Note a - Not included in Decal Kit 215070.

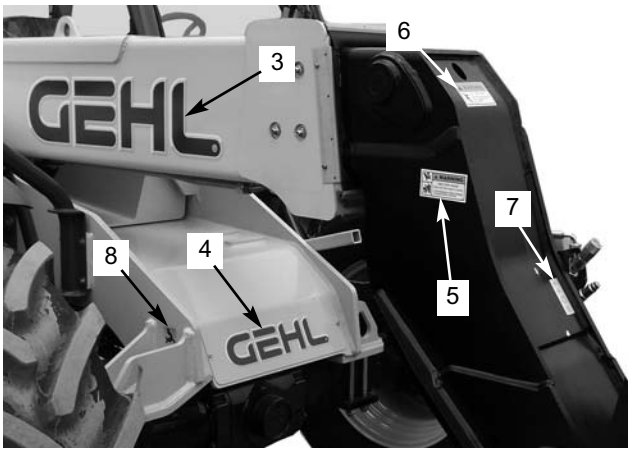

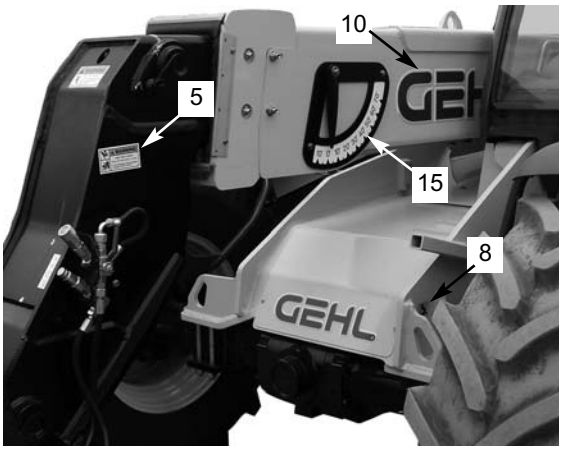

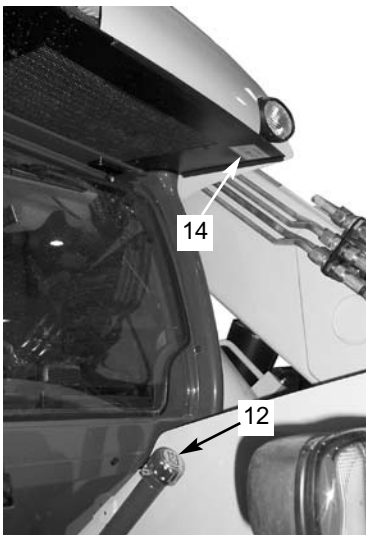

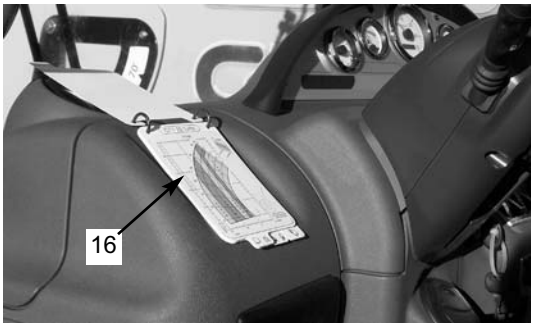

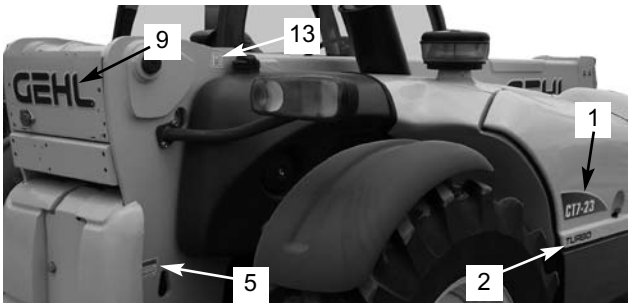

Ref. No.	Part No.	Description	Qty. Req.
01	103206	Decal - CT7-23 Engine Side	1
02	103202	Decal - "TURBO"	1
03	102025	Decal - Gehl 8.00 x 33.95	1
04	183963	Decal - Gehl 3.75 x 15.92	1
05	L65927	Decal - Pinch Point Warning	4
06	L65928	Decal - Personlift	1
07	218845	Decal - Hydraulic Couplers	1
08	219002	Decal - Tie-Down Point	3
09	184306	Decal - Gehl 4.75 X 20.16	1
10	183962	Decal - Gehl 6.00 x 25.47	1
11	103207	Decal - CT7-23 Cab Side	1
12	218842	Decal - Hydraulic Oil	1
13	137634	Decal - Diesel Fuel	1
14	215598	Decal - A/C	1
15	217684	Decal - Boom Angle	1
16	103622	Loadchart - Standard Carriage	1
	103623	Loadchart - Rotating-Carriage	1
	103624	Loadchart - 1.25 Cu.-Yd. Bucket	1
	103625	Loadchart - 2.50 Cu.-Yd. Bucket	1

Part No.	Page No.	Ref. No.
072798	204	11
093475	204	05
100359	204	02
101506	204	07
101792	53	13
101792	73	39
102025	205	03
103202	205	02
103206	205	01
103207	205	11
103211	142	03
103622	205	16
103623	205	16
103624	205	16
103625	205	16
105978	83	11
106341	143	22
106428	93	34
106428	121	62
106496	57	40
106496	65	09
106802	179	46
137634	205	13
183962	205	10
183963	205	04
184223	7	10
184223	121	33
184306	205	09
189145	7	15
189145	121	74
215011	37	51
215015	117	36
215016	117	39
215017	117	38
215018	117	37
215019	117	31
215020	117	02
215021	117	35
215022	117	30
215023	117	01
215024	43	16
215025	43	11
215026	43	06
215027	43	01
215027	45	22
215028	41	40
215028	43	19
215029	41	37
215030	41	32
215031	41	31
215032	41	28
215033	41	26
215034	41	25
215035	41	19
215036	41	18
215037	41	17
215037	43	14
215038	41	16
215038	43	12
215039	71	11
215040	71	01
215041	71	02
215042	71	12
215043	71	05
215057	204	17
215058	186	16
215059	186	10
215060	186	04
215061	186	03
215062	186	20
215063	186	01
215064	35	12
215066	85	48
215067	85	44
215068	85	28
215069	85	27
215070	203	00
215071	201	63
215072	201	59
215073	201	54
215074	201	50
215075	201	46
215076	201	45
215077	201	44
215078	201	43
215079	201	33
215080	201	24
215081	201	23
215083	199	29
215084	199	27
215085	199	12
215086	199	01
215088	53	102
215089	53	101
215092	23	11
215093	23	01
215094	167	11
215096	167	12
215097	167	04
215098	53	31
215099	53	30
215100	175	11
215103	21	23
215104	21	22
215105	21	21
215106	21	04
215107	27	101
215107	29	101
215109	27	94
215109	29	94
215110	27	93
215110	29	93
215111	27	91
215111	29	91
215112	27	90
215112	29	90
215113	19	59
215114	19	51
215115	19	47
215118	19	27
215120	13	84
215121	13	83
215122	13	67
215123	13	45
215124	13	06
215126	13	01
215127	11	57
215128	11	52
215129	11	51
215130	11	50
215131	11	49
215132	11	48
215133	11	47
215134	11	45
215135	11	42
215136	11	41
215137	11	31
215139	11	24
215139	13	93
215140	11	23
215141	11	09
215142	11	07
215142	11	14
215142	11	21
215142	13	68
215142	21	27
215143	11	02
215144	17	24
215145	17	23
215146	17	22
215147	17	21
215148	17	16
215149	17	09
215150	17	01
215151	37	32
215155	133	37
215156	133	33
215157	133	32
215158	133	31
215159	129	01
215160	155	02
215160	163	02
215162	81	64
215163	81	52
215164	81	50
215165	81	43
215167	81	41
215167	107	09
215168	108	13
215169	106	07
215171	99	23
215172	99	22
215173	105	19
215178	91	04
215179	93	14
215180	101	33
215181	101	32
215182	101	31
215183	101	22
215183	101	30
215184	101	20
215185	91	09
215187	204	16
215188	204	09
215189	53	47
215190	27	95
215190	29	95
215190	53	46
215191	27	98
215191	29	98
215191	53	28
215191	57	17
215192	53	27
215193	53	04
215194	53	02
215195	49	52
215195	51	30
215196	49	48
215198	49	31
215198	49	32
215198	49	51
215198	51	29
215198	167	02
215199	49	29
215200	49	28
215201	49	26
215202	49	22
215202	51	25
215203	49	20
215203	49	27
215203	51	24
215203	167	03
215204	65	44
215206	65	39
215207	65	38
215211	67	16
215212	67	15
215213	59	05
215214	69	01
215215	53	14
215215	63	04
215216	53	03
215216	63	02
215217	61	05
215218	53	01
215218	57	62
215219	57	60
215219	157	02
215220	57	58
215221	57	44
215221	61	02
215222	53	08
215222	57	23
215224	57	12
215224	65	33
215225	57	10

Part No.	Page No.	Ref. No.
215225	65	42
215226	55	02
215227	55	01
215227	57	01
215227	63	01
215235	35	11
215236	35	10
215237	35	09
215238	33	16
215239	33	15
215240	33	14
215241	33	13
215242	33	12
215243	33	11
215244	33	10
215245	33	09
215246	33	08
215247	33	07
215248	33	06
215249	33	05
215250	33	04
215251	33	03
215252	33	02
215253	61	03
215254	61	04
215254	193	23
215255	193	20
215256	193	19
215257	183	23
215258	183	21
215259	183	20
215260	183	19
215261	183	18
215262	183	17
215263	183	16
215264	183	15
215265	183	14
215266	183	13
215267	183	12
215268	183	11
215269	183	10
215270	183	09
215271	183	08
215272	183	07
215274	183	04
215275	147	38
215276	35	13
215276	147	78
215277	35	05
215277	147	30
215278	169	32
215279	169	15
215280	169	08
215280	201	21
215281	169	05
215281	201	61
215282	173	04
215283	173	02
215284	177	24
215285	173	15
215286	173	13
215287	171	40
215288	171	39
215289	171	21
215290	175	64
215291	169	07
215291	175	45
215291	201	22
215292	175	39
215293	175	25
215294	171	06
215294	175	12
215294	201	30
215295	175	01
215297	181	11
215298	181	63
215299	181	60
215300	181	53
215301	181	52
215308	181	51
215309	175	40
215309	181	50
215310	33	01
215310	61	01
215310	181	15
215311	181	05
215312	179	58
215312	193	01
215313	179	21
215314	143	06
215315	73	64
215316	73	59
215317	73	01
215318	21	35
215318	37	59
215318	39	04
215319	37	52
215322	27	67
215322	29	67
215323	27	66
215323	29	66
215324	27	65
215324	29	65
215325	27	59
215325	29	59
215326	27	55
215326	29	55
215327	27	53
215327	29	53
215328	27	51
215328	29	51
215329	27	47
215329	29	47
215330	27	39
215330	29	39
215331	27	38
215331	29	38
215332	27	37
215332	29	37
215333	27	33
215333	29	33
215334	27	32
215334	29	32
215335	27	28
215335	29	28
215336	27	21
215336	29	21
215337	27	20
215337	29	20
215338	27	15
215338	29	15
215339	27	13
215339	29	13
215340	27	01
215340	27	12
215340	29	01
215340	29	12
215342	145	89
215343	145	84
215344	145	35
215345	145	01
215346	121	04
215347	121	89
215348	121	77
215349	121	75
215350	121	74
215351	121	48
215352	121	47
215353	121	49
215354	121	46
215355	121	35
215356	121	17
215367	121	23
215368	121	72
215369	121	76
215370	121	73
215375	53	62
215378	69	09
215378	143	15
215379	143	12
215380	143	24
215381	85	24
215382	85	23
215383	85	22
215384	85	12
215385	85	07
215386	85	06
215387	85	05
215388	85	04
215389	85	17
215390	85	11
215391	85	29
215392	85	56
215393	85	02
215394	199	05
215395	197	38
215396	197	24
215397	53	60
215397	57	56
215410	27	92
215410	29	92
215414	25	21
215414	57	57
215415	25	00
215416	169	23
215416	191	01
215417	191	03
215418	85	03
215419	41	24
215419	117	24
215419	117	25
215419	123	27
215419	151	27
215419	159	11
215426	117	32
215429	185	10
215431	185	07
215432	185	06
215433	183	22
215433	185	05
215433	186	17
215434	185	04
215436	185	02
215437	177	11
215437	185	01
215439	201	55
215440	201	56
215443	201	53
215447	201	12
215448	201	11
215450	201	51
215452	71	06
215453	71	07
215455	159	14
215459	153	59
215459	161	60
215460	153	58
215460	161	59
215463	59	16
215463	121	78
215465	25	20
215472	45	21
215473	45	20
215474	45	19
215475	45	18
215476	45	17
215477	45	16
215478	45	15
215485	43	04
215487	43	09
215488	43	13
215492	41	27
215505	45	13
215510	45	01
215511	45	02
215512	45	03

Part No.	Page No.	Ref. No.
215513	45	04
215514	45	05
215515	45	06
215516	45	07
215517	45	08
215518	45	09
215519	45	10
215520	45	11
215532	7	00
215532	181	37
215534	181	44
215535	181	39
215536	181	38
215537	181	34
215561	171	99
215561	197	37
215562	171	98
215562	197	36
215586	37	34
215598	43	05
215598	205	14
215629	199	03
215630	199	28
215632	199	23
215633	199	25
215634	199	26
215636	199	10
215644	199	19
215645	199	20
215647	171	15
215647	197	32
215648	171	97
215648	197	35
215649	197	23
215650	197	01
215651	197	03
215652	197	19
215653	197	02
215654	197	12
215655	197	10
215656	197	25
215657	197	26
215658	199	11
215747	53	103
215750	7	14
215750	87	47
215754	85	53
215757	85	39
215760	85	52
215761	57	25
215761	85	49
215763	85	35
215767	57	18
215767	166	09
215767	167	09
215768	166	08
215769	85	20
215770	85	15
215772	85	45
215773	85	01
215774	166	03
215778	43	07
215778	49	19
215778	69	04
215779	49	18
215779	69	03
215782	23	02
215784	23	05
215785	15	01
215789	19	56
215789	19	60
215789	27	05
215789	27	30
215789	27	36
215789	29	05
215789	29	30
215789	29	36
215789	49	30
215789	71	04
215789	181	07
215797	131	23
215822	204	14
215843	111	04
215844	107	05
215845	95	15
215846	95	14
215847	95	13
215848	95	12
215851	115	02
215851	166	04
215851	167	06
215851	201	29
215852	71	07
215853	71	06
215869	169	30
215869	201	47
215870	53	00
215870	169	29
215870	201	35
215871	169	24
215872	169	17
215873	169	04
215873	175	46
215873	175	47
215878	73	62
215879	73	56
215880	45	12
215884	79	11
215890	67	53
215890	67	54
215895	41	14
215896	7	16
215896	41	13
215897	41	12
215897	91	20
215898	41	07
215899	41	02
215900	41	01
215902	37	31
215903	37	58
215907	37	49
215908	37	48
215909	37	47
215909	45	14
215910	37	46
215911	37	45
215912	37	43
215913	37	42
215914	37	40
215915	37	39
215918	37	33
215921	37	23
215922	37	11
215923	37	10
215924	37	09
215927	37	13
215934	121	64
215935	121	81
215937	121	63
215938	137	49
215939	143	25
215940	145	23
215941	145	53
215959	27	60
215959	29	60
215970	165	14
215972	165	28
215972	165	59
215974	165	37
215975	165	40
215978	165	69
215980	79	20
215981	79	21
215982	141	01
216089	197	08
216089	197	14
216120	179	43
216249	153	60
216249	161	61
216258	165	52
216258	165	57
216300	165	52
216300	165	57
216351	105	05
216362	103	07
216366	101	26
216390	204	15
216410	55	00
216474	197	15
216664	197	06
216665	181	46
216665	197	07
216767	145	90
216876	111	16
216894	101	01
216911	93	09
216912	91	03
216913	89	22
216927	81	31
216978	151	29
216978	159	26
216981	79	04
216987	135	04
216989	135	00
216990	135	02
216991	135	03
216994	133	93
216996	133	11
217009	166	07
217009	167	08
217015	127	08
217015	131	17
217019	199	02
217028	121	65
217089	191	04
217090	191	05
217091	191	06
217092	191	07
217093	191	08
217094	191	09
217095	191	10
217096	191	11
217097	191	13
217098	191	14
217099	191	15
217100	191	16
217101	191	17
217102	191	18
217103	169	12
217106	169	14
217111	169	26
217112	169	27
217161	197	11
217358	119	28
217361	175	48
217427	37	06
217441	21	42
217443	11	44
217444	11	46
217445	21	43
217448	13	40
217452	23	06
217484	11	54
217501	11	56
217523	27	23
217523	29	23
217523	145	85
217590	25	01
217591	25	07
217592	25	15
217617	197	13
217625	143	01
217642	31	06
217674	165	29
217681	165	60
217682	165	64

Part No.	Page No.	Ref. No.
217683	165	62
217684	165	63
217684	205	15
217685	165	61
217687	165	70
217691	143	02
217721	121	83
217724	121	88
217736	41	10
217766	85	21
217766	85	55
217773	197	30
217792	171	12
217793	165	10
217794	51	21
217795	55	10
217796	9	02
217796	57	47
217796	67	13
217797	67	30
217798	67	31
217799	55	31
217800	166	01
217801	166	06
217810	53	65
217812	53	59
217812	57	55
217813	115	01
217817	55	27
217820	59	10
217820	93	26
217820	127	04
217821	127	16
217822	67	04
217825	93	28
217826	93	29
217827	93	30
217828	91	05
217829	91	06
217830	93	33
217833	147	45
217833	197	22
217834	79	18
217835	83	32
217836	79	13
217837	59	22
217837	121	13
217838	79	16
217839	79	14
217841	79	09
217842	87	11
217845	87	27
217846	87	30
217847	53	51
217847	71	08
217849	105	16
217851	81	40
217852	99	21
217853	93	32
217854	105	03
217855	99	20
217856	81	35
217857	81	36
217858	81	39
217858	99	24
217859	99	19
217860	111	07
217861	91	03
217862	91	03
217863	91	04
217864	91	04
217865	91	04
217866	93	10
217866	93	15
217867	93	11
217867	93	16
217869	91	01
217870	91	09
217871	91	11
217872	93	01
217873	103	16
217874	99	14
217875	99	18
217876	105	01
217877	105	14
217878	105	15
217879	112	01
217880	111	02
217881	111	01
217882	111	05
217884	111	06
217885	87	35
217885	111	08
217887	111	10
217888	111	12
217888	111	14
217889	111	11
217889	111	13
217890	111	15
217891	111	17
217893	111	19
217894	93	31
217895	59	17
217895	93	27
217897	145	59
217899	133	49
217899	179	45
217900	179	29
217901	147	08
217901	201	10
217904	179	48
217905	165	04
217906	165	04
217907	179	53
217908	181	03
217909	131	62
217909	171	29
217909	177	06
217909	197	18
217910	133	29
217911	53	66
217911	133	29
217912	133	29
217913	133	29
217914	133	03
217915	133	03
217916	133	03
217917	133	03
217918	133	03
217919	133	03
217920	169	06
217920	175	44
217920	177	10
217921	173	14
217921	175	52
217922	173	16
217922	175	53
217923	145	54
217923	147	50
217924	15	04
217924	53	23
217924	85	50
217924	167	10
217924	169	31
217924	199	04
217924	201	52
217927	145	79
217928	145	69
217929	145	43
217929	147	02
217929	169	13
217929	179	51
217929	181	17
217929	199	22
217930	171	14
217930	173	11
217930	175	18
217932	57	30
217932	65	01
217932	145	61
217933	145	48
217933	147	33
217933	171	04
217933	179	44
217933	201	32
217934	187	14
217937	165	14
217938	165	14
217939	165	14
217941	165	15
217941	165	26
217941	165	30
217942	127	07
217942	131	04
217942	131	13
217942	131	38
217942	133	65
217942	147	35
217942	169	03
217942	177	04
217943	145	45
217943	147	04
217943	179	55
217943	181	26
217944	179	40
217944	197	27
217945	145	60
217947	147	43
217947	169	10
217947	171	33
217947	177	08
217947	197	20
217948	179	101
217949	179	47
217950	171	02
217950	177	02
217950	179	99
217950	197	16
217951	179	66
217952	171	01
217952	171	38
217952	177	19
217952	177	21
217956	165	43
217956	175	26
217958	179	50
217959	165	15
217959	165	26
217959	165	53
217960	165	08
217961	179	64
217962	165	15
217962	165	20
217962	165	53
217963	187	11
217964	165	34
217964	165	41
217965	165	29
217966	165	09
217967	165	29
217968	165	29
217971	187	13
217973	187	12
217974	165	45
217974	169	25
217974	186	06
217977	175	17
217979	53	64
217979	57	45
217979	145	09
217980	165	15
217980	165	26
217980	165	53
217980	165	71
217980	181	01
217982	145	51

Part No.	Page No.	Ref. No.
217983	181	25
217983	199	21
217984	147	03
217984	147	22
217985	77	10
217985	145	50
217985	181	30
217986	179	76
217987	165	52
217987	165	57
217988	165	52
217988	165	57
217989	179	72
217990	145	49
217992	181	18
217992	181	21
217992	181	22
217993	179	100
217994	165	20
217994	166	05
217994	167	05
217995	165	33
217996	165	35
217998	165	42
218000	175	27
218001	165	44
218006	145	44
218007	13	40
218009	65	12
218010	179	52
218011	179	62
218012	179	63
218013	171	30
218014	169	02
218014	175	63
218014	177	18
218015	147	11
218016	165	25
218017	165	25
218018	165	25
218021	145	29
218022	175	57
218023	179	28
218024	181	12
218025	171	07
218026	179	03
218029	19	45
218034	145	05
218035	53	52
218035	57	52
218035	71	10
218037	147	34
218038	145	24
218039	145	04
218042	7	07
218042	9	03
218043	53	07
218043	57	28
218045	165	32
218046	165	21
218049	179	94
218049	181	09
218050	179	39
218053	181	31
218055	145	37
218059	179	30
218059	179	33
218060	179	26
218061	179	01
218064	179	90
218065	179	56
218065	181	48
218068	171	03
218068	201	17
218070	177	22
218072	177	07
218073	171	32
218074	177	20
218075	181	20
218076	181	24
218077	181	23
218078	181	28
218079	171	28
218080	177	17
218081	177	05
218082	179	70
218083	9	01
218083	179	67
218086	151	11
218086	159	17
218087	151	11
218087	159	17
218090	147	07
218091	171	31
218091	171	41
218091	177	01
218092	77	04
218092	181	19
218092	199	24
218093	179	82
218094	179	98
218094	181	54
218095	145	47
218095	179	79
218097	179	87
218098	181	29
218099	145	17
218100	151	10
218100	159	02
218101	151	10
218101	159	02
218102	137	01
218103	137	01
218104	137	01
218105	137	01
218106	137	01
218107	137	10
218108	137	10
218109	137	10
218110	137	10
218111	137	10
218112	189	11
218113	151	11
218113	159	17
218114	151	10
218114	159	02
218115	121	39
218116	121	38
218117	151	11
218117	159	17
218118	151	10
218118	159	02
218119	133	23
218120	133	56
218121	133	56
218122	133	56
218123	133	56
218124	131	28
218125	131	08
218126	131	70
218129	131	71
218129	133	92
218131	133	98
218132	131	74
218132	133	99
218134	131	72
218134	133	94
218135	131	73
218135	133	95
218136	133	96
218137	133	97
218138	151	01
218138	159	23
218139	21	37
218142	187	15
218143	187	06
218144	187	17
218145	187	19
218146	121	69
218147	53	38
218150	21	08
218155	25	02
218156	25	03
218157	25	04
218158	25	05
218159	25	06
218161	25	08
218162	25	09
218163	25	10
218164	25	12
218165	25	13
218166	25	14
218167	25	16
218168	25	17
218169	25	18
218170	25	19
218172	153	52
218172	161	53
218173	153	52
218173	161	53
218174	153	52
218174	161	53
218175	193	26
218176	193	14
218177	193	07
218178	193	30
218179	193	13
218180	193	17
218181	193	18
218182	193	16
218183	193	03
218183	193	12
218185	193	02
218186	193	06
218187	193	27
218190	193	08
218191	193	25
218194	193	05
218195	193	04
218196	187	16
218200	179	71
218202	193	09
218203	193	15
218204	193	29
218205	193	28
218206	187	02
218207	187	10
218208	187	18
218212	193	10
218213	193	11
218215	193	21
218216	193	22
218219	193	31
218220	193	32
218221	137	47
218222	137	47
218223	137	47
218224	137	47
218225	137	47
218226	137	47
218227	137	47
218228	137	47
218229	137	47
218230	137	47
218231	137	47
218232	137	47
218238	121	36
218239	121	37
218244	121	51
218247	121	58
218248	121	57
218249	121	60
218252	179	32
218253	193	24
218254	137	47
218255	137	47

Part No.	Page No.	Ref. No.
218256	137	47
218257	137	47
218259	153	08
218259	161	08
218260	153	06
218260	161	06
218261	155	11
218261	163	11
218262	57	48
218262	59	13
218262	89	19
218262	127	02
218263	150	01
218263	153	33
218263	158	01
218263	161	33
218264	151	15
218264	159	04
218265	179	17
218266	151	04
218266	159	20
218268	95	08
218268	101	18
218268	101	23
218268	111	03
218268	111	18
218268	121	44
218269	155	13
218269	163	13
218270	153	16
218270	155	12
218270	161	16
218270	163	12
218271	153	09
218271	161	09
218272	108	10
218273	108	05
218274	131	39
218275	133	42
218276	131	21
218277	133	34
218278	133	04
218279	133	30
218280	131	52
218281	133	43
218282	133	27
218283	133	06
218284	131	22
218285	133	21
218286	133	45
218287	133	44
218288	133	47
218291	131	36
218292	133	36
218293	133	35
218293	133	41
218294	131	34
218295	131	50
218296	131	33
218297	133	02
218297	137	04
218298	131	06
218299	131	16
218299	137	23
218300	133	62
218301	131	07
218302	131	25
218303	131	43
218304	133	68
218305	138	06
218305	139	05
218306	138	07
218306	139	06
218307	138	03
218307	139	02
218308	13	35
218308	13	48
218308	138	04
218308	139	03
218308	141	04
218309	138	05
218309	139	04
218310	138	02
218311	133	50
218312	91	05
218313	91	06
218314	151	14
218314	159	07
218316	182	06
218316	183	06
218316	185	09
218316	186	05
218316	187	03
218316	187	08
218317	150	08
218317	153	07
218317	158	06
218317	161	07
218318	151	12
218318	159	16
218319	83	17
218319	117	08
218319	153	01
218319	161	01
218319	165	16
218319	165	27
218319	165	31
218319	165	73
218319	166	02
218319	167	07
218319	181	61
218320	153	17
218320	161	17
218320	165	03
218320	165	23
218320	165	36
218320	165	46
218321	105	17
218321	151	05
218321	159	06
218322	151	08
218322	159	19
218323	101	09
218324	107	02
218324	107	06
218324	107	10
218325	91	07
218325	101	02
218326	97	05
218326	97	09
218327	89	10
218327	93	07
218328	97	06
218328	97	10
218329	101	11
218330	101	04
218331	93	20
218331	101	25
218332	97	16
218333	97	15
218334	89	03
218335	101	10
218336	131	60
218336	137	44
218337	89	02
218338	89	09
218339	67	03
218340	175	55
218341	181	62
218343	189	05
218344	11	35
218344	23	08
218344	23	15
218344	81	46
218344	147	10
218344	181	47
218345	19	53
218347	41	15
218347	49	17
218347	51	17
218347	51	32
218347	131	53
218347	181	02
218348	83	20
218350	181	41
218351	11	10
218356	169	21
218356	177	09
218356	177	15
218357	55	07
218357	65	13
218357	81	05
218358	156	06
218359	19	15
218361	41	38
218361	145	75
218361	147	68
218361	169	19
218361	175	32
218362	147	60
218362	147	63
218363	147	67
218363	169	18
218363	175	14
218363	175	31
218363	175	36
218364	145	72
218364	201	09
218365	47	06
218365	171	36
218365	171	43
218365	175	09
218365	177	25
218367	145	74
218368	47	05
218370	35	08
218372	177	26
218373	81	29
218374	81	07
218376	125	03
218376	125	24
218378	145	71
218378	201	13
218379	13	56
218379	23	04
218379	23	13
218379	47	18
218379	55	26
218379	67	41
218379	67	44
218379	67	51
218379	73	08
218379	73	13
218379	73	20
218379	73	23
218379	73	53
218379	123	26
218379	165	12
218379	201	15
218380	175	08
218388	145	68
218391	49	10
218391	49	13
218391	51	13
218391	147	12
218391	147	74
218391	179	41
218393	179	25
218394	125	22
218395	13	57
218395	13	75
218395	19	31
218395	21	05
218395	21	10
218395	21	38
218395	21	41

Part No.	Page No.	Ref. No.
218395	27	56
218395	29	56
218396	11	00
218396	13	26
218396	13	94
218397	77	01
218398	13	71
218398	195	17
218399	13	03
218402	13	74
218403	11	19
218404	11	18
218405	11	17
218406	189	06
218408	41	36
218408	59	20
218409	13	29
218409	13	43
218409	19	01
218409	19	32
218409	19	37
218409	23	12
218409	27	02
218409	27	04
218409	27	49
218409	27	61
218409	27	63
218409	27	69
218409	29	02
218409	29	04
218409	29	49
218409	29	61
218409	29	63
218409	29	69
218409	85	25
218410	13	65
218411	13	70
218412	79	15
218413	79	17
218415	13	72
218415	19	22
218415	21	11
218415	21	29
218415	27	41
218415	29	41
218415	39	11
218415	53	56
218415	53	67
218415	65	51
218416	79	10
218417	125	14
218418	204	06
218420	53	12
218420	57	24
218422	73	36
218423	19	50
218423	79	05
218424	11	27
218425	13	33
218425	13	36
218425	13	50
218425	13	51
218426	182	12
218427	13	73
218428	63	05
218432	117	03
218433	47	10
218433	147	16
218436	179	14
218437	43	15
218437	179	13
218439	13	91
218439	19	10
218439	21	45
218439	23	07
218439	23	14
218439	27	03
218439	27	07
218439	27	09
218439	27	52
218439	27	62
218439	27	64
218439	27	70
218439	29	03
218439	29	07
218439	29	09
218439	29	52
218439	29	62
218439	29	64
218439	29	70
218439	49	04
218439	49	54
218439	51	04
218439	51	19
218439	67	06
218439	81	45
218439	85	26
218439	119	27
218439	147	09
218439	147	27
218439	147	71
218439	181	10
218439	181	13
218439	181	40
218440	171	17
218440	173	07
218440	175	23
218440	197	33
218441	171	27
218441	173	12
218442	145	08
218443	145	56
218443	145	65
218443	145	81
218443	179	77
218443	179	88
218443	181	27
218443	181	32
218443	181	55
218445	11	22
218445	71	03
218446	11	32
218447	11	30
218447	13	37
218447	13	63
218448	11	39
218448	13	96
218449	13	55
218450	147	41
218450	147	62
218450	171	34
218452	165	18
218453	145	42
218453	145	46
218453	145	52
218453	145	58
218453	147	01
218453	147	06
218453	147	20
218453	147	23
218453	179	57
218453	179	75
218453	179	78
218453	179	93
218453	181	33
218453	181	36
218453	181	57
218454	27	11
218454	29	11
218455	171	10
218455	179	80
218456	53	15
218459	39	13
218459	53	57
218460	182	07
218460	187	04
218460	187	09
218462	11	05
218463	11	04
218464	147	36
218464	171	05
218464	175	16
218464	201	28
218466	125	23
218467	13	11
218467	13	28
218467	21	03
218470	87	26
218470	117	29
218471	13	12
218471	13	13
218471	19	54
218471	23	03
218472	13	14
218473	147	64
218473	177	16
218474	35	06
218474	147	24
218477	189	09
218478	27	43
218478	29	43
218479	47	01
218480	13	18
218482	67	55
218483	165	17
218484	182	22
218484	187	21
218485	11	12
218487	13	34
218487	13	49
218488	13	69
218489	73	16
218490	57	14
218490	65	27
218491	11	53
218491	73	46
218491	119	23
218492	147	57
218493	87	20
218495	145	07
218496	165	02
218497	47	02
218497	85	40
218497	147	39
218498	147	61
218499	117	34
218500	117	28
218501	27	71
218501	29	71
218502	19	06
218502	19	48
218503	117	20
218503	179	37
218504	117	15
218505	13	39
218506	11	38
218506	13	47
218507	11	06
218507	11	13
218507	13	66
218507	27	48
218507	29	48
218507	181	08
218508	83	35
218510	11	28
218510	13	38
218510	13	64
218510	17	08
218510	21	24
218510	41	33
218510	53	63
218510	57	46
218510	65	46
218510	67	28
218510	67	56
218510	73	58

Part No.	Page No.	Ref. No.
218510	81	49
218510	81	56
218510	83	29
218510	87	16
218510	87	44
218510	119	08
218510	119	20
218510	143	05
218510	143	14
218510	145	06
218510	175	03
218510	175	41
218510	175	49
218510	175	62
218510	179	04
218510	181	43
218510	201	57
218511	21	17
218511	27	85
218511	29	85
218511	35	13
218511	43	17
218511	71	15
218511	85	13
218511	145	86
218511	147	79
218512	25	11
218514	165	22
218515	177	12
218518	19	16
218519	129	02
218520	129	03
218521	129	06
218522	129	04
218523	129	07
218524	129	05
218525	147	31
218528	67	05
218530	81	62
218531	147	25
218534	147	65
218538	182	03
218538	183	03
218541	143	20
218542	81	02
218543	81	03
218544	55	21
218545	85	33
218547	165	50
218550	27	16
218550	29	16
218551	19	14
218552	177	03
218554	147	44
218558	165	13
218558	165	24
218559	165	56
218559	165	58
218561	47	14
218561	49	01
218561	51	01
218561	85	43
218565	145	66
218566	137	42
218568	165	05
218568	165	47
218570	83	16
218571	121	01
218572	83	22
218573	57	37
218573	57	41
218573	67	26
218573	67	33
218578	53	06
218578	57	26
218579	143	09
218583	156	05
218588	121	07
218589	87	05
218590	87	10
218591	7	12
218591	87	01
218596	138	01
218597	139	01
218607	65	100
218608	53	36
218608	57	43
218609	53	32
218609	57	21
218610	53	34
218610	57	20
218611	27	96
218611	29	96
218611	57	22
218613	53	21
218613	63	03
218614	27	99
218614	29	99
218614	57	16
218615	53	26
218615	57	19
218616	15	02
218616	53	48
218616	57	42
218619	27	97
218619	29	97
218619	53	18
218619	53	40
218620	59	06
218620	67	01
218622	83	33
218626	121	03
218635	7	13
218635	87	02
218636	87	28
218638	67	20
218639	67	32
218640	177	30
218642	179	68
218643	179	65
218644	179	20
218646	179	24
218651	37	05
218653	39	15
218656	125	08
218657	125	12
218658	55	03
218662	11	01
218663	13	05
218665	13	22
218667	83	24
218668	83	25
218670	125	38
218672	83	01
218673	121	02
218674	125	19
218674	125	41
218675	125	28
218677	83	18
218678	83	26
218679	145	70
218680	145	83
218683	27	35
218683	27	80
218683	29	35
218683	29	80
218684	27	40
218684	29	40
218685	27	42
218685	29	42
218686	53	55
218686	55	29
218686	57	51
218689	117	22
218690	27	22
218690	29	22
218690	43	18
218690	67	22
218690	85	14
218691	67	21
218694	121	19
218695	147	54
218695	195	01
218697	121	16
218698	121	18
218700	121	14
218701	121	21
218702	121	11
218703	121	15
218704	121	12
218705	121	10
218706	121	09
218713	171	23
218717	73	11
218718	27	50
218718	29	50
218723	143	03
218724	65	30
218725	53	61
218725	67	23
218729	179	02
218733	175	15
218733	175	37
218735	185	03
218735	185	08
218735	187	05
218736	147	48
218737	85	57
218737	145	33
218739	83	36
218740	83	37
218742	77	02
218743	77	11
218744	77	05
218744	77	08
218747	19	43
218748	55	08
218751	19	44
218754	177	23
218755	143	04
218757	37	55
218768	123	06
218770	145	78
218771	145	77
218772	77	09
218773	43	08
218773	87	21
218775	87	24
218777	73	28
218777	73	34
218778	73	32
218778	73	35
218779	73	33
218782	73	30
218783	73	50
218785	87	15
218786	73	38
218787	83	19
218788	143	21
218789	147	58
218790	171	45
218793	147	49
218796	147	51
218797	73	40
218798	73	41
218799	41	29
218799	43	10
218799	53	53
218800	47	15
218806	141	05
218810	81	47
218811	171	35
218811	171	44
218811	177	27
218812	147	70
218815	147	40

Part No.	Page No.	Ref. No.
218816	123	20
218816	123	24
218817	47	07
218817	49	53
218817	51	18
218817	121	28
218817	123	02
218817	123	16
218817	123	21
218821	49	16
218821	51	16
218822	171	24
218825	177	28
218828	67	57
218829	179	104
218830	179	105
218833	143	23
218837	147	72
218841	55	09
218842	205	12
218843	204	12
218845	205	07
218848	121	27
218856	73	29
218856	73	31
218856	73	51
218857	57	29
218857	145	31
218862	143	08
218863	143	07
218865	165	01
218869	77	07
218870	77	06
218871	173	17
218871	175	05
218871	175	28
218872	173	20
218872	175	61
218872	201	60
218873	173	18
218873	175	04
218874	77	12
218877	73	27
218878	73	49
218879	175	30
218880	175	29
218881	175	07
218882	175	06
218884	83	27
218886	83	30
218887	117	09
218888	175	34
218890	119	15
218891	119	13
218893	27	82
218893	29	82
218894	67	08
218895	27	83
218895	29	83
218897	119	06
218897	119	16
218898	75	01
218899	75	04
218900	75	05
218901	75	03
218902	75	02
218903	75	06
218904	75	07
218905	171	20
218905	182	01
218905	183	01
218906	69	02
218906	143	18
218907	69	10
218907	143	16
218907	143	17
218908	148	01
218909	156	01
218911	73	45
218912	173	01
218912	189	01
218914	73	24
218915	204	18
218917	57	36
218924	125	16
218929	121	26
218932	121	71
218934	121	29
218934	121	87
218937	59	09
218937	81	30
218937	127	05
218940	47	16
218944	119	09
218944	119	10
218945	73	18
218946	165	55
218947	75	08
218949	73	42
218951	53	05
218951	57	27
218952	59	03
218953	59	04
218954	123	01
218954	123	13
218955	67	39
218956	67	52
218957	59	14
218957	67	38
218958	55	00
218958	67	49
218959	55	00
218959	67	48
218960	59	15
218960	67	42
218962	73	48
218963	179	35
218966	73	09
218967	119	14
218968	119	12
218969	119	01
218970	119	05
218971	119	04
218972	119	03
218973	119	02
218974	79	02
218975	119	26
218976	119	21
218976	119	24
218977	119	22
218978	117	17
218979	125	06
218980	125	01
218981	125	25
218983	73	06
218984	73	26
218985	73	25
218986	67	45
218987	67	46
218988	67	47
218990	47	21
218996	49	06
218996	51	06
218997	123	10
218999	39	03
219000	142	05
219000	148	02
219000	156	08
219002	205	08
219005	47	03
219005	47	04
219007	171	46
219019	117	27
219020	138	08
219021	27	08
219021	27	29
219021	29	08
219021	29	29
219021	47	17
219021	67	43
219021	67	50
219021	73	52
219021	81	44
219021	85	41
219021	123	14
219021	123	25
219021	147	26
219022	13	25
219022	19	12
219022	67	07
219022	73	21
219022	147	77
219022	181	14
219022	201	16
219023	55	05
219023	65	06
219023	71	14
219023	81	08
219023	145	16
219023	145	88
219024	173	03
219025	39	12
219026	55	06
219026	81	06
219028	41	03
219028	41	05
219028	41	11
219028	43	03
219028	67	18
219028	81	59
219028	81	61
219028	121	25
219028	121	86
219028	145	20
219028	179	61
219028	179	106
219029	13	31
219029	19	07
219030	117	06
219034	27	44
219034	29	44
219036	87	39
219036	199	13
219038	79	19
219038	165	51
219039	204	13
219040	83	31
219040	83	38
219041	31	11
219042	83	21
219043	173	19
219043	175	60
219044	182	19
219044	187	20
219045	147	46
219045	147	66
219045	197	21
219046	175	38
219047	27	84
219047	29	84
219047	199	14
219048	83	05
219048	83	15
219048	125	11
219050	47	20
219050	117	07
219050	125	21
219050	169	28
219050	179	23
219051	49	24
219051	121	84
219051	147	18

Part No.	Page No.	Ref. No.
219051	147	29
219051	179	60
219051	179	97
219051	179	103
219052	13	42
219052	13	86
219052	19	11
219052	85	42
219052	123	15
219053	41	09
219053	77	03
219053	125	05
219054	11	29
219054	13	89
219054	19	24
219054	21	25
219054	13	92
219054	13	97
219054	17	20
219054	41	23
219054	47	13
219054	49	08
219054	49	12
219054	49	15
219054	51	08
219054	51	12
219054	51	15
219054	65	29
219054	69	05
219054	73	44
219054	79	23
219054	81	48
219054	85	09
219054	85	31
219054	123	04
219054	123	08
219054	123	12
219054	123	18
219054	123	23
219054	123	30
219054	145	11
219054	147	14
219054	147	53
219054	147	75
219054	165	68
219054	171	09
219054	171	19
219054	173	09
219054	175	21
219054	175	54
219054	179	74
219054	201	06
219054	201	08
219055	17	07
219055	17	17
219055	17	19
219055	21	31
219055	21	39
219055	39	09
219055	41	22
219055	47	12
219055	49	11
219055	51	11
219055	65	31
219055	65	45
219055	79	22
219055	85	30
219055	87	12
219055	87	14
219055	87	19
219055	87	32
219055	117	12
219055	143	13
219055	147	52
219055	175	02
219055	179	73
219055	201	01
219058	13	21
219058	73	47
219060	145	19
219061	165	65
219062	117	05
219063	83	04
219063	83	14
219063	125	10
219063	125	31
219063	125	40
219063	179	12
219064	83	23
219066	179	27
219067	165	38
219067	171	25
219067	175	59
219067	177	14
219068	27	31
219068	29	31
219069	49	21
219069	51	23
219069	65	47
219070	27	06
219070	29	06
219070	55	25
219070	67	40
219070	73	19
219071	81	60
219072	101	12
219072	101	24
219072	105	08
219072	121	68
219073	101	06
219074	107	03
219074	107	07
219074	107	11
219075	107	04
219075	107	08
219075	107	12
219076	103	08
219077	131	14
219078	131	42
219079	95	07
219081	87	36
219081	108	11
219081	109	03
219081	111	09
219081	121	66
219082	103	09
219082	131	15
219083	133	63
219084	81	37
219084	103	06
219084	121	45
219085	89	20
219085	95	10
219085	121	43
219086	121	50
219089	106	04
219090	95	05
219090	103	15
219090	105	04
219090	105	18
219090	108	08
219090	121	40
219091	103	17
219093	101	03
219094	99	13
219095	95	06
219097	91	20
219098	91	21
219099	91	22
219100	103	04
219101	81	32
219102	81	33
219103	101	28
219104	103	12
219105	93	06
219107	89	16
219110	195	16
219111	195	03
219112	195	15
219113	195	12
219115	195	14
219116	195	13
219117	195	05
219118	195	10
219119	195	04
219120	195	07
219121	195	06
219122	195	08
219123	195	11
219124	195	02
219125	106	03
219126	195	09
219127	95	04
219127	101	29
219127	106	05
219128	109	02
219131	27	14
219131	29	14
219140	121	31
219141	103	14
219143	153	13
219143	161	13
219144	149	03
219144	157	03
219145	121	22
219146	55	04
219148	147	32
219148	147	37
219148	171	11
219148	201	25
219149	171	13
219149	173	10
219150	13	58
219150	87	41
219150	145	87
219151	179	15
219152	117	21
219152	179	38
219153	31	08
219154	31	05
219155	31	04
219156	145	67
219156	145	80
219156	145	82
219156	147	21
219156	181	35
219156	181	56
219157	165	54
219157	181	06
219158	191	12
219159	49	03
219159	49	55
219159	51	03
219159	51	20
219159	73	07
219159	73	10
219159	73	22
219159	165	11
219161	182	11
219162	182	10
219163	81	04
219166	147	55
219166	197	34
219168	39	14
219168	41	30
219168	53	58
219168	65	52
219168	169	16
219169	41	34
219169	81	57
219169	108	06
219169	119	18

Part No.	Page No.	Ref. No.
219169	119	25
219169	181	45
219169	201	58
219171	23	10
219171	145	73
219174	19	42
219174	21	44
219176	187	07
219182	189	12
219183	189	08
219184	21	26
219184	49	14
219184	51	14
219184	65	28
219184	73	43
219184	73	61
219184	85	46
219184	117	11
219184	119	19
219184	123	11
219184	143	10
219184	145	10
219184	165	67
219185	13	16
219186	19	21
219188	103	11
219188	108	04
219189	103	10
219190	99	10
219191	105	06
219192	43	02
219192	137	03
219192	137	32
219193	137	06
219194	137	08
219195	137	07
219195	137	36
219196	137	05
219196	137	34
219197	137	11
219197	137	30
219198	137	29
219198	133	39
219198	137	33
219199	137	14
219199	137	24
219200	131	10
219200	137	22
219200	137	46
219201	131	09
219201	137	21
219201	137	45
219202	137	37
219203	137	38
219204	41	35
219204	81	58
219204	137	39
219205	137	40
219205	137	48
219206	137	41
219207	137	35
219208	137	20
219209	137	19
219210	137	17
219211	137	18
219212	137	31
219213	131	40
219214	131	41
219215	133	40
219217	131	57
219218	131	56
219219	131	58
219220	141	03
219222	189	13
219223	131	03
219223	133	64
219224	65	15
219225	65	16
219226	65	19
219227	65	17
219228	65	18
219229	182	05
219229	183	05
219235	11	20
219236	121	52
219237	21	20
219242	13	20
219243	13	15
219244	19	25
219245	13	30
219246	13	41
219247	13	59
219248	13	61
219249	13	60
219250	19	02
219250	19	33
219250	19	36
219250	19	55
219251	21	12
219255	13	19
219256	11	11
219259	13	62
219260	85	18
219261	85	16
219261	85	19
219262	57	49
219262	127	06
219262	131	37
219266	19	13
219266	23	09
219266	23	16
219268	145	18
219269	41	06
219269	81	63
219269	125	35
219269	156	07
219270	119	07
219271	19	46
219272	182	09
219273	21	36
219274	19	08
219276	21	34
219278	189	15
219280	131	02
219281	131	05
219282	131	35
219282	131	54
219283	131	55
219285	133	24
219286	131	27
219287	133	46
219288	133	57
219289	133	38
219291	133	28
219292	133	55
219294	133	19
219295	133	05
219296	133	25
219297	133	15
219298	133	14
219299	133	12
219300	133	13
219301	133	18
219302	133	17
219303	133	16
219309	133	59
219310	133	58
219311	133	22
219312	133	51
219312	137	09
219313	133	66
219314	133	67
219315	133	60
219316	133	61
219317	131	49
219318	131	51
219320	131	30
219321	131	46
219323	131	29
219324	131	19
219324	135	07
219325	131	44
219327	131	31
219328	131	26
219329	135	05
219331	131	47
219332	131	45
219333	131	48
219334	135	06
219335	11	00
219335	13	95
219337	19	09
219338	19	52
219339	11	43
219340	150	05
219340	158	03
219341	151	07
219341	159	01
219342	151	24
219342	159	05
219343	153	14
219343	161	14
219344	159	09
219345	159	10
219347	151	20
219347	159	12
219348	151	21
219348	159	13
219350	159	15
219351	151	09
219351	159	18
219353	151	06
219353	159	24
219354	153	21
219354	161	21
219355	153	22
219355	161	22
219356	153	30
219356	161	30
219357	153	40
219357	161	40
219358	153	41
219358	161	41
219359	153	42
219359	161	42
219360	153	37
219360	161	37
219361	153	38
219361	161	38
219362	153	34
219362	161	34
219363	153	39
219363	161	39
219364	155	01
219364	163	01
219365	155	05
219365	163	05
219366	155	06
219366	163	06
219367	155	07
219367	163	07
219368	155	08
219368	163	08
219369	155	09
219369	163	09
219370	155	10
219370	163	10
219371	149	01
219371	157	01
219372	150	02
219372	158	02
219374	153	02

Part No.	Page No.	Ref. No.
219374	161	02
219375	153	10
219375	161	10
219376	189	14
219380	133	26
219381	133	01
219382	133	20
219383	131	12
219384	131	32
219385	149	07
219385	157	07
219386	103	05
219395	182	08
219396	182	04
219397	182	17
219398	182	20
219399	182	21
219400	182	18
219402	151	25
219403	189	10
219404	153	11
219404	161	11
219405	91	09
219405	91	10
219406	93	02
219406	93	03
219407	93	12
219407	93	17
219408	81	34
219411	87	09
219412	31	09
219413	31	10
219418	87	08
219419	87	43
219420	87	42
219421	89	07
219422	49	25
219422	51	28
219422	59	21
219422	67	19
219422	145	22
219422	147	19
219422	179	107
219423	31	02
219424	31	07
219425	108	09
219426	131	01
219427	131	11
219428	133	52
219429	133	54
219430	133	48
219431	131	20
219432	131	61
219433	131	59
219434	137	26
219435	141	02
219438	137	02
219439	137	16
219440	137	15
219441	137	27
219442	137	25
219443	137	12
219444	53	37
219445	53	35
219446	53	22
219450	53	33
219452	15	03
219452	53	49
219461	11	08
219462	57	59
219463	11	15
219464	11	16
219464	11	40
219464	19	04
219464	19	17
219464	19	41
219464	19	49
219464	21	07
219464	21	13
219464	21	19
219467	11	25
219467	13	90
219468	11	34
219470	13	07
219471	13	08
219472	13	10
219473	13	17
219474	13	85
219474	19	39
219475	13	24
219476	13	27
219481	13	76
219482	19	03
219484	19	18
219485	19	30
219486	19	34
219487	19	05
219487	19	40
219487	21	14
219489	21	09
219490	21	15
219494	65	37
219495	65	36
219496	65	35
219499	153	05
219499	161	05
219501	155	04
219501	155	14
219501	163	04
219501	163	14
219512	137	13
219513	37	01
219514	37	02
219515	37	03
219516	37	04
219517	37	08
219519	37	12
219519	37	15
219520	37	14
219520	37	30
219522	37	17
219523	37	16
219524	37	19
219525	37	20
219526	37	22
219527	37	28
219528	37	26
219529	37	24
219530	37	25
219531	37	29
219533	37	37
219534	37	38
219535	37	41
219536	37	35
219537	37	44
219539	37	50
219542	37	54
219544	53	39
219545	153	35
219545	161	35
219546	149	04
219547	149	05
219547	157	05
219548	149	06
219548	157	06
219549	157	04
219550	37	07
219550	37	56
219552	37	27
219559	153	19
219559	161	19
219560	153	18
219560	161	18
219591	67	27
219592	131	75
219593	131	76
219594	131	77
219595	11	26
219595	153	23
219595	161	23
219599	13	09
219600	13	88
219602	19	28
219603	21	02
219603	57	32
219608	153	36
219608	161	36
219609	73	03
219609	121	06
219610	21	32
219610	49	07
219610	51	07
219610	83	28
219610	123	03
219610	123	07
219610	123	17
219610	123	22
219610	147	73
219610	179	05
219610	179	42
219610	199	16
219611	65	11
219613	59	19
219613	121	85
219613	125	33
219613	147	28
219614	83	12
219614	125	09
219615	73	12
219616	11	55
219616	21	30
219616	47	08
219616	49	09
219616	51	09
219616	67	29
219616	69	06
219616	85	10
219616	85	32
219616	87	18
219616	87	23
219616	87	29
219616	117	14
219616	123	05
219616	123	19
219616	147	15
219616	147	59
219616	147	76
219616	175	50
219616	175	56
219616	197	05
219616	199	18
219616	201	07
219616	201	62
219617	47	09
219617	145	76
219617	147	69
219617	171	42
219618	41	39
219618	171	08
219618	171	18
219618	171	37
219618	173	08
219618	175	22
219619	119	17
219619	197	09
219620	179	102
219621	179	95
219623	125	20
219623	179	06
219625	83	06
219626	83	02
219626	125	29

Part No.	Page No.	Ref. No.
219626	179	10
219627	125	04
219628	73	04
219629	41	08
219629	125	02
219629	125	07
219630	73	02
219630	121	05
219631	165	07
219631	165	49
219632	131	78
219633	131	79
219635	151	13
219635	159	03
219636	159	25
219638	153	15
219638	161	15
219640	153	44
219640	161	44
219641	153	50
219641	161	50
219642	153	51
219642	161	51
219644	112	03
219646	19	29
219648	57	50
219648	131	18
219648	135	01
219649	158	04
219650	13	32
219651	11	33
219652	37	18
219653	11	36
219654	19	35
219656	151	23
219656	159	08
219657	153	32
219657	161	32
219658	153	03
219658	161	03
219659	158	09
219660	161	52
219664	13	02
219665	13	04
219665	19	38
219666	13	87
219668	13	77
219669	19	19
219669	21	01
219669	21	16
219669	21	33
219670	19	20
219672	189	07
219674	182	16
219676	145	32
219677	145	34
219679	151	22
219681	150	04
219681	158	07
219682	155	03
219682	163	03
219683	137	43
219684	9	04
219686	13	78
219687	13	79
219688	13	82
219689	117	32
219690	153	46
219690	161	46
219691	53	54
219691	199	06
219692	19	57
219693	19	58
219697	189	02
219699	49	23
219699	51	26
219699	121	24
219699	165	39
219699	171	47
219699	175	58
219699	177	13
219700	150	06
219700	153	28
219700	158	05
219700	161	28
219701	150	07
219701	153	27
219701	158	08
219701	161	27
219702	153	24
219702	161	24
219703	153	12
219703	161	12
219704	153	26
219704	161	25
219705	153	25
219705	161	26
219706	150	03
219707	182	13
219708	182	15
219709	182	14
219710	57	61
219710	149	02
219710	157	02
219711	99	11
219712	153	49
219712	161	49
219713	107	01
219714	153	29
219714	161	29
219715	89	01
219716	89	04
219717	89	12
219718	89	08
219719	89	13
219720	89	11
219721	89	06
219722	89	05
219723	89	15
219724	89	17
219725	89	18
219726	89	14
219729	91	03
219733	91	12
219734	91	13
219735	91	14
219736	91	15
219737	91	16
219738	91	17
219739	91	18
219740	91	19
219741	91	08
219743	93	04
219744	93	05
219745	93	08
219749	93	13
219750	93	18
219751	93	19
219752	93	21
219753	93	22
219754	93	23
219755	93	24
219756	93	25
219759	97	01
219760	97	02
219761	97	03
219762	97	08
219763	97	07
219764	97	04
219765	97	11
219766	97	12
219767	97	13
219768	97	14
219770	101	13
219771	101	14
219772	101	15
219773	101	16
219774	101	17
219775	101	19
219777	101	21
219779	101	05
219780	103	01
219781	103	02
219782	103	03
219783	103	13
219785	99	01
219787	99	03
219787	99	16
219788	99	04
219789	99	05
219790	99	06
219790	169	11
219791	99	07
219792	99	08
219793	99	09
219794	99	12
219796	99	15
219797	99	17
219797	99	25
219799	105	02
219799	105	20
219801	105	07
219802	105	09
219803	105	10
219804	105	11
219805	105	12
219806	95	11
219809	95	09
219810	106	01
219811	106	02
219812	106	06
219814	112	02
219816	108	02
219817	108	03
219818	108	07
219819	59	02
219819	109	01
219820	108	12
219821	59	12
219821	121	30
219823	121	32
219824	121	34
219827	121	41
219829	121	42
219837	121	54
219839	59	08
219839	121	56
219843	121	61
219843	121	79
219843	121	80
219848	142	04
219849	65	04
219849	145	14
219850	27	81
219850	29	81
219851	73	14
219851	125	13
219852	175	10
219853	145	21
219854	189	04
219856	125	30
219856	125	39
219856	165	72
219857	79	08
219857	79	12
219859	189	03
219860	73	17
219860	73	37
219861	21	28
219861	39	07
219861	165	66
219861	169	20

Part No.	Page No.	Ref. No.
219863	125	36
219863	145	28
219864	179	18
219865	19	26
219866	19	23
219867	17	18
219867	39	08
219867	39	10
219867	65	32
219867	73	60
219867	87	13
219867	87	17
219867	87	22
219867	87	33
219867	87	46
219867	117	13
219867	143	11
219867	197	04
219867	199	17
219868	41	04
219868	83	07
219868	121	82
219868	147	17
219868	179	59
219869	47	19
219869	125	17
219870	83	09
219870	125	26
219870	179	08
219870	179	22
219872	85	08
219872	123	29
219872	147	13
219872	175	33
219872	181	42
219872	201	14
219874	101	08
219874	101	34
219875	101	07
219876	31	03
219878	121	67
219881	101	27
219883	153	04
219883	161	04
219884	158	10
219885	21	18
219885	21	40
219887	53	50
219895	153	53
219895	161	54
219897	153	55
219897	161	56
219898	151	28
219899	179	91
219900	27	57
219900	29	57
219901	13	53
219901	13	80
219902	11	37
219902	13	54
219902	13	81
219903	13	44
219904	129	08
219905	129	09
219905	179	49
219906	165	06
219906	165	48
219907	67	17
219908	117	04
219910	117	10
219911	79	03
219911	79	07
219913	177	29
219913	197	17
219915	125	32
219916	125	37
219917	53	43
219918	179	07
219918	179	09
219918	179	11
219919	83	10
219919	83	13
219919	125	18
219919	125	27
219919	179	36
219920	73	63
219920	143	19
219923	145	63
219925	27	17
219925	29	17
219926	37	21
219926	65	05
219926	65	14
219926	71	13
219926	87	40
219926	145	15
219927	73	05
219927	73	15
219927	125	15
219929	53	16
219929	71	09
219929	181	04
219929	199	07
219933	65	50
219934	49	02
219934	49	05
219934	51	02
219934	51	05
219934	123	09
219934	123	28
219935	41	21
219935	47	11
219935	51	10
219936	35	07
219937	7	04
219937	179	16
219939	55	19
219940	145	62
219943	169	09
219945	7	03
219945	179	19
219947	7	05
219947	37	36
219948	39	16
219948	55	20
219948	199	08
219949	55	11
219950	39	17
219950	55	12
219951	55	13
219951	199	09
219951	201	37
219952	15	05
219952	55	14
219952	55	23
219952	167	01
219953	55	18
219954	57	31
219954	65	02
219954	145	13
219956	7	08
219956	83	34
219957	171	15
219957	175	19
219958	55	17
219958	201	36
219961	173	05
219965	117	26
219967	87	03
219968	87	25
219970	117	18
219971	31	01
219973	55	15
219974	55	16
219975	7	09
219975	105	13
219976	7	11
219976	131	24
219978	182	23
219979	7	02
219979	87	06
219980	7	01
219980	87	07
219984	171	16
219984	175	20
219986	59	11
219986	121	70
219986	127	03
219987	145	25
219988	173	06
219989	189	16
219990	187	22
219991	99	02
219993	59	07
219993	108	01
219995	59	18
219995	121	55
219995	127	01
219996	7	06
219996	81	28
219997	113	02
219999	113	01
L65924	204	10
L65927	205	05
L65928	204	03
L65928	205	06
L65932	204	04
L70306	204	08
L70307	204	01

Page

A

A/C Compressor 41, 85
Accumulator 179, 197
Adapter, Brake Hose 145
Adapter, Locking 23
Air Breather, Valve Cover 99
Air Conditioner 21, 39
Air Conditioner Assembly 37
Air Conditioning Compressor Belt 7
Air Diffuser (Vent) 27, 29
Air Filter 87
Air Filter Bracket 87
Air Filter Cartridge 7, 87
Air Filter Sensor 59, 67
Air Spring 13, 73
Alternator 59, 108
Alternator Belt 7, 81
AM/FM Radio 53
Antenna 53
Arm Rest 27, 29
Auto-Clean Pre-Filter 7, 87
Axle 153, 161
Axle Plate 79
Axle, Front 148
Axle, Rear 156

B

Back Door, Complete 19
Back Pressure Valve 37
Backrest 25
Balancing Valve 175, 193
Battery 59, 67
Blower Assembly 37
Boom, Outer 165
Bracket, Brake Reservoir 145
Bracket, Cab Light 49, 51
Bracket, Dipstick 81
Bracket, Frame Level Indicator 27, 29
Bracket, Fuel Filter Mount 121
Bracket, Headliner 27, 29
Bracket, Rear Cab Light 49
Bracket, Relay 53
Brake Assembly 131
Brake Disc 155, 163

Page

Brake Fluid Tank 57, 145
Brake Pedal 145
Bulb, Domelight 27, 29
Button / LED Harness 71
Buzzer 55

C

Cab 13, 17
Cab Air Filter 7, 37
Cab Light 49, 51
Cam, hood latch 73
Camshaft 101
Center Console w/Arm Rest 27, 29
Cigarette Lighter 53, 57
Circuit Breaker 41
Clock 53, 57
Clutch Disc 133, 151
Condenser, A/C 27, 43, 45
Console, Front 27, 29
Console, Lower 27, 29
Console, Rear 27, 29
Control Valve 181
Controller, Multi-function 33, 181
Converter 129
Crankshaft, Engine 91
Cylinder Block, Engine 89
Cylinder Head, Engine 93
Cylinder, Carriage Lock 169, 191
Cylinder, Extend 189
Cylinder, Lift 171, 182, 183
Cylinder, Slave 177, 185
Cylinder, Tilt 186

D

Damper 25
Dash Panel 27, 29
Decal 204, 205
Deflector 73
Defogging Switch 15, 57
Differential Housing 151, 159
Differential, Rear Axle 159
Diode 63, 199
Door Glass 13
Door Handle 13

Page

Door Lock 11, 13
Door Strap 13
Door, Lower 11, 13
Door, Side 11, 13
Drain Plug 81, 121, 131, 179
Drier Filter, A/C 45
Drive 193
Driveshaft Assembly 141
Driveshaft, Front 138
Driveshaft, Rear 139
Driveshaft, Transfer Case 137, 140
Dust Cover 131

E

Engine Compartment 73
Engine Connecting Rod 91
Engine Fan 85
Engine Hood, Front 73
Engine Hood, Rear 73
Engine Oil Filter 7
Engine Oil Pressure Switch 59, 89, 127
Engine Wire Harness 59
Exhaust Manifold 112
Exhaust pipe 87
Exhaust Valve, Engine 93
Extend Cylinder 173
Extend Cylinder 189

F

Fan Belt 7, 83
Fan Pulley 83
Fan, Blower Motor 45
Fan, Engine 83
Fan, Engine 85
Fender 143
Fender 143
Filler Cap 121
Filter, Hydraulic 179, 193
Filter, In-Line 181
Flap 19
Flasher unit 55
Floor mat 17
Flywheel 107
Fog Light Switch 57

Page

Foot Scuff Plate 17
Frame Level Indicator 27, 29
Front Axle 148
Front Directional Lights 65
Fuel Filter 59, 121
Fuel Filter cartridge 7
Fuel Filter cartridge 121
Fuel Filter Housing 121
Fuel Gauge 59, 121
Fuel Level Sensor 57
Fuel Line 121
Fuel / Water Separator Assembly 7, 121
Fuse 15, 39, 55, 67, 85, 167, 199, 201
Fuse / Relay Box 57
Fuse and Relay Board 39
Fuse Box 59, 67
Fuse Pincers 55, 67
Fuel Tank 121

G

Gasket, Timing Cover 101
Gauge, Fuel Level 53
Gauge, Fuel Level 59, 121
Gauge, Water Temperature 53
Glass Bowl, water separator 121
Glow Plug 59, 127
Glue 11, 13
Grill, Speaker 27, 29
Grill, Windshield 23
Ground Cable 59, 123

H

Hand Brake, Complete 31
Handbrake Switch 57, 65
Handle, Seat 25
Head Light 57
Headlight 65
Headliner 11, 27, 29
Heater/ Engine Block 115
Heating plug 121
Horn 57, 65
Hose Reel 201
Hose, Air Cleaner 87
Hose, Brake Supply 145

Page

Hose, Radiator 117
Hourmeter 53, 57
Housing, Lower Cab A/C 21
Hydraulic Accumulator 179
Hydraulic Filter 7, 9, 179, 193
Hydraulic Pump 179
Hydraulic Tank 179
Hydraulic Valve, Main 193

I

Ignition Switch 57
Injection pump 121
Injector 121
Injector Tube 121
In-Line Hydraulic Filter 7
Inner Boom 165
Instrument Panel 27, 29
Intake Valve, Engine 93

J

Joystick Control Unit 61
Joystick Control Valve 181

K

Key 53, 73, 91, 101, 137
Kit, Steering Column Lock 35

L

Level Indicator Plate 165
Level Plug (Sight Glass) 117
Lever, Tilt Steering 35
Lift Cylinder 171, 182, 183
Lift Cylinder Valve 171
Light Switch 57, 63
Light, Interior Roof 27, 29
Light, Warning 53
Low Pressure Sensor/Switch 37, 197
Low-Pressure Sensor/Switch 171

Page

M

Magnetic Plug 150, 153, 158, 161
Main Hydraulic Valve 179
Main Wire Harness 57, 61
Master Cylinder, Brake 145
Mirror 19
Module 71
Module, Air Conditioning 43
Module, Transmission Cut-Off 53
Muffler 87
Multi-function Controller 33, 181

O

Oil Cooler 105
Oil Cooler Section, Radiator 117
Oil Filter Restriction Switch 57, 67
Oil Filter, Engine 105
Oil Filter, Transmission 131
Oil level 131
Oil Pump, Engine 103
Oil Sump/Pan 103
Oil Temperature Sensor 57, 127, 131
Outer Boom 165

P

Panel, Fuses and Relays 63
Panel, Relay and Fuses 55
Panel, Warning Lights 53
Planetary Wheel 153
Potentiometer Harness 71
Pre-filter, Air Cleaner 7, 87
Pressure Switch 45, 199
Printed Circuit Board 33, 55
Pulley 41, 83, 91, 108
Pump, Hydraulic 179

Q

Quick-Connector, Hydraulic 175

Page

R

Radiator 117
Radiator Cap 117
Radiator Hose, Lower 117
Radiator Hose, Upper 117
Radiator Tank, Upper 117
Radio Box 27, 29
Radio, AM/FM 53
Rear Axle 156
Rear Panel 69
Rear Window 13, 15
Rear Window w/De-icing Grid 15
Rear Windshield-Wiper Switch 57
Rearview Mirror 19, 143
Relay 39, 55, 57, 59, 67, 71, 199, 201
Relief Valve 193
Restriction Indicator Switch 9
Revolving Light / Beacon Switch 57

S

Safety Air Filter Cartridge 7, 87
Seat 25
Seat Belt 25
Shade 21
Shroud 117
Shroud, Radiator 119
Sight Glass, Radiator 117
Slave Cylinder 177, 185
Solenoid 59, 127, 171, 197, 201
Speaker 53
Speaker Grill 27, 29
Spinner, Steering Wheel 27, 29
Starter 59, 109
Steer Motor 35, 147
Steering Case 153, 161
Steering Column 35, 147
Steering Cylinder 149, 157
Steering Wheel 27, 29
Stop Engine Electrovalve 59, 121, 127
Striker 13
Sun Shade 21
Suspension 25
Switch 25, 33, 57, 61, 85, 166, 169, 199, 201
Switch, Boom Lights 167

Page

Switch, Defogging 15, 53, 57
Switch, Fog Light 53, 57
Switch, Hydraulic Carriage Lock 53
Switch, Ignition 53
Switch, Ignition 57
Switch, Light 27, 29, 53, 57, 63
Switch, Rear Windshield-Wiper 57
Switch, Rear Wiper 53
Switch, Revolving Light (Beacon) 27, 29
Switch, Transmission Cut-Off 53
Switch, Warning Light 53
Switch, Wheel Alignment 53
Switch, Windshield Wiper 53

T

Tail Light 57, 67
Tank, Air Cleaner 87
Temperature Control Assembly 37
Temperature Control Cable 37
Temperature Control Valve 37
Thermostat 37
Thermostat Housing 95
Tie Rod 149, 157
Tilt Cylinder 186
Time Switch 85
Top Window 13
Top Window & Seal Mastic 13
Top Windows & Seal Mastic 19
Torque Converter 129
Towing Hook 79
Towing Spindle 79
Transmission 129, 133
Transmission Cooler Hose 117
Transmission Cut-off Module 57
Transmission Cut-off Switch 57, 65, 145
Transmission Oil Filter 6
Transmission Oil Pressure switch 57, 127
Transmission Pump 131
Trim Panel, Lower Door 13
Turbocharger 111

Page

U

Universal Joint 138, 139, 141, 153, 161

V

Valve 87, 142, 147, 169, 171, 173, 191, 193, 197
Valve Cover, Engine 99
Valve Tapper (Lifter) 97
Valve, Main Hydraulic 193

W

Warning Light 57
Warning Light Panel 63
Warning Light Switch 63
Water Pump 106
Water Temperature Gauge 53
Water Temperature Sensor 59, 81, 93, 127
Water Temperature Switch 57
Water / Fuel Separator Filter 121
Wheel Alignment Sensor 57, 149, 157
Window, Cab 11
Windshield Grill 23
Windshield 11
Windshield Washer Tank 21
Windshield Wiper Blade 11, 13
Windshield Wiper Motor 11, 13, 57
Windshield Wiper Switch, Rear 27, 29
Wiper Arm 11, 13
Wire Harness, A/C 37, 41, 43
Wire Harness, Boom Lights 166, 167
Wire Harness, Carriage Lock 169
Wire Harness, Continuous-On Hydraulics 71
Wire Harness, Cylinder Head 93
Wire Harness, Fuel Circuit 121
Wire Harness, Ignition 59
Wire Harness, Joystick 33
Wire Harness, Light/Sensors 65
Wire Harness, Main 57, 61
Wire Harness, Reversible Fan 85
Wire Harness, Ride Control 199
Wire Harness, Safety 71
Wire Harness, Seat Safety Switch 25
Wire Harness, Trailer Connector 69
Wire Harness, Washer-Wiper 21

Page

Wiring Connector / Trailer 69
Work Light 166
Work Light Bracket 167
Work Light, Boom 166, 167
Work Section 61, 193
Work Section, Main Valve 193

Torque Specifications

Use these torque values when tightening hardware (excluding: locknuts and self-tapping, thread-forming and metal screws) unless otherwise specified.

Unified National Thread	Grade 2		Grade 5		Grade 8	
	Dry	Lubed	Dry	Lubed	Dry	Lubed
8-32 8-36	19* 20*	14* 15*	30* 31*	22* 23*	41* 43*	31* 32*
10-24 10-32	27* 31*	21* 23*	43* 49*	32* 36*	60* 68*	45* 51*
1/4-20 1/4-28	66* 76*	50* 56*	9 10	75* 86*	12 14	9 10
5/16-18 5/16-24	11 12	9 9	17 19	13 14	25 25	18 20
3/8-16 3/8-24	20 23	15 17	30 35	23 25	45 50	35 35
7/16-14 7/16-20	32 36	24 27	50 55	35 40	70 80	55 60
1/2-13 1/2-20	35 40	35 40	75 90	55 65	110 120	80 90
9/16-12 9/16-18	55 60	55 60	110 120	80 90	150 170	110 130
5/8-11 5/8-18	75 85	75 85	150 180	110 130	220 240	170 180
3/4-10 3/4-16	130 150	130 150	260 300	200 220	380 420	280 320
7/8-9 7/8-14	125 140	125 140	430 470	320 360	600 660	460 500
1-8 1-14	190 210	190 210	640 710	480 530	900 1000	680 740

Metric Course Thread	Grade 8.8		Grade10.9		Grade12.9	
	Dry	Lubed	Dry	Lubed	Dry	Lubed
M6-1	8	6	11	7	13.5	10*
24M8-1.25	19	14	27	20	32.5	24*
M10-1.5	37.5	28	53	39	64	47
M12-1.75	65	48	91.5	67.5	111.5	82
M14-2	103.5	76.5	145.5	108	176.5	131
M16-2	158.5	117.5	223.5	165.5	271	200

* *All torque values are in lb.-ft., except those marked with an *, which are in lb.-in.*
For metric torque value (Nm) multiply lb.-ft. x 1.355, or lb.-in. value x 0.113.

Gehl Company One Gehl Way, P. O. Box 179, West Bend, WI 53095-0179 U.S.A.

www.gehl.com

913293/EP0809

© 2009 Gehl Company. All Rights Reserved.

PRINTED IN U.S.A.